KCS001

Spice Rack

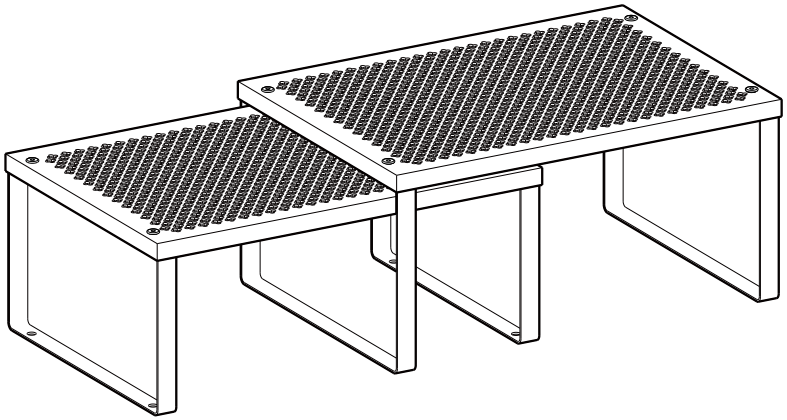

SONGMICS

by SONGMICS HOME

A1 × 1

Small Shelf

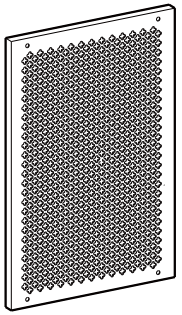

A2 × 2

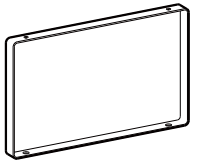

B1 × 1

Large Shelf

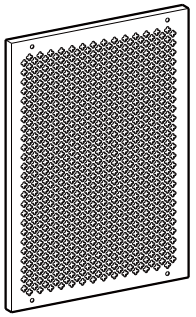

B2 × 2

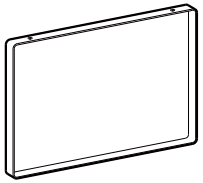

C × 8



M5 × 8 mm

D × 1

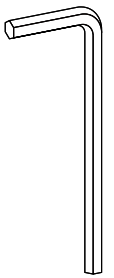

S3

For Stackable

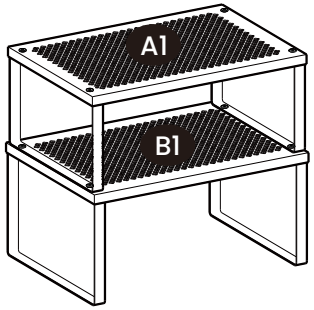

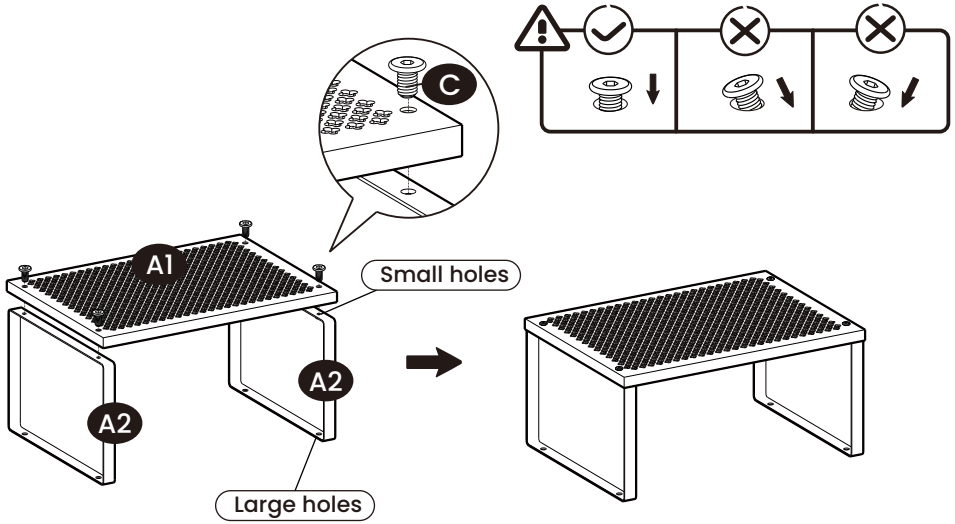

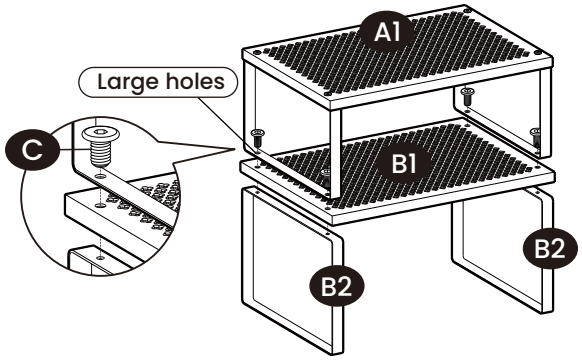

OR

For Expandable

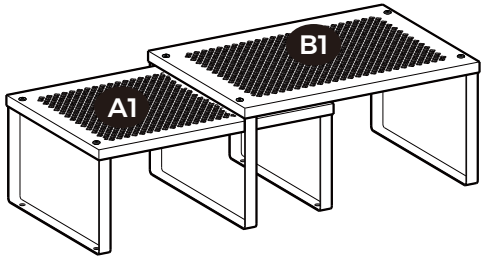

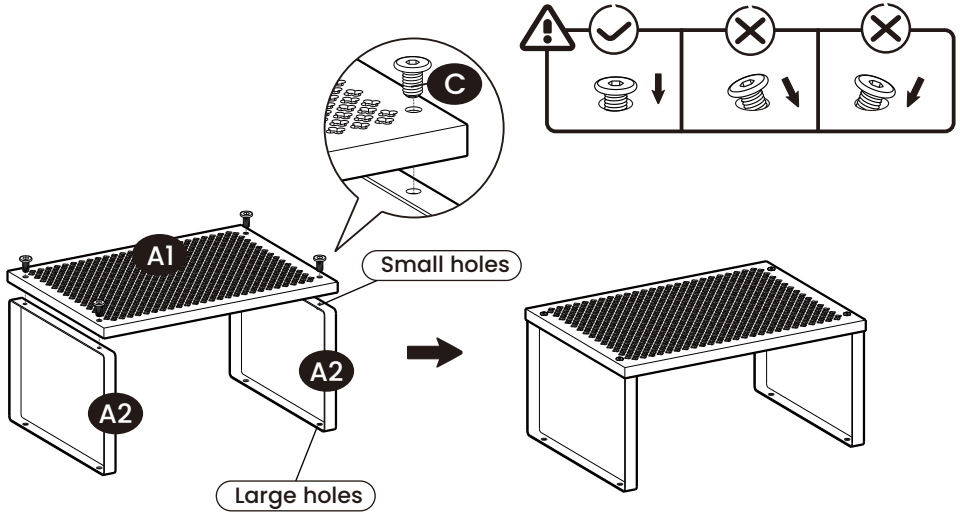

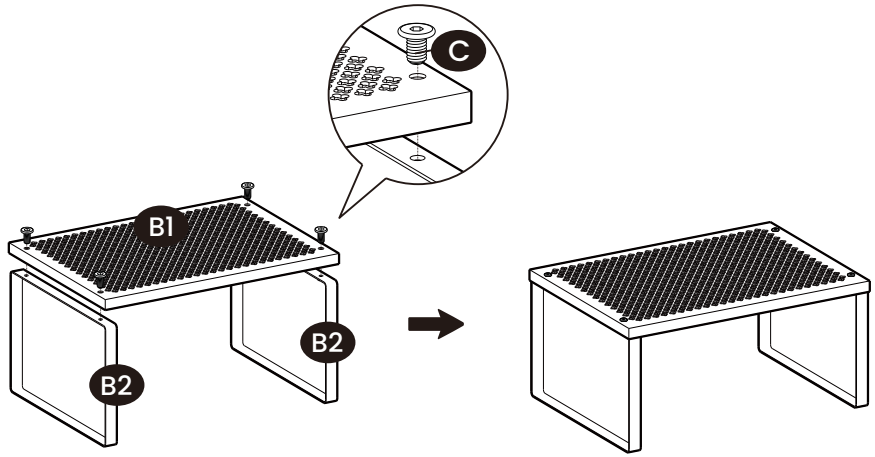

2024.12.25-V6