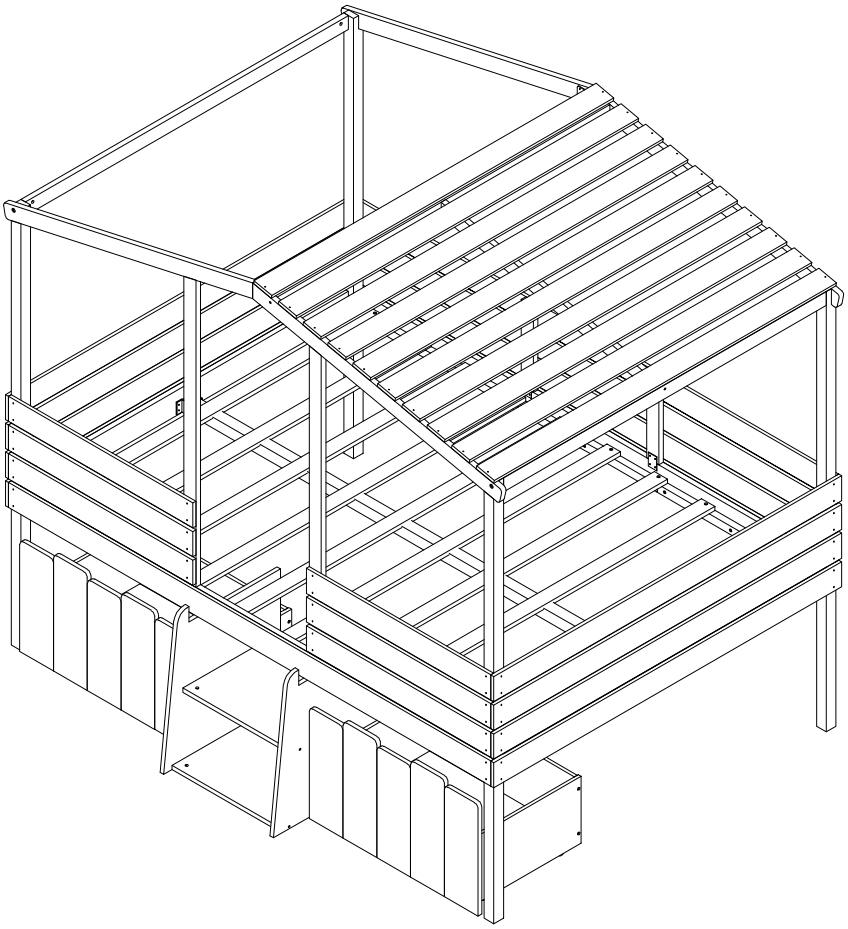
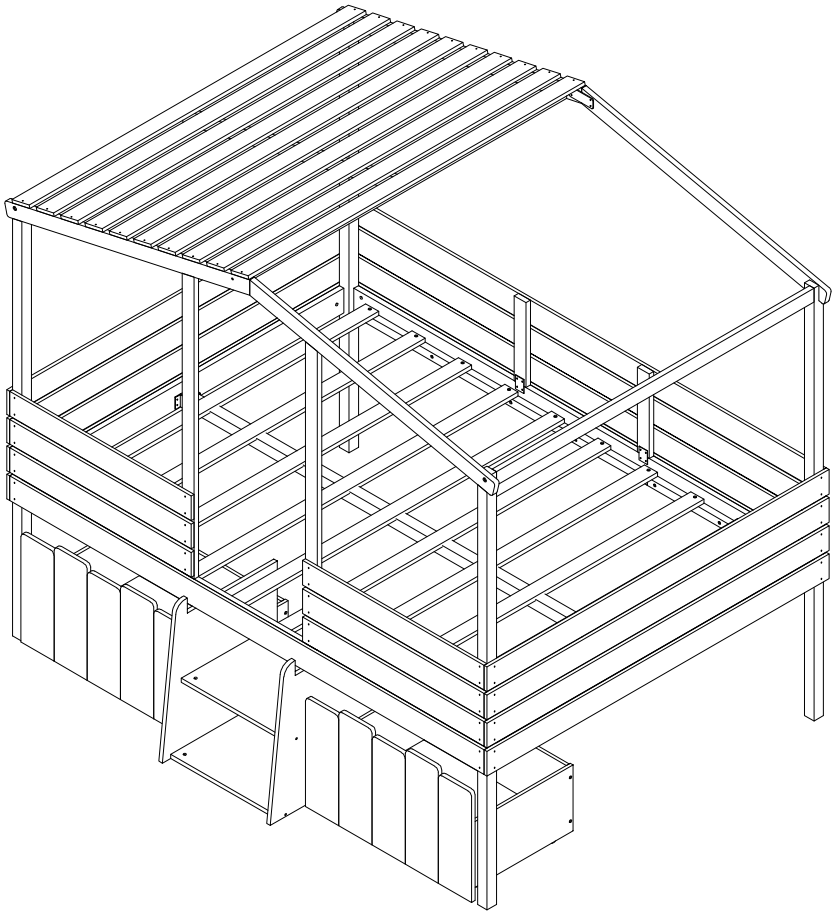
ASSEMBLY INSTRUCTION

SKU CODE: (H000123)

OPTION 1

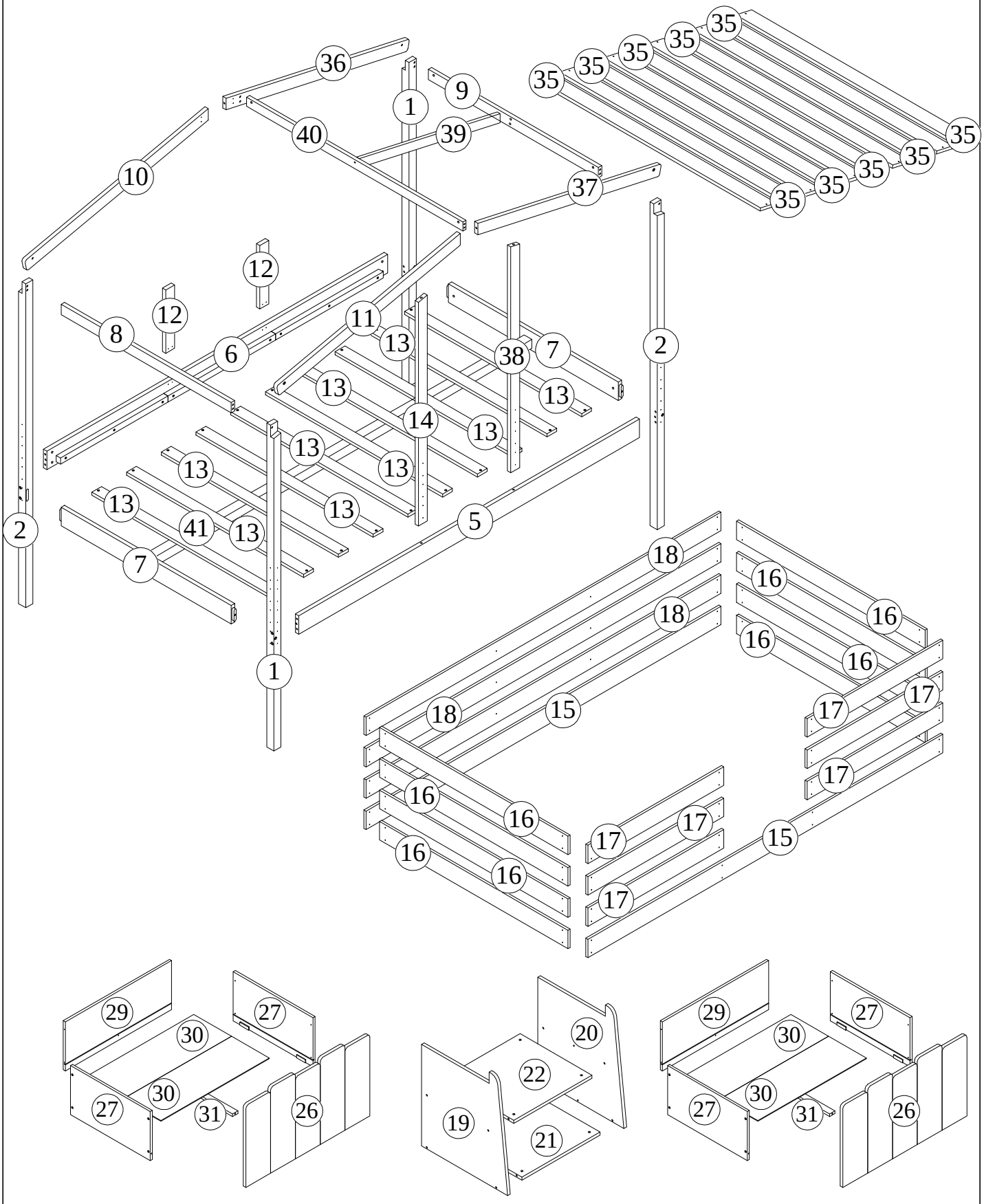


OPTION 2



ASSEMBLY INSTRUCTION

SKU CODE: (H000123)



SAFETY WARNING

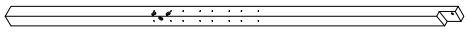
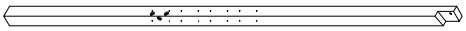
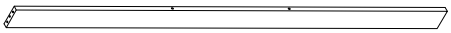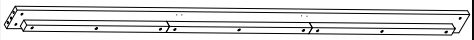
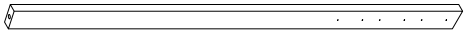
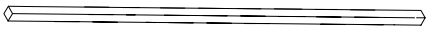
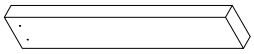
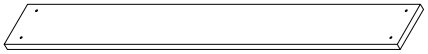
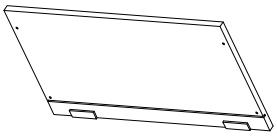
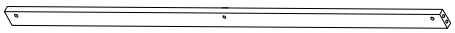
1. This bed is designed for use only mattress (es) meeting the following specifications on the upper bunk, and lower bunk:

Lower bed

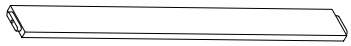
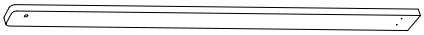
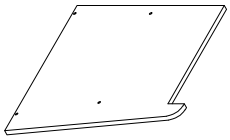
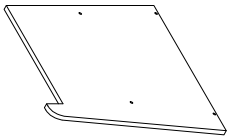
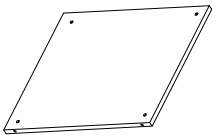
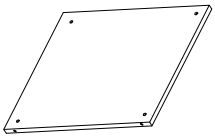
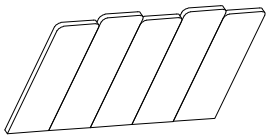
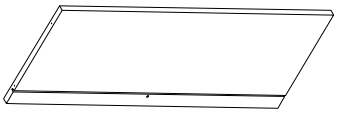
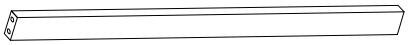
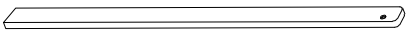
Bed type	Length	Width	Thickness
Full Standard	75"	53"	6" max

2. Replacement parts, including additional guardrails, maybe obtained from any of our (YEUK FUNG GQ INTERNATIONAL LIMITED. ROOM 1602, 16TH FLOOR,, MULTIFIELD COMMERCIAL CENTRE,, 426 SHANGHAI STREET, MONGKOK, KLN, HONG KONG). dealers
3. Follow the information on the warnings appearing on the upper bunk bed end structure and on the carton. Do not remove warning label from bed.
4. Always use the recommended size mattresses or mattress supports, or both, to help prevent the likelihood of entrapment or falls.
5. Surface of mattress must be at least 5" (127mm) below the upper edge of guardrails.
6. Do not allow children under 6 years of age to use the upper bunk.
7. Periodically check and ensure that the guardrail, ladder, and other components are in their proper position, free from damage, and that all connectors are tight.
8. Do not allow horseplay on or under the bed and prohibit jumping on the bed.
9. Always use the ladder for entering and leaving the upper bunk.
10. Do not use substitute part. Contact the manufacture or dealer for replacement part.
11. Use of a night light may provide added safety precaution for a child using the upper bunk.
12. Always use guardrails on both long sides of the upper bunk. If the bunk bed will be placed next to the wall, the guardrail that runs the full length of the bed should be placed against the wall to prevent entrapment between the bed and wall.
13. The use of water or sleep flotation mattresses is prohibited.
14. STRANGULATION HAZARD - Never attach or hang items to any part of the bunk bed that are not designed for use with the bed; for example, but not limited to, hook, belts and jump ropes.
15. Keep these instruction for future reference.
16. Prohibit more than one person on upper bunk
17. We recommend assembling your bunk bed on the shipping carton to protect your floor or carpet.
18. Be certain all staples are out of the box before beginning assembly on the shipping carton.

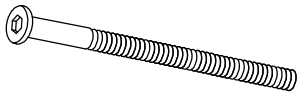
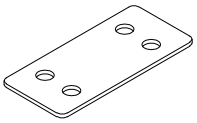
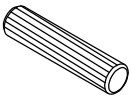
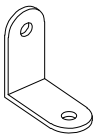
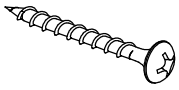
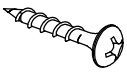
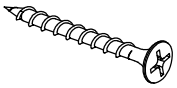
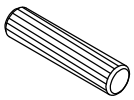
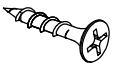
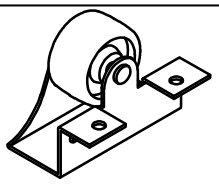
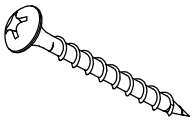
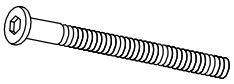
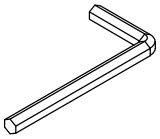
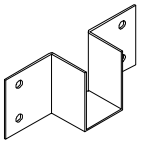
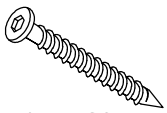
Part List (Box 1-H000123-1)

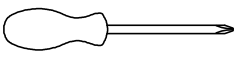
1  Left front leg - 2 pcs	2  Left rear leg - 2 pcs	5  Front bed rail - 1 pc
6  Rear bed rail - 1 pc	8  Upper crossbar - 1 pc	9  Upper crossbar - 1 pc
14  Left front vertical rail - 1 pc	41  Slat support rail - 1 pc	12  Rear vertical rail - 2 pcs
15  Panel - 2 pcs	16  Panel - 8 pcs	17  Panel - 6 pcs
18  Panel - 3 pcs	27  Drawer side panel - 4 pcs	31  Drawer bottom support rail - 2 pcs
38  Right front vertical rail - 1 pc	40  Top panel support rail - 1 pc	

Part List (Box 2-H000123-2)

7  Side bed rail - 2 pcs	13  SLAT - 10 pcs	10  Left rear top rail - 1 pc
19  Left staircase side panel - 1 pc	20  Right staircase side panel - 1 pc	21  Stair tread panel - 1 pc
22  Stair tread panel - 1 pc	26  Drawer front panel - 2 pcs	29  Drawer back pane - 2 pcs
30  Drawer bottom panel - 4 pcs	35  Top panel - 10 pcs	36  Right rear top rail - 1 pc
37  Right front top rail - 1 pc	39  Top cross rail - 1 pc	11  Left front top rail - 1 pc

Hardware List (Box 1 - RH000123-1)

A  Ø1/4" x 80 mm Hex-Head bolts 16 pcs	B  Ø1/4" x 12 mm Horizontal-Hole bolts 26 pcs	C  Straight Steel Panel 6 pcs
D  Straight Steel Panel 2 pcs	E  Ø8 x 30 mm Wood dowel 22 pcs	I  Angle Metal-2 pcs
G  M4 x 25 mm Wood Screws 110 pcs	H  M4 x 15 mm Wood Screws 44 pcs	N  M4 x 25 mm Wood Screws 18 pcs
Z  Ø6 x 30 mm Wood dowel 2 pcs	K  M4 x 15 mm Wood Screws 32 pcs	O  Wheels 8pcs
P  M4 x 35 mm Wood Screws 20 pcs	Q  Ø1/4" x 60 mm Hex-Head bolts 10 pcs	S  Allen Key 2pcs
F  Metal bracket-2 pcs	J  1/4" x60 Screws 2 pcs	

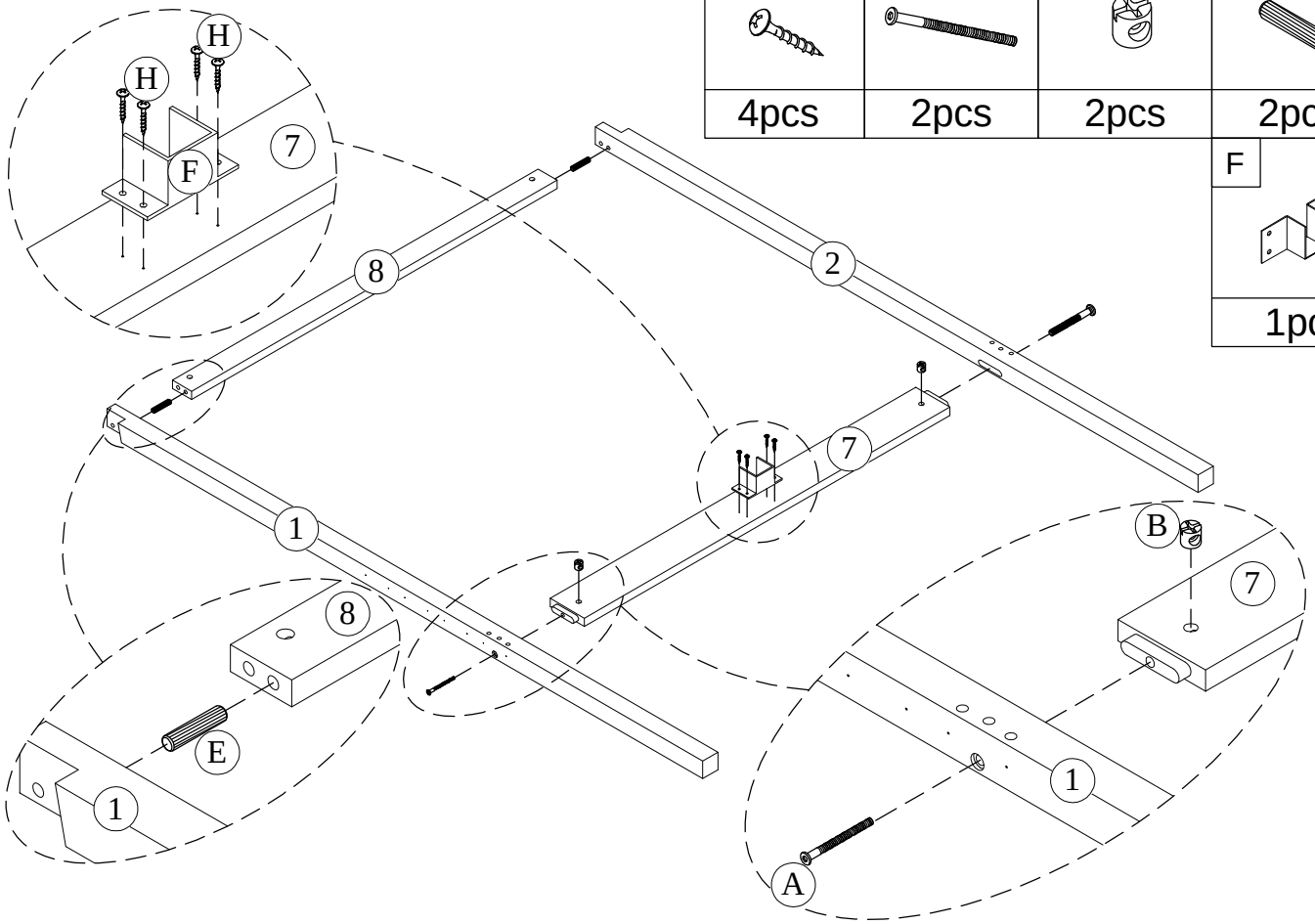


Assembly Tools Required (Not Included)

STEP-1

H	A	B	E
4pcs	2pcs	2pcs	2pcs

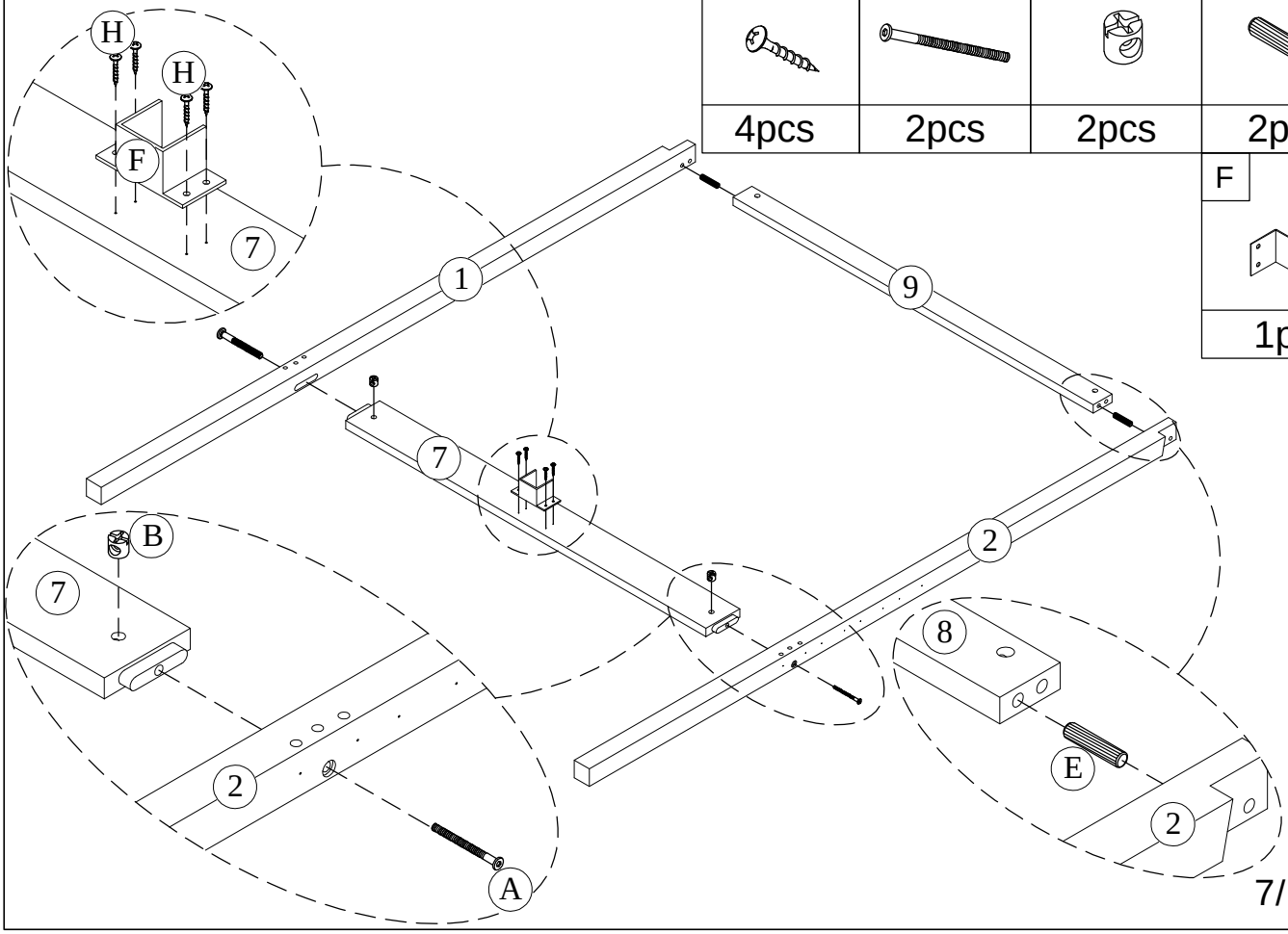
F
1pc



STEP-2

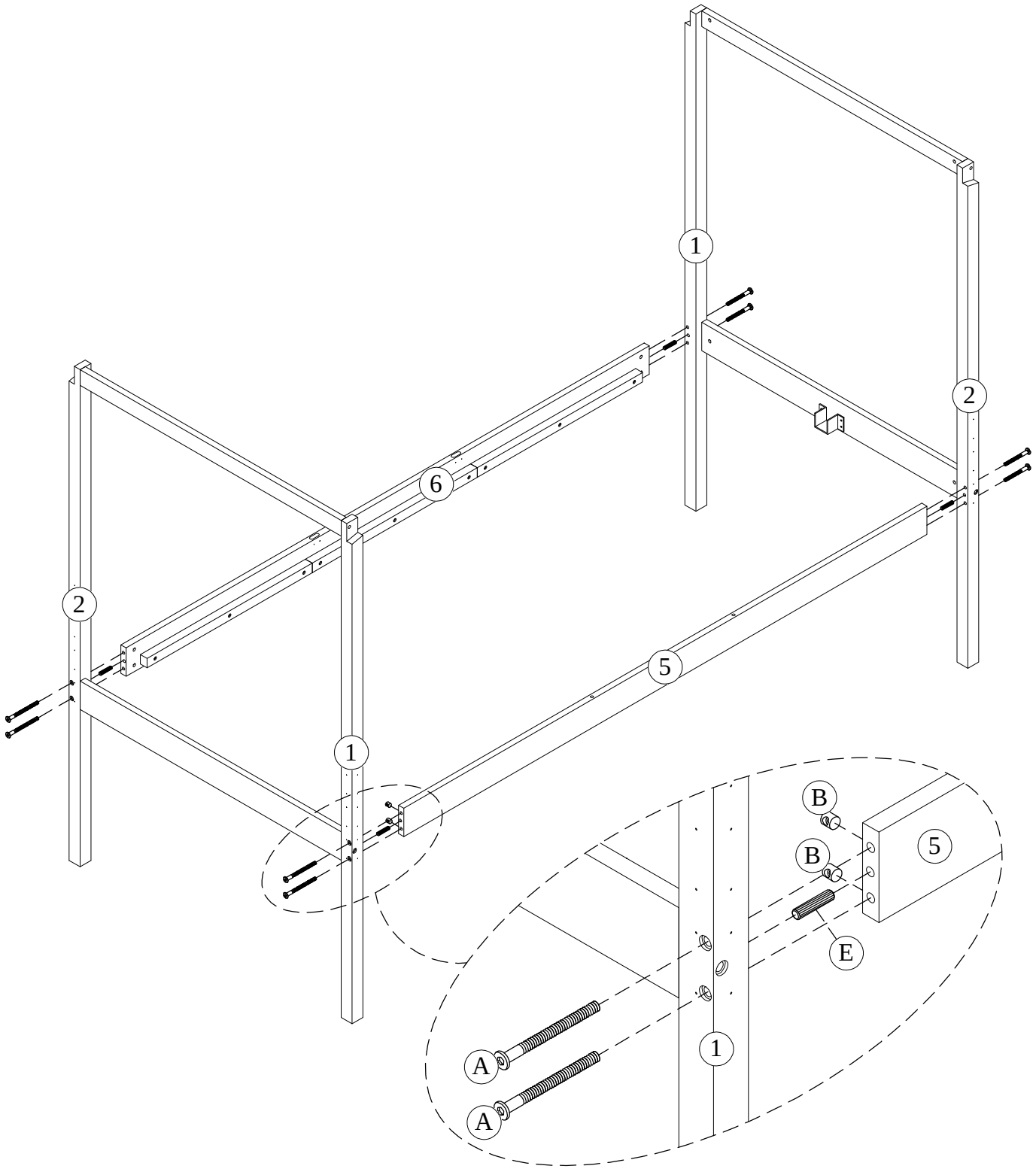
H	A	B	E
4pcs	2pcs	2pcs	2pcs

F
1pc



STEP-3

A	B	E
		
8pcs	8pcs	4pcs

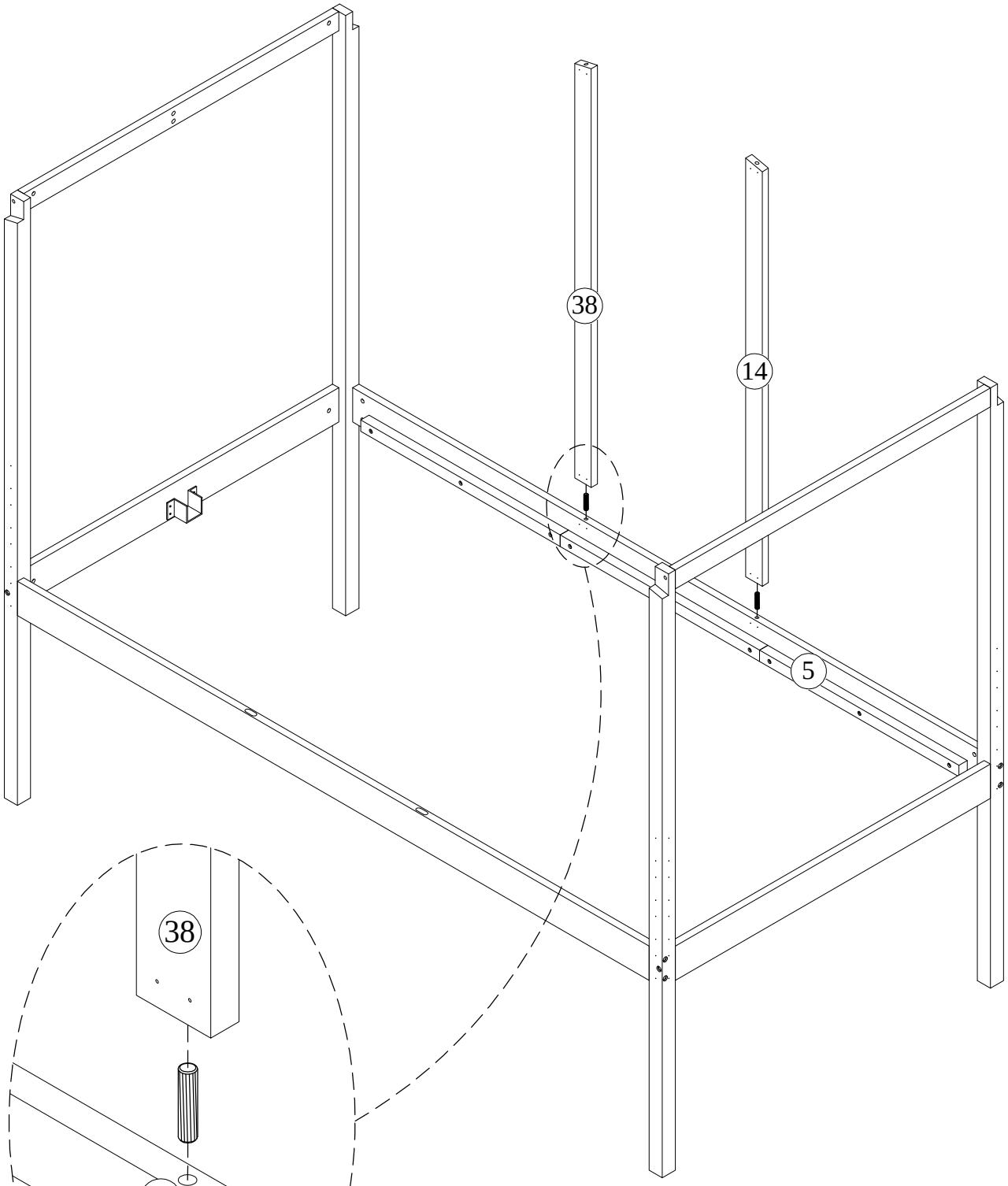


STEP-4

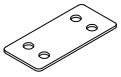
E

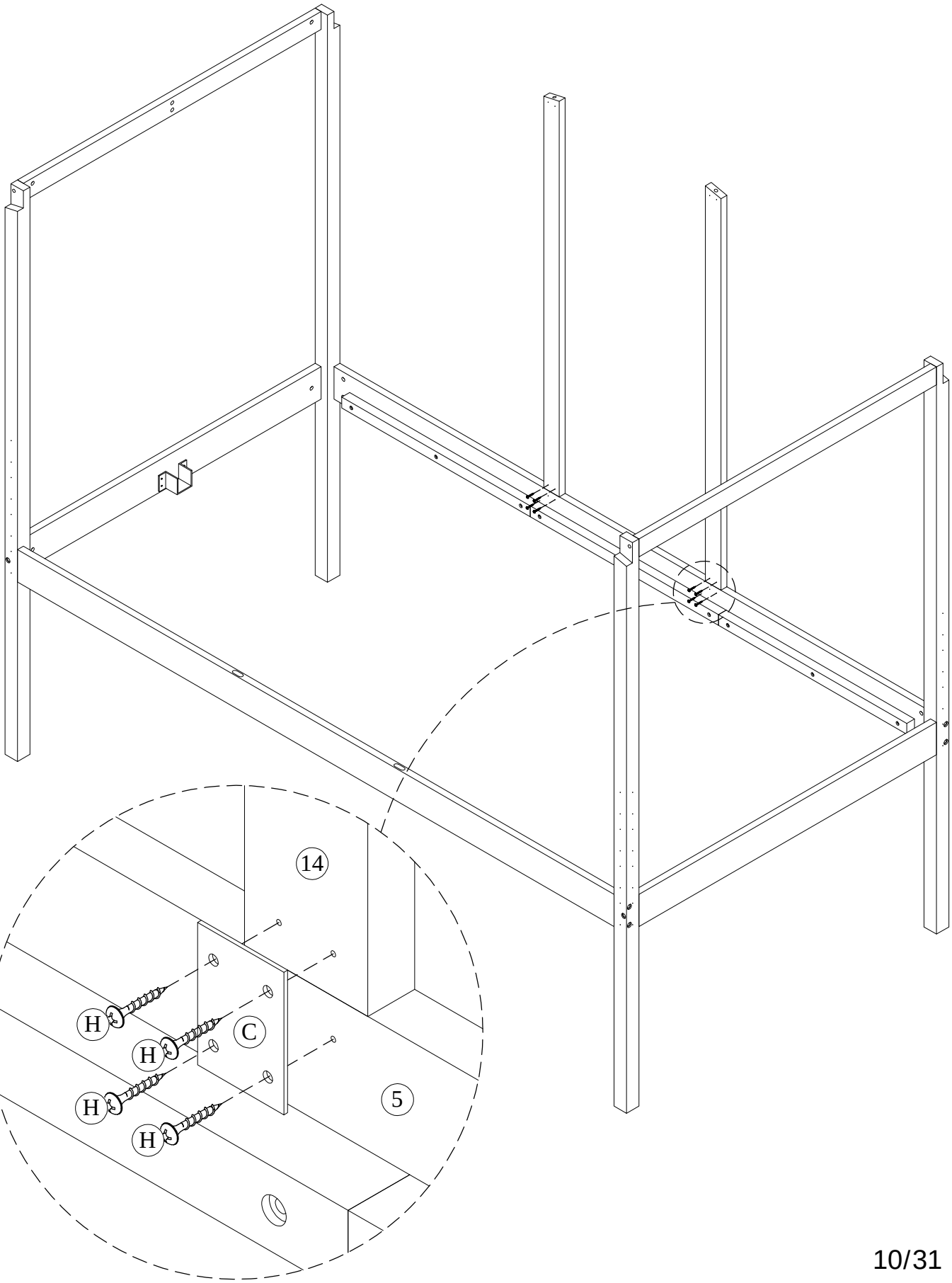


2pcs



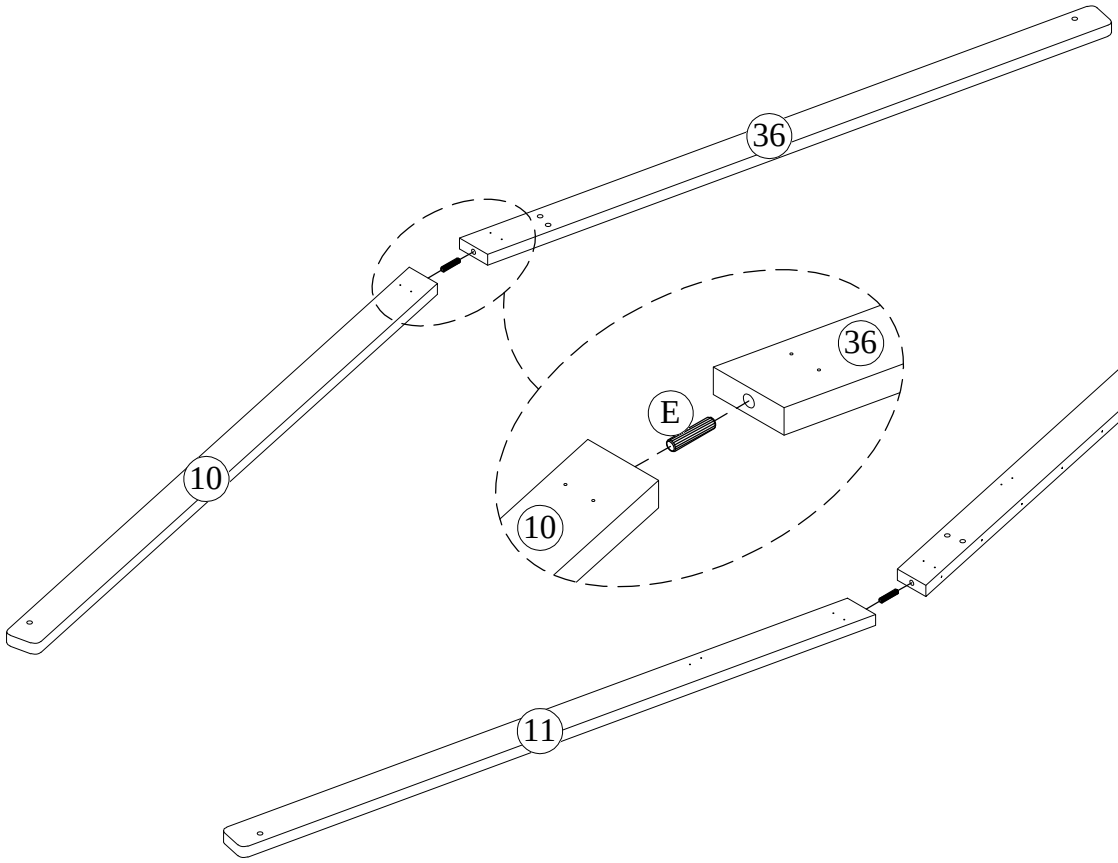
STEP-5

H	C
	
8pcs	2pcs



STEP-6

E



2pcs

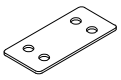
STEP-7

H 15



8pcs

D



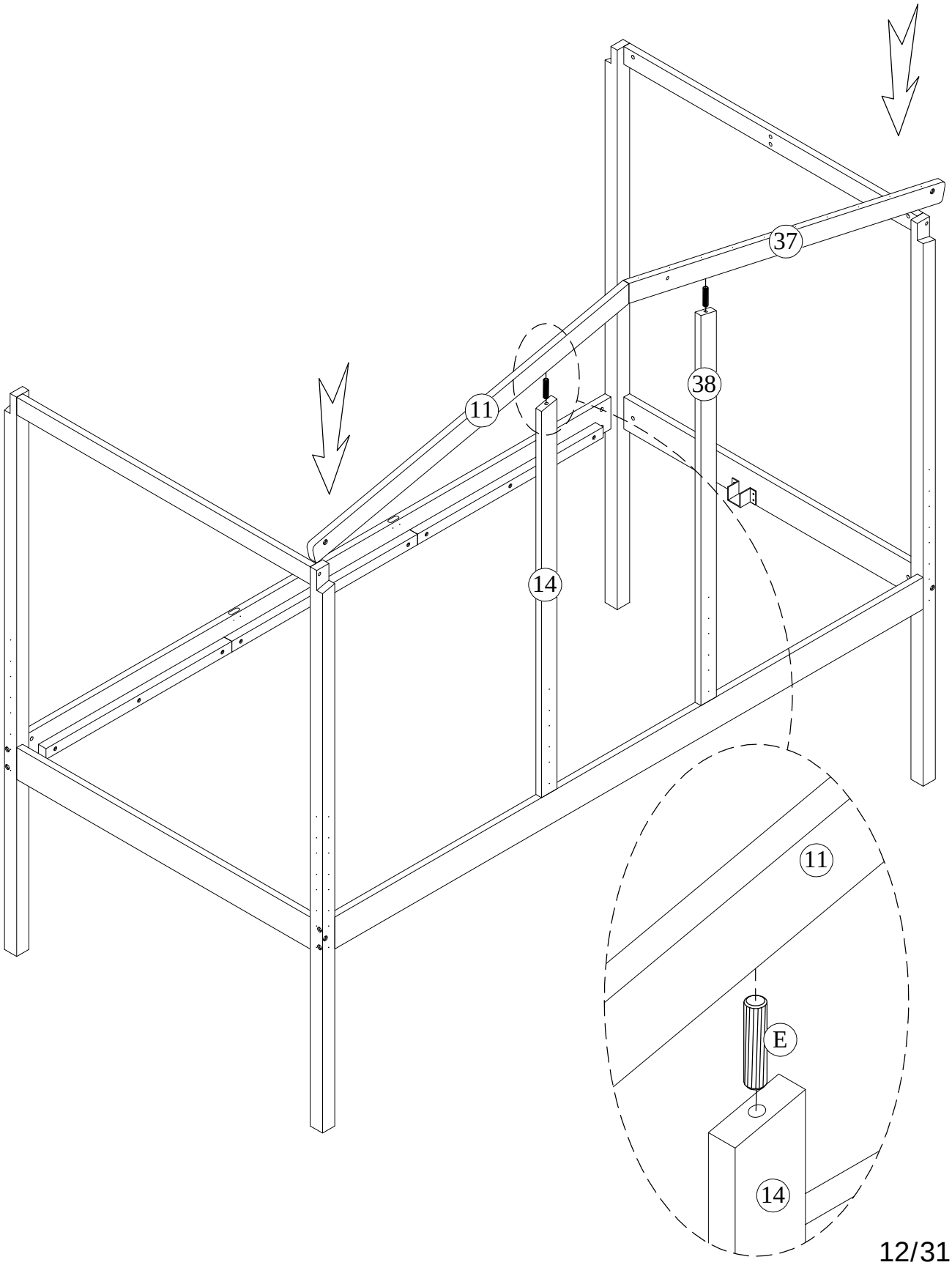
2pcs

STEP-8

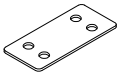
E

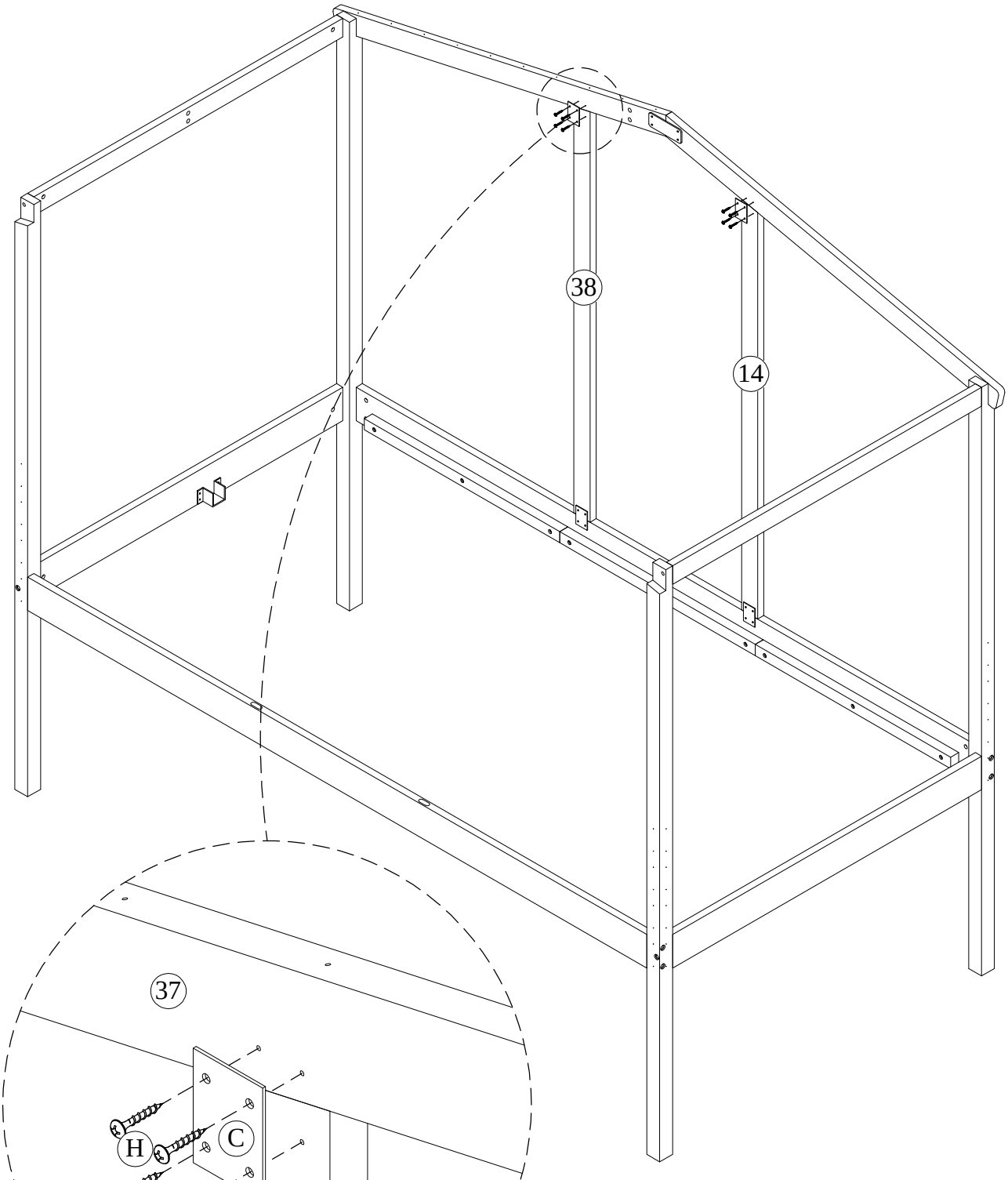


2pcs

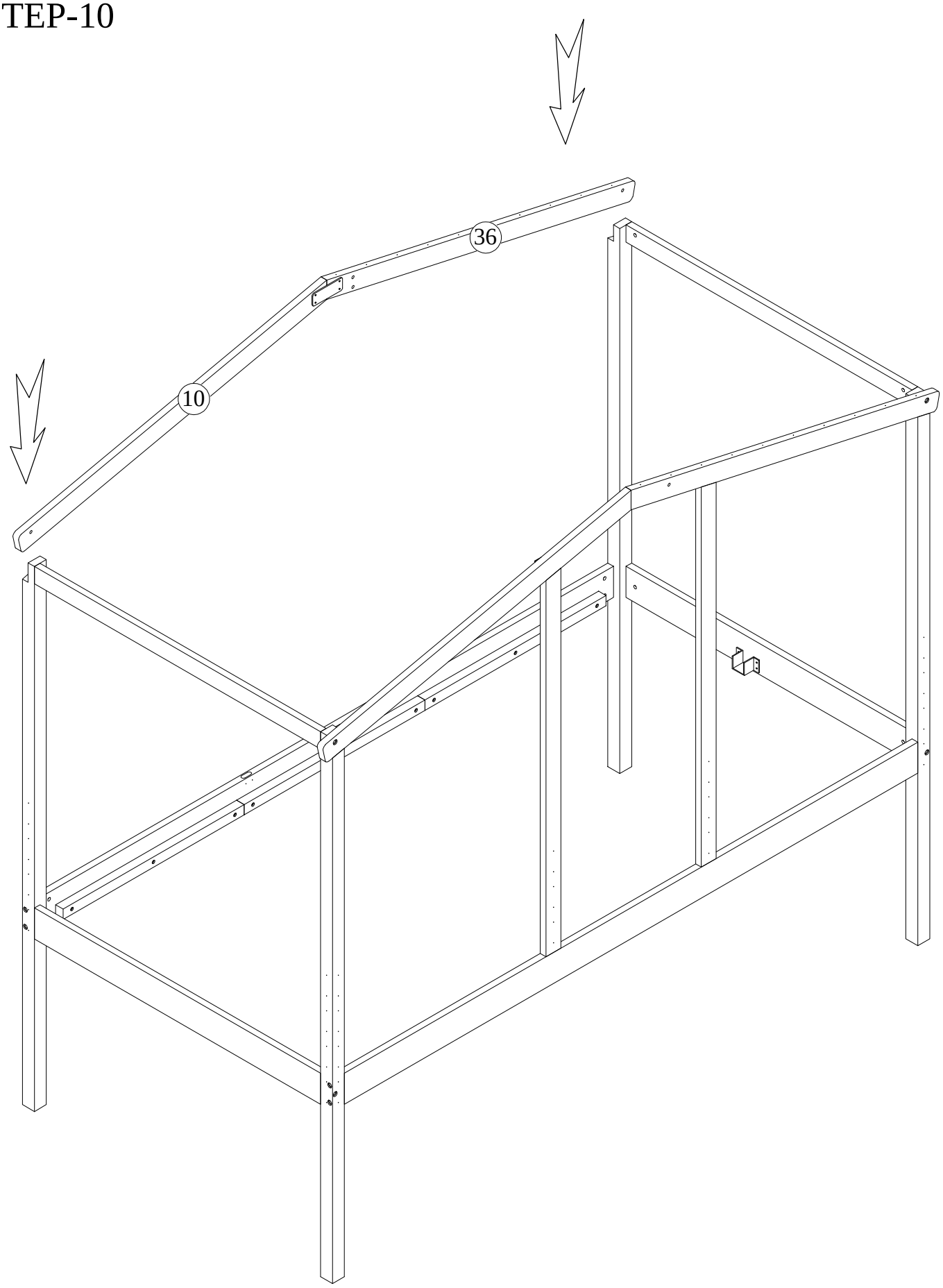


STEP-9

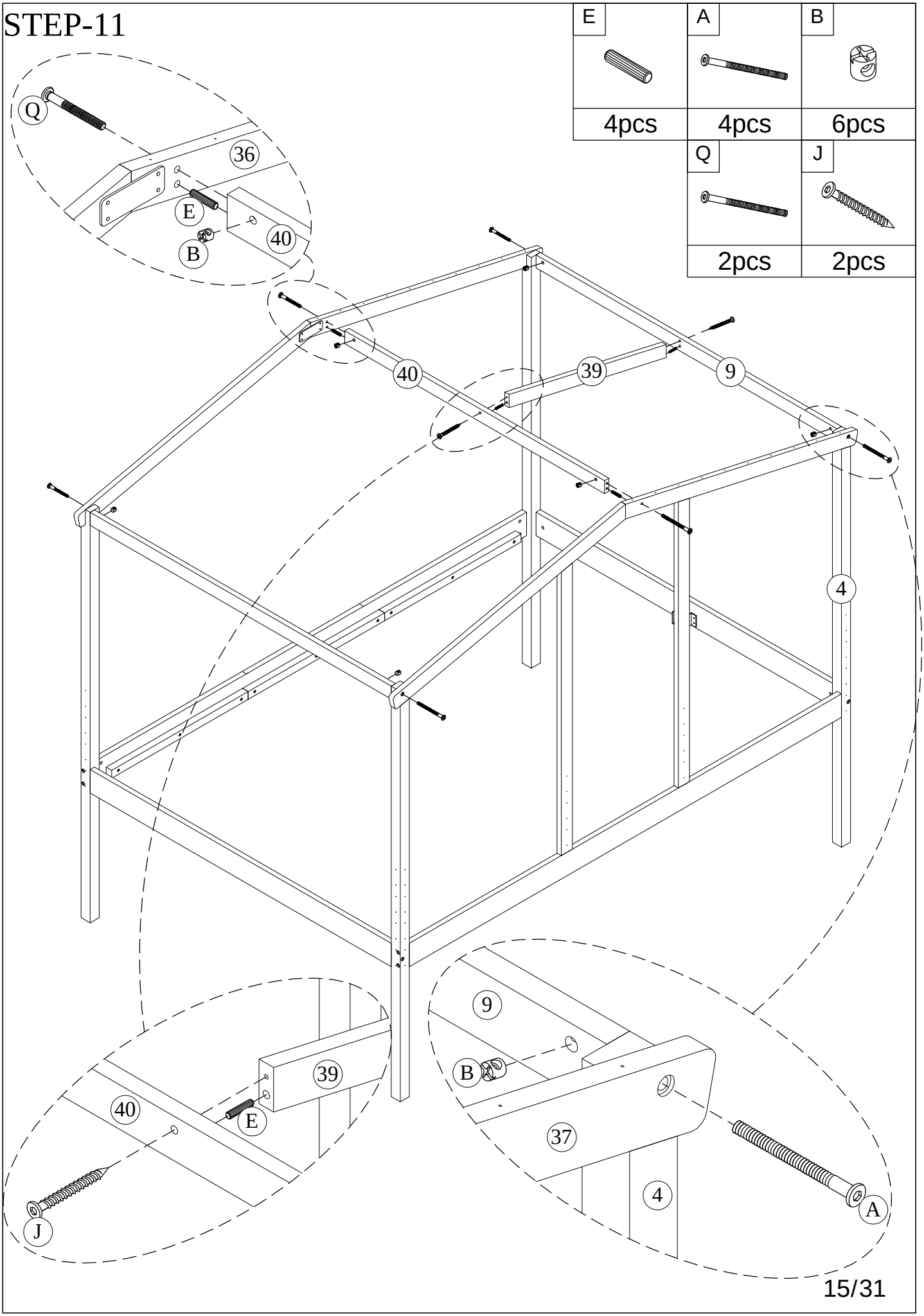
H	C
	
8pcs	2pcs



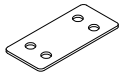
STEP-10

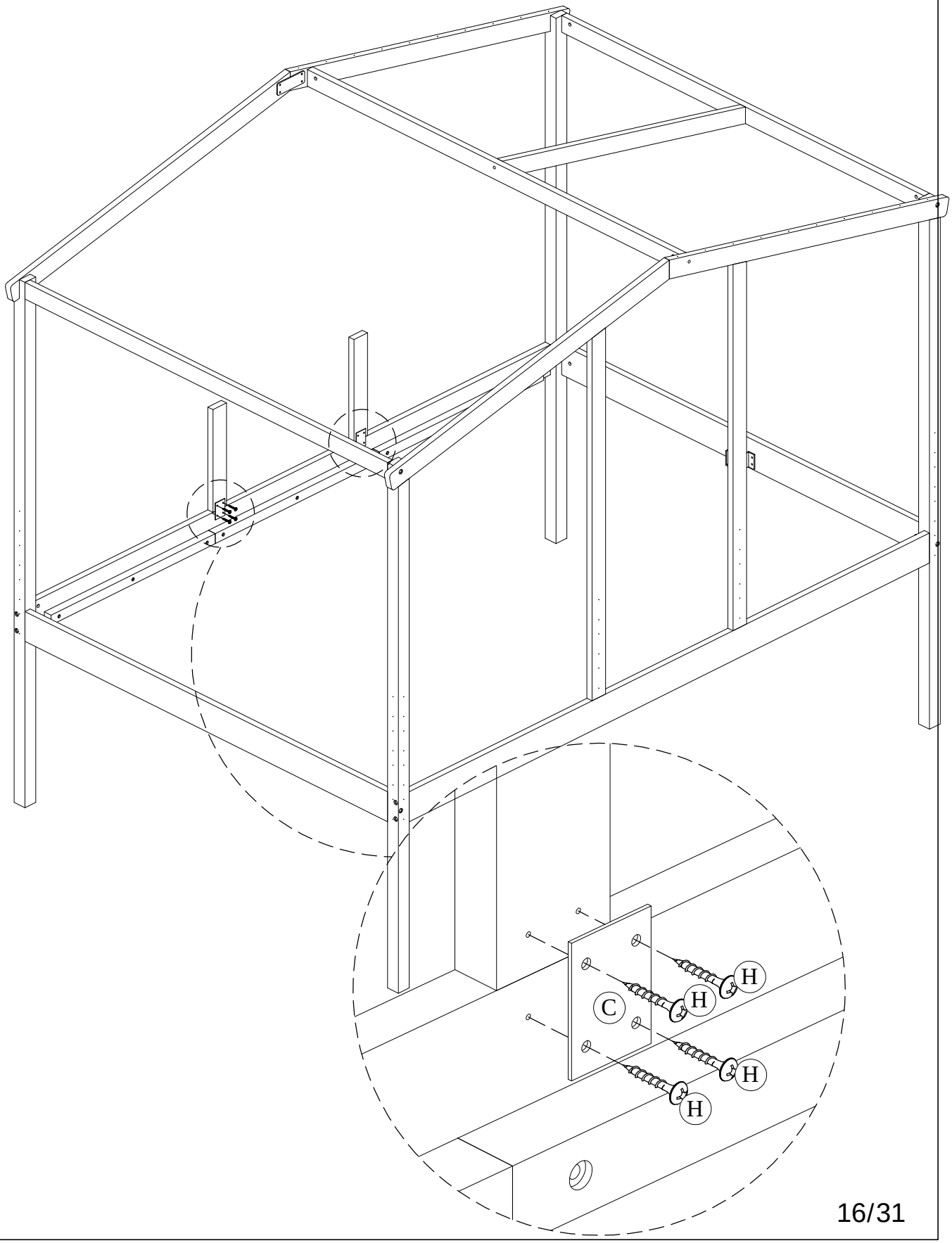


STEP-11

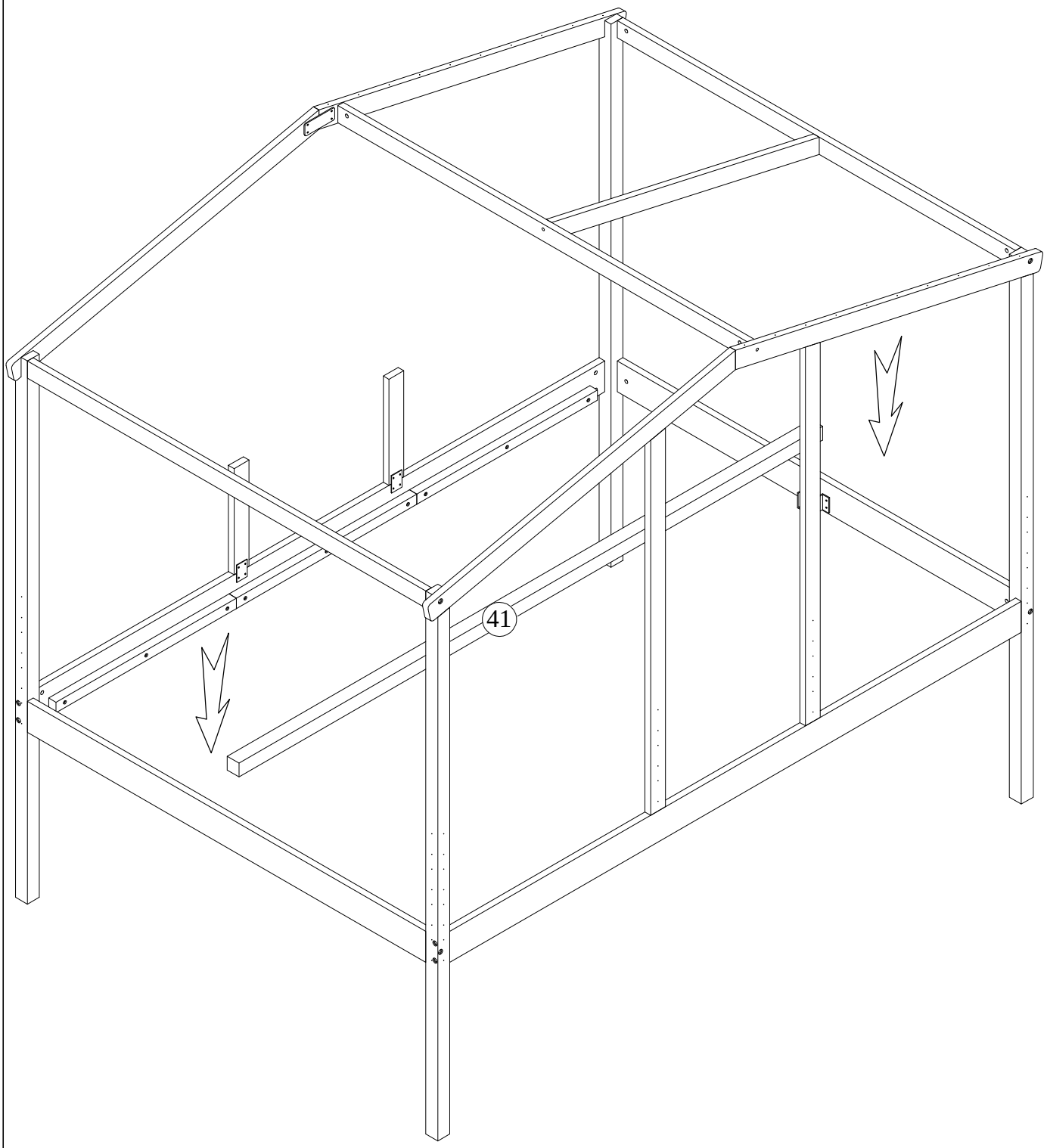

E
4pcs
A
4pcs
B
6pcs
Q
2pcs
J
2pcs
Q
36
E
B
40
40
39
9
4
39
40
E
J
9
B
37
4
A

STEP-12

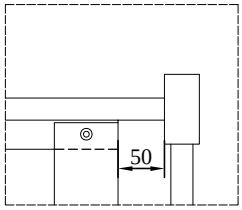
H	C
	
8pcs	2pcs



STEP-13



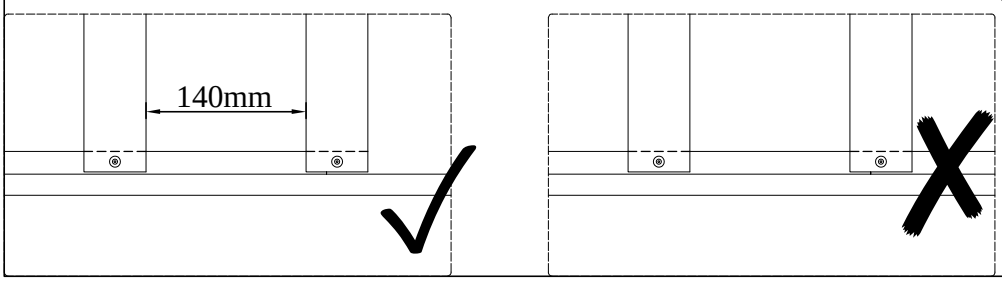
STEP-14



P



20pcs

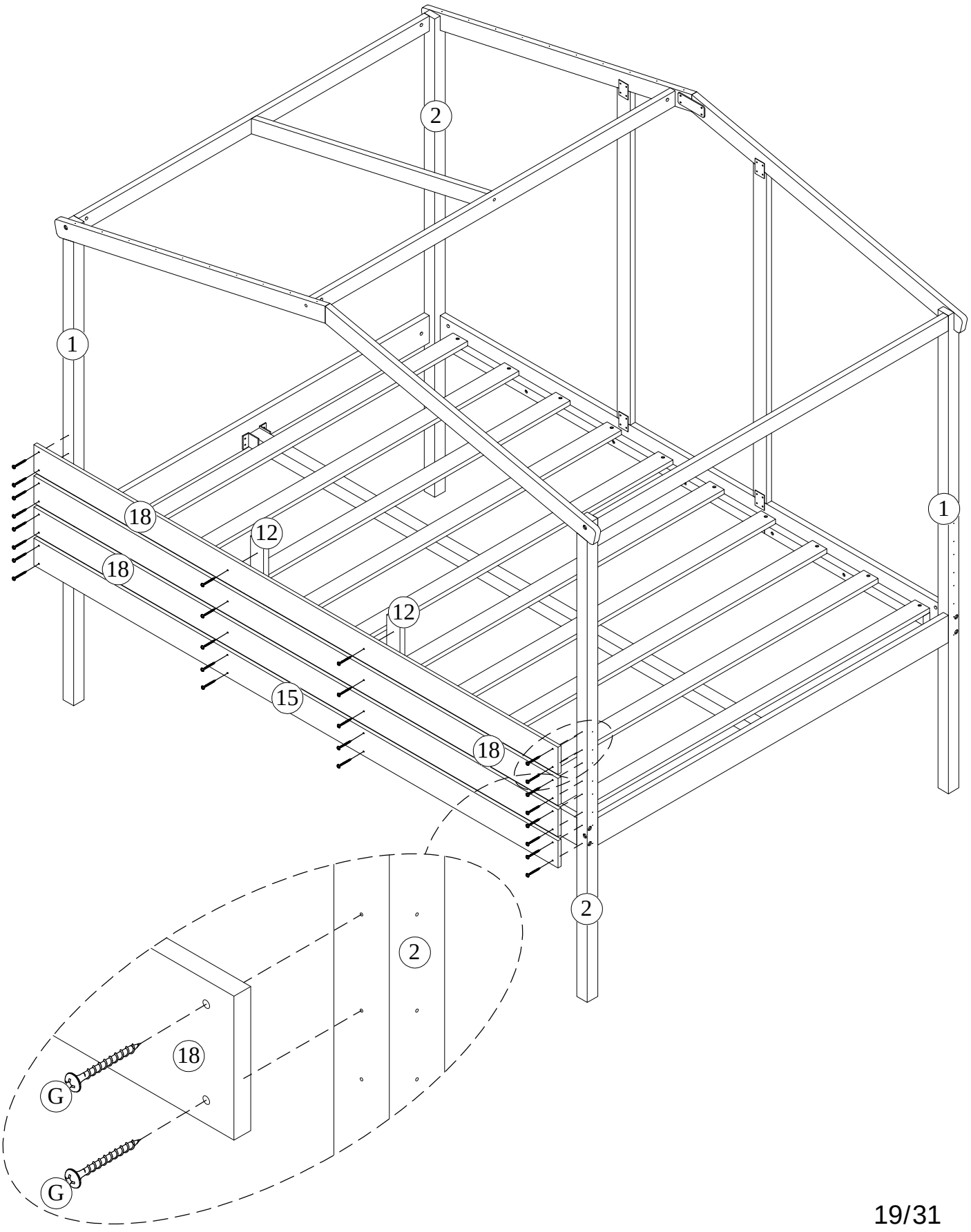


STEP-15

G



22pcs

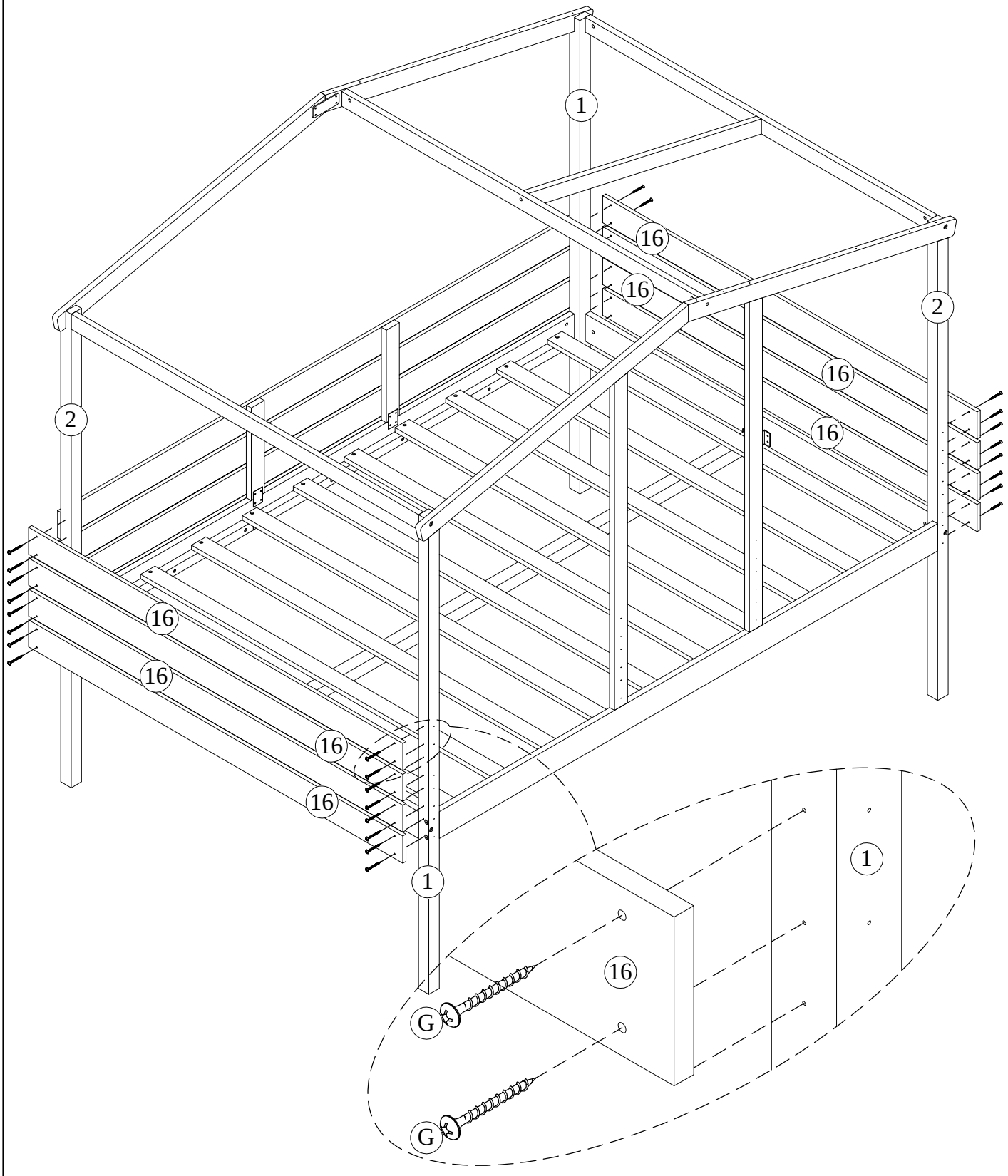


STEP-16

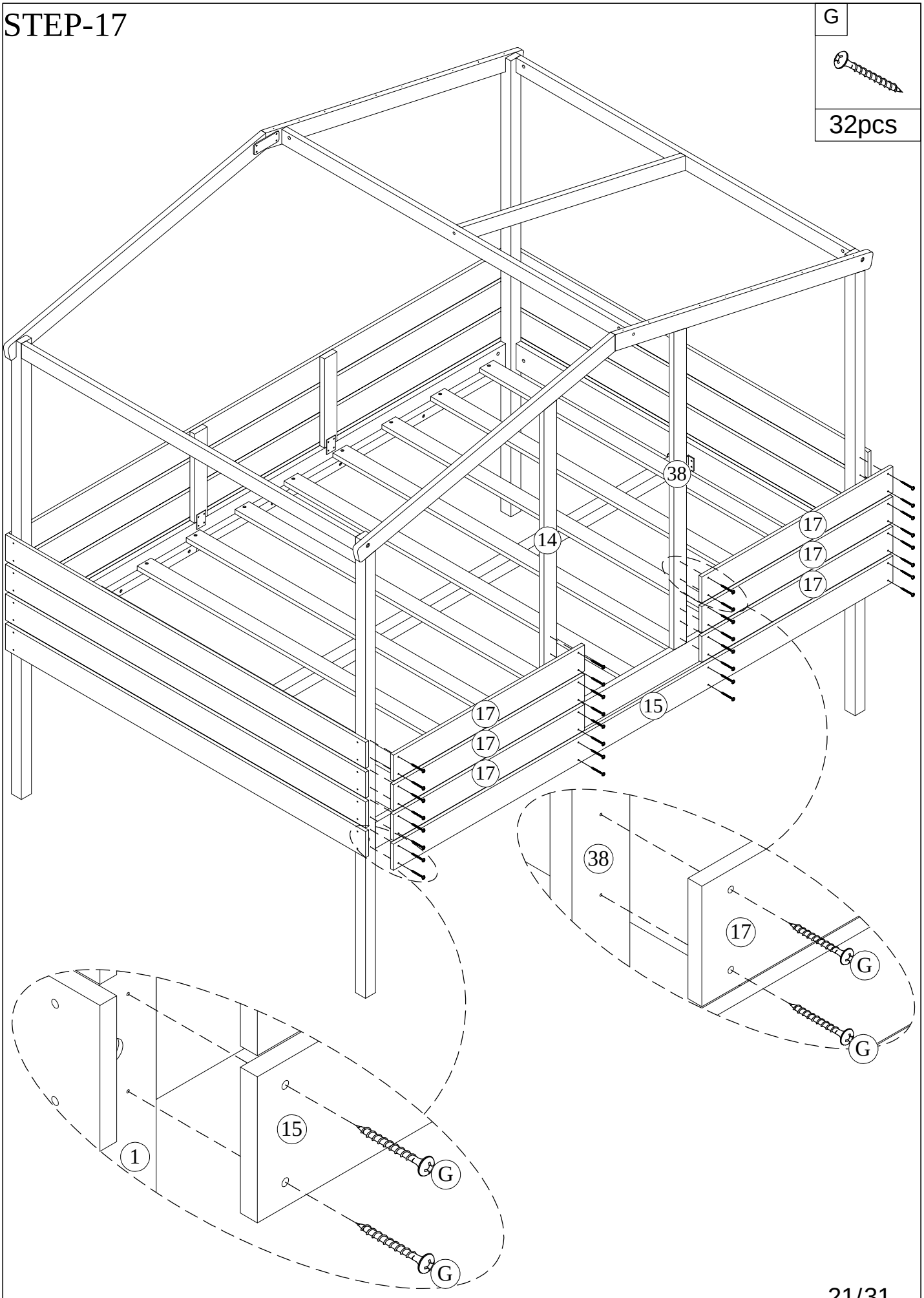
G



32pcs

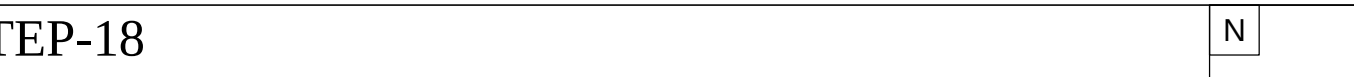


STEP-17

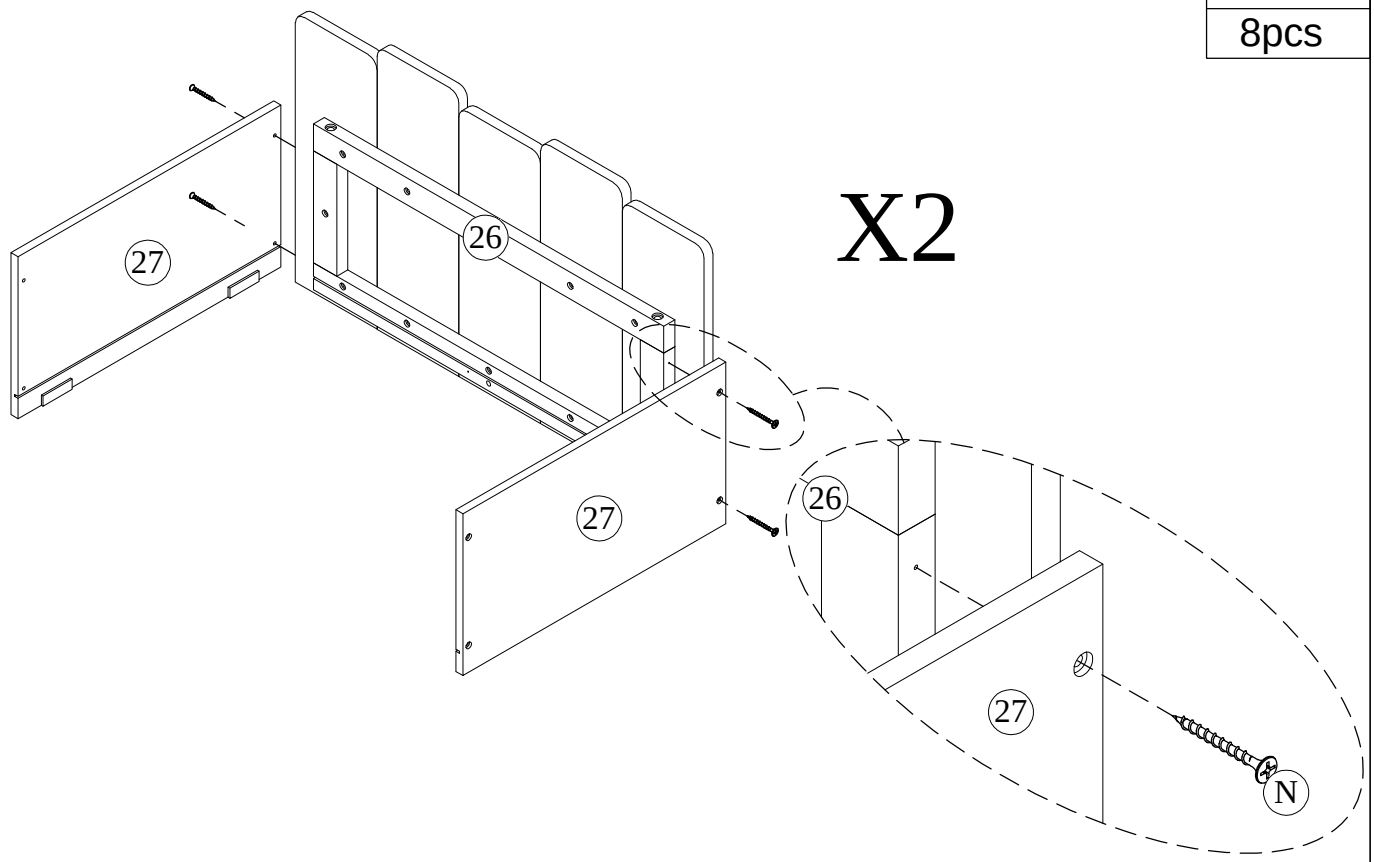


STEP-18

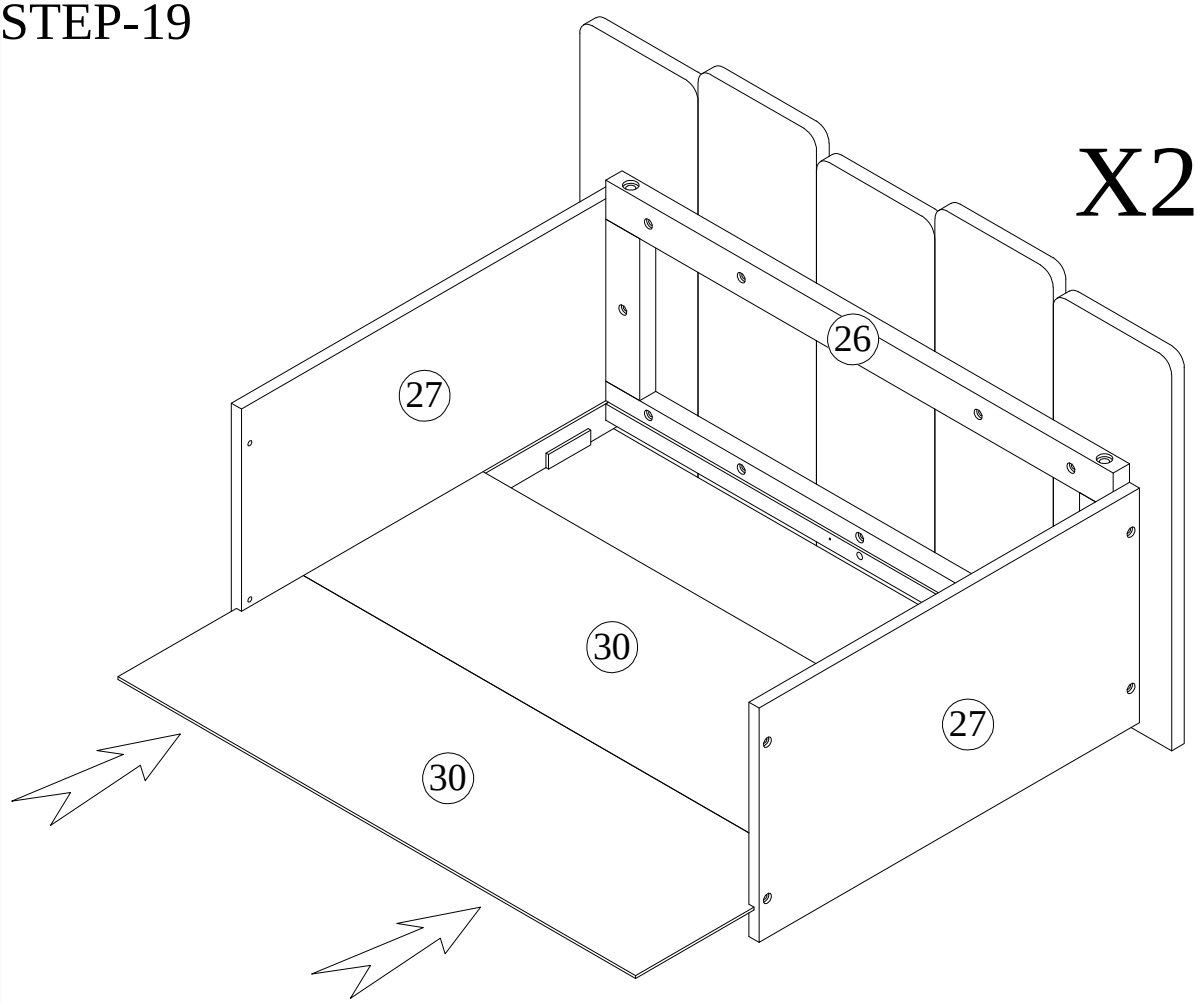
N



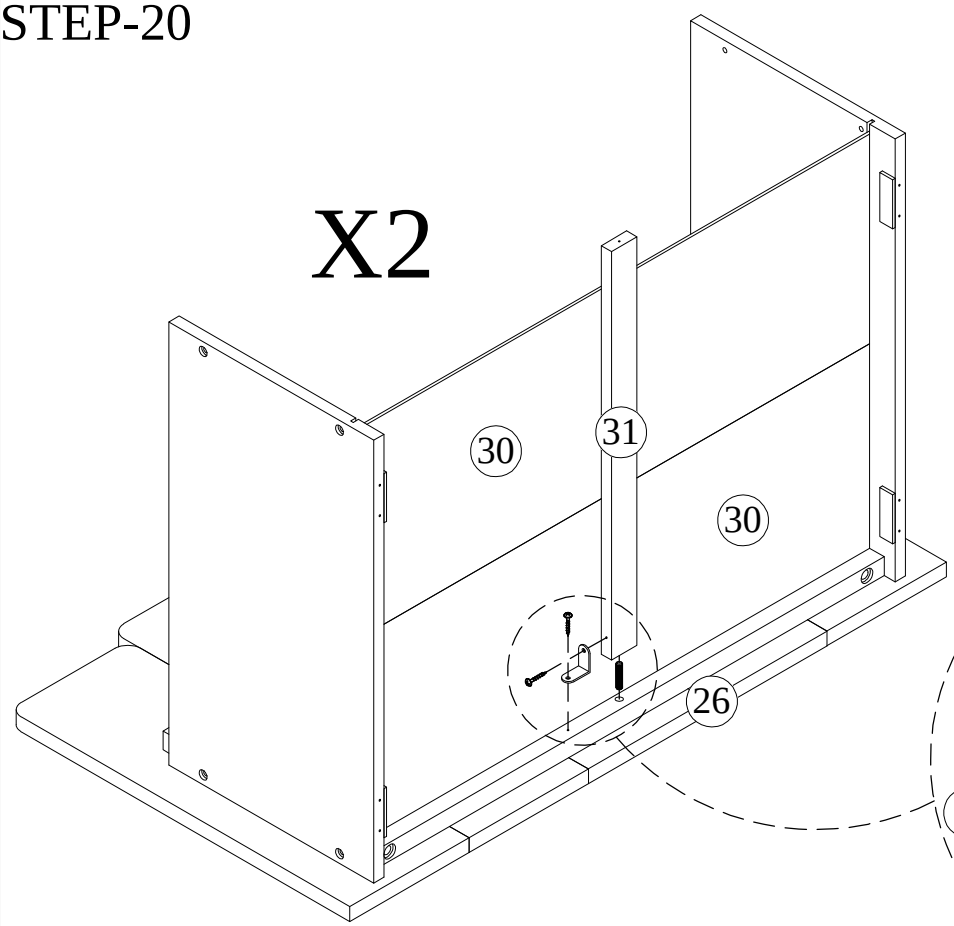
8pcs



STEP-19

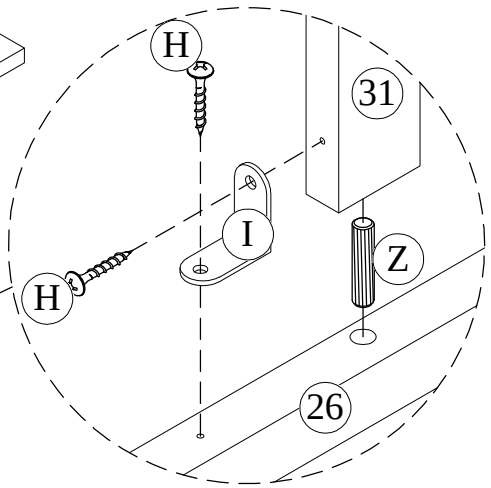


STEP-20

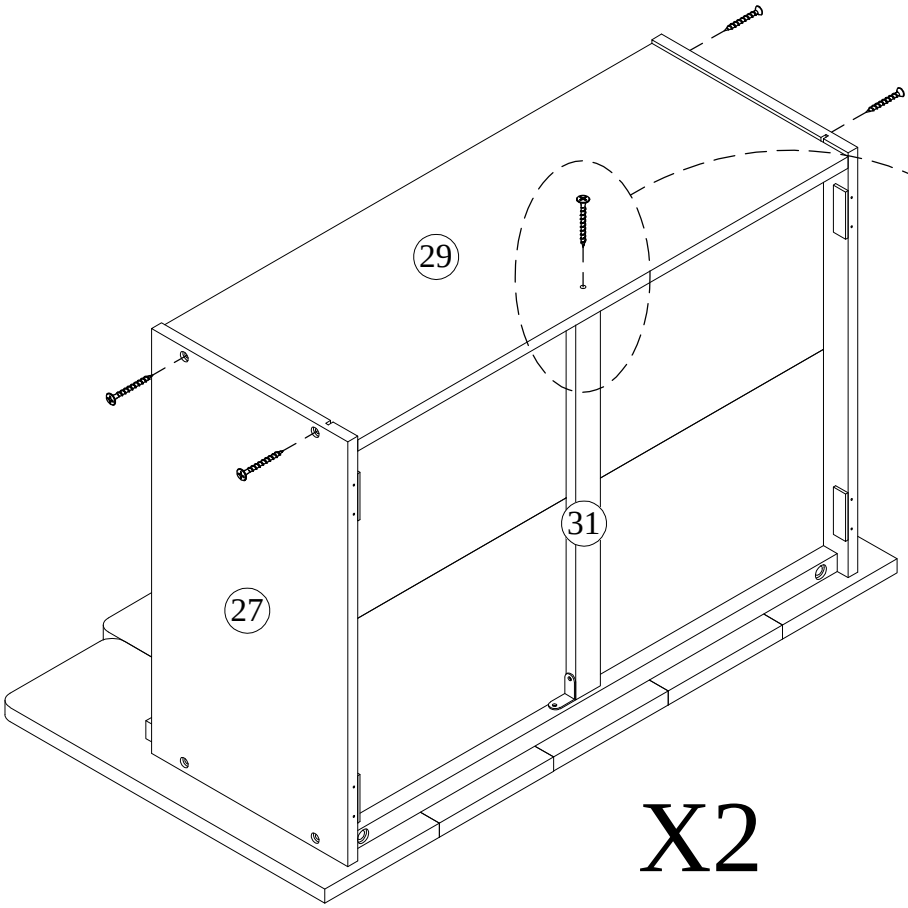


H	I
4pcs	2pcs

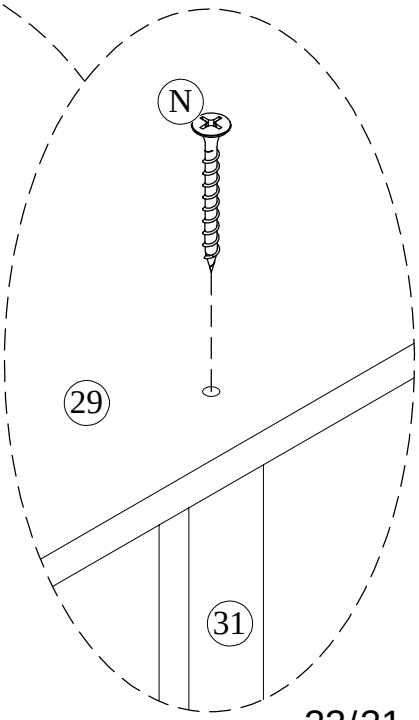
Z
2pcs



STEP-21



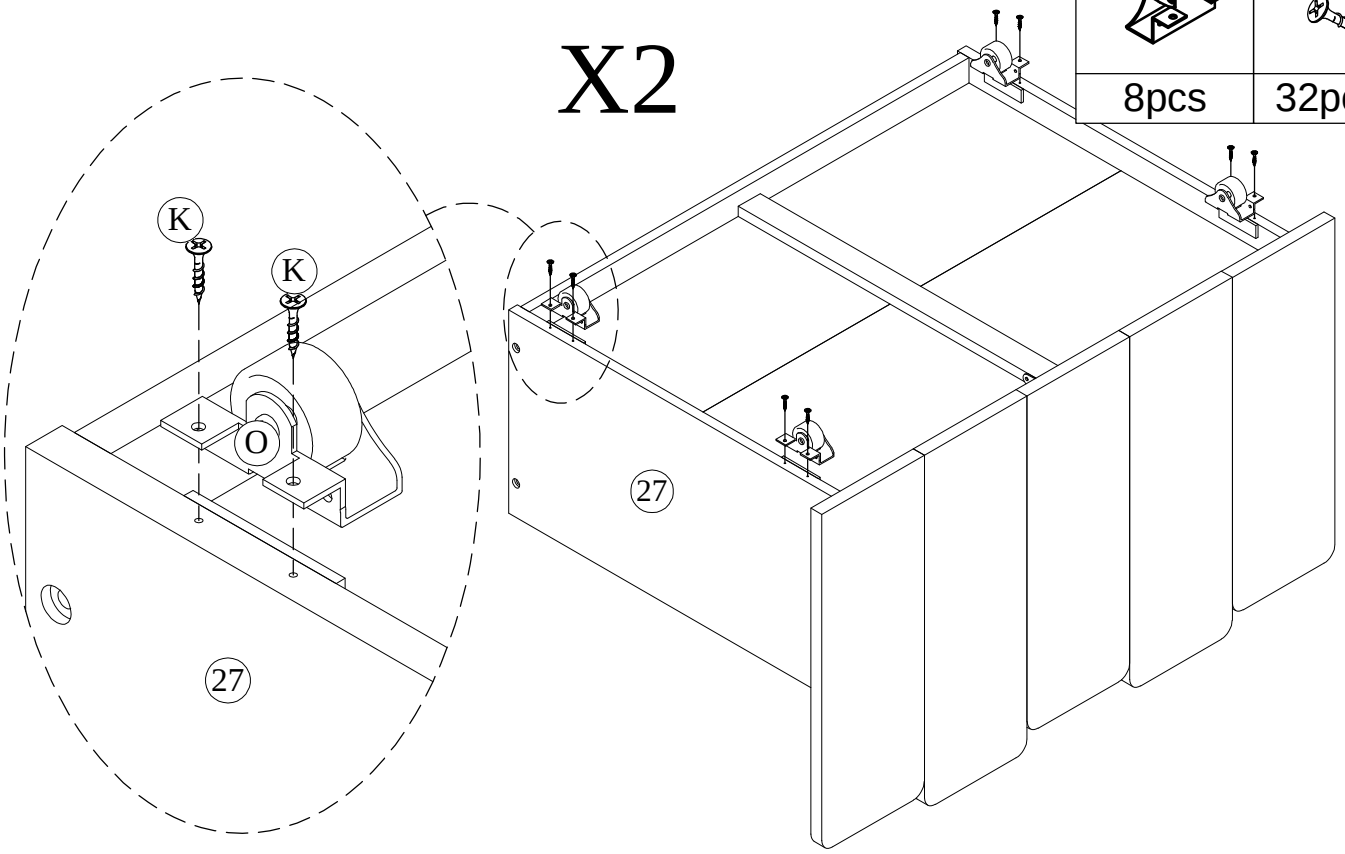
N
10pcs



STEP-22

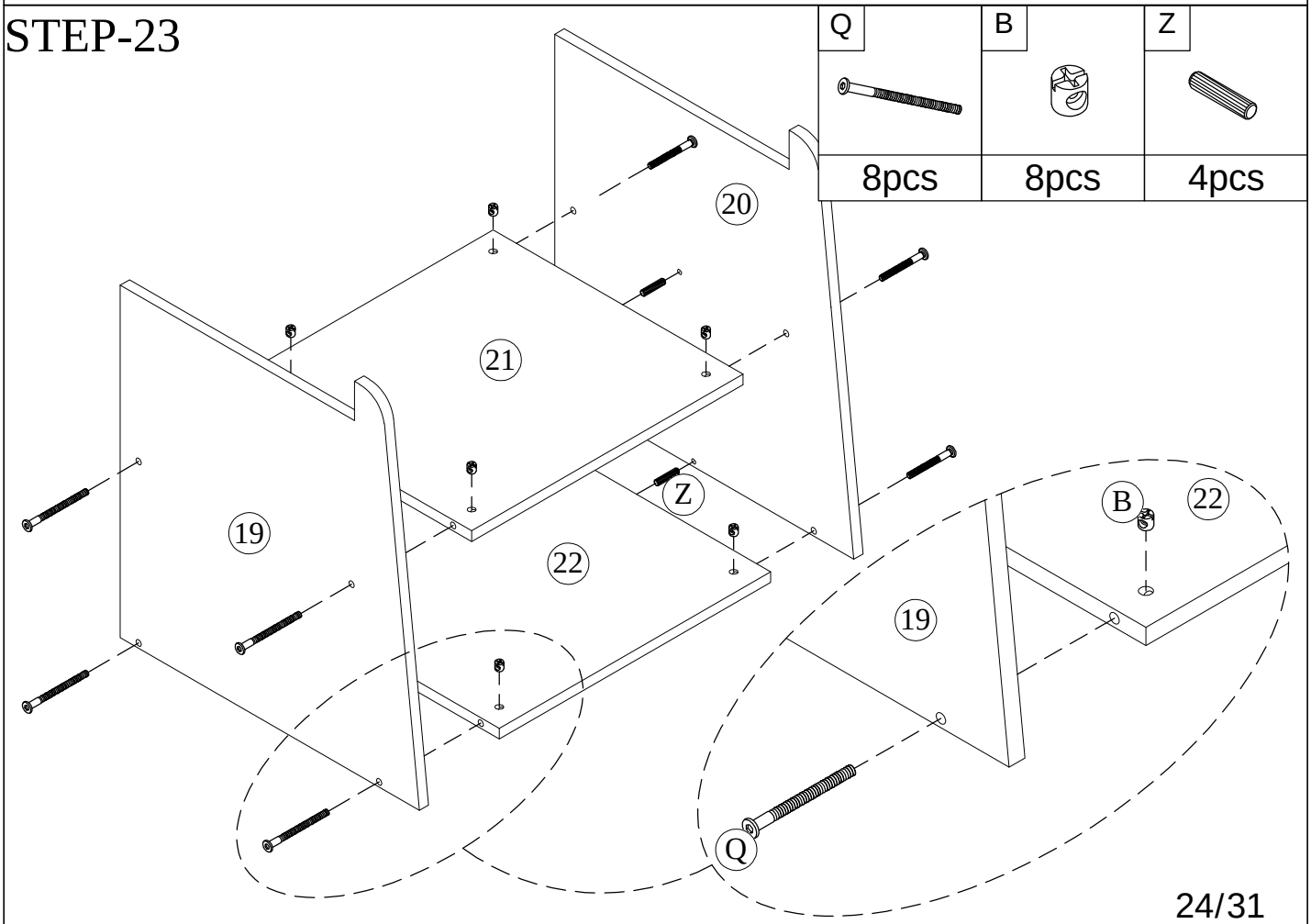
X2

O	K
8pcs	32pcs

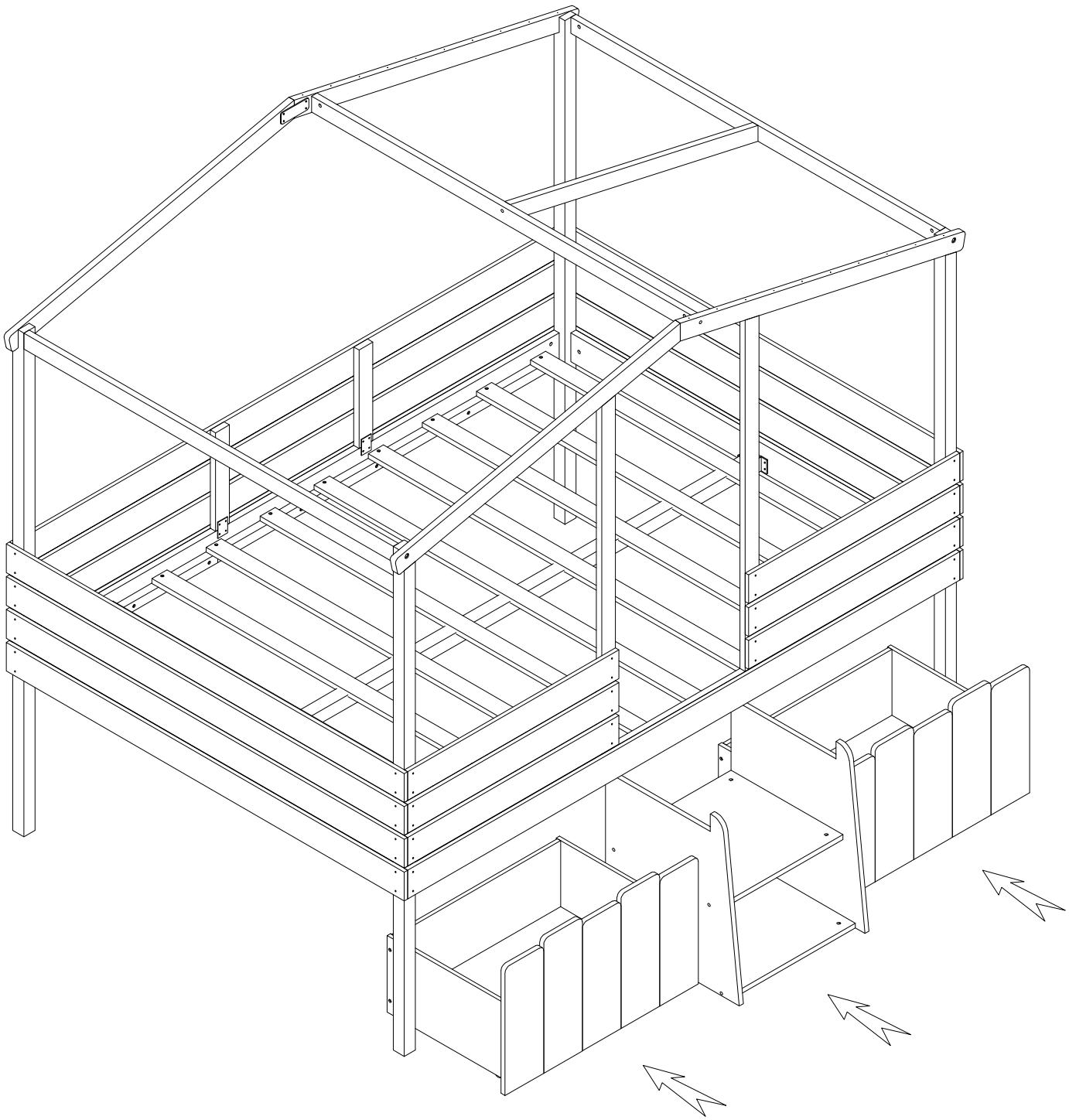


STEP-23

Q	B	Z
8pcs	8pcs	4pcs



STEP-24



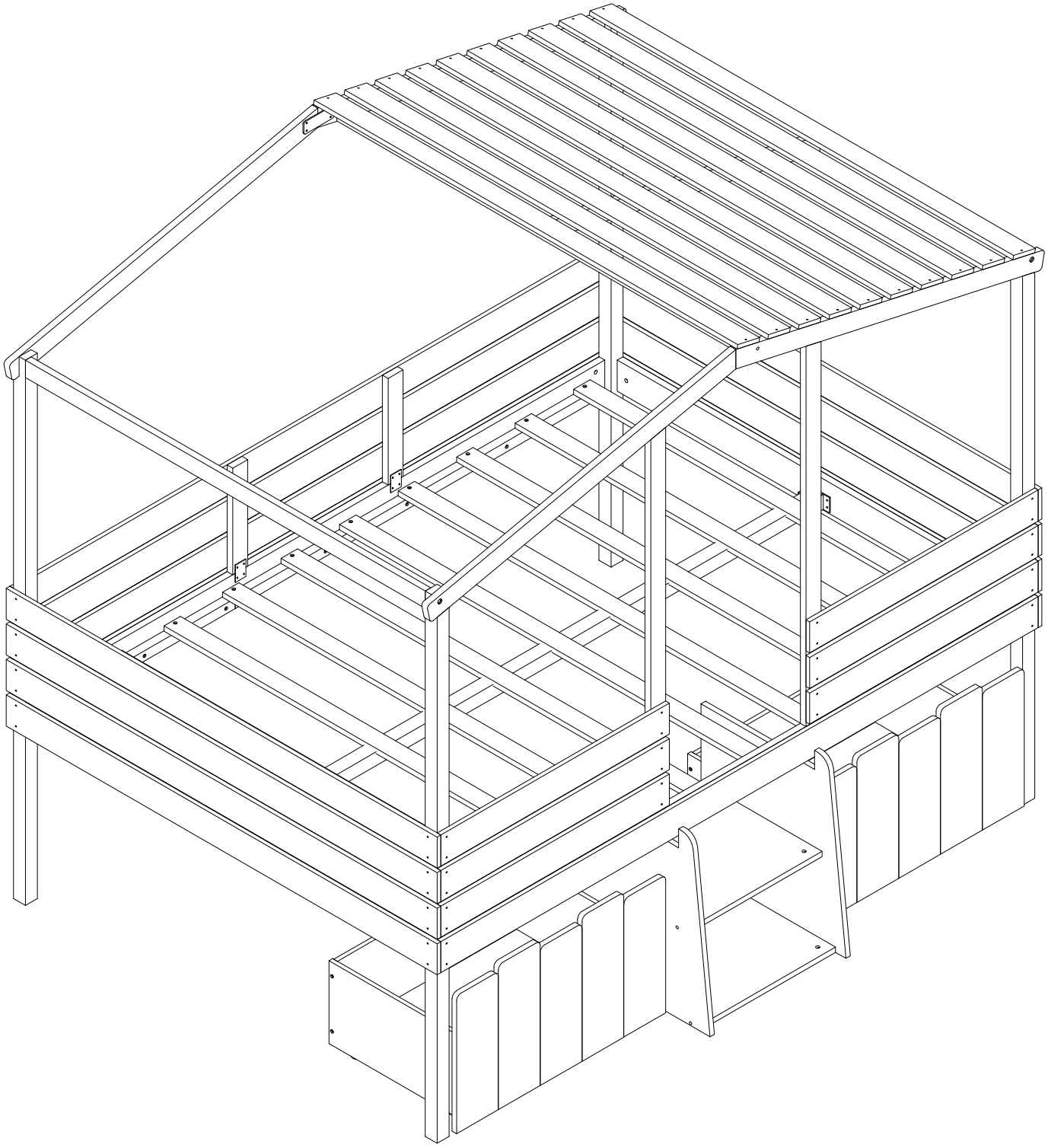
STEP-25

G

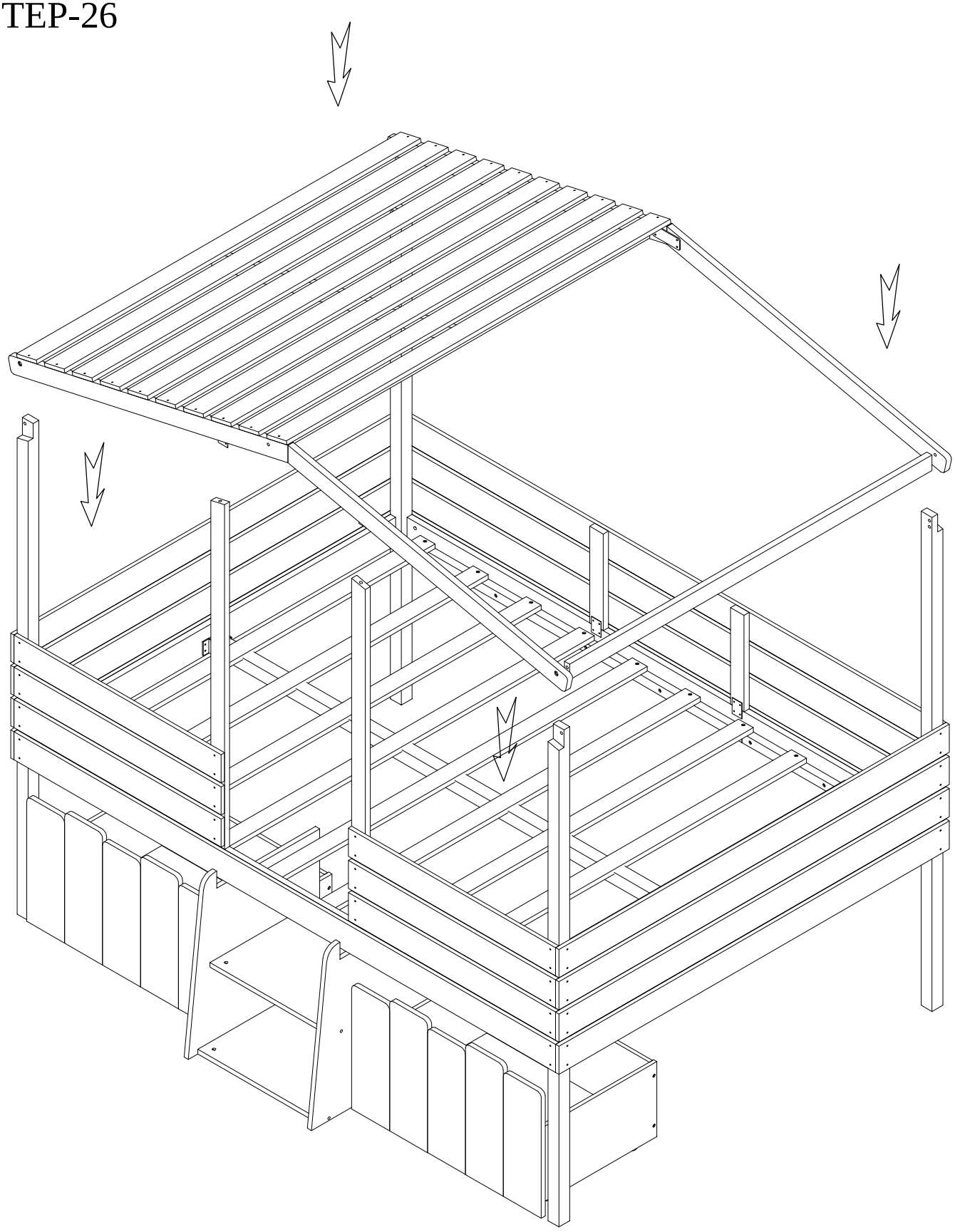


20pcs

OPTION 1

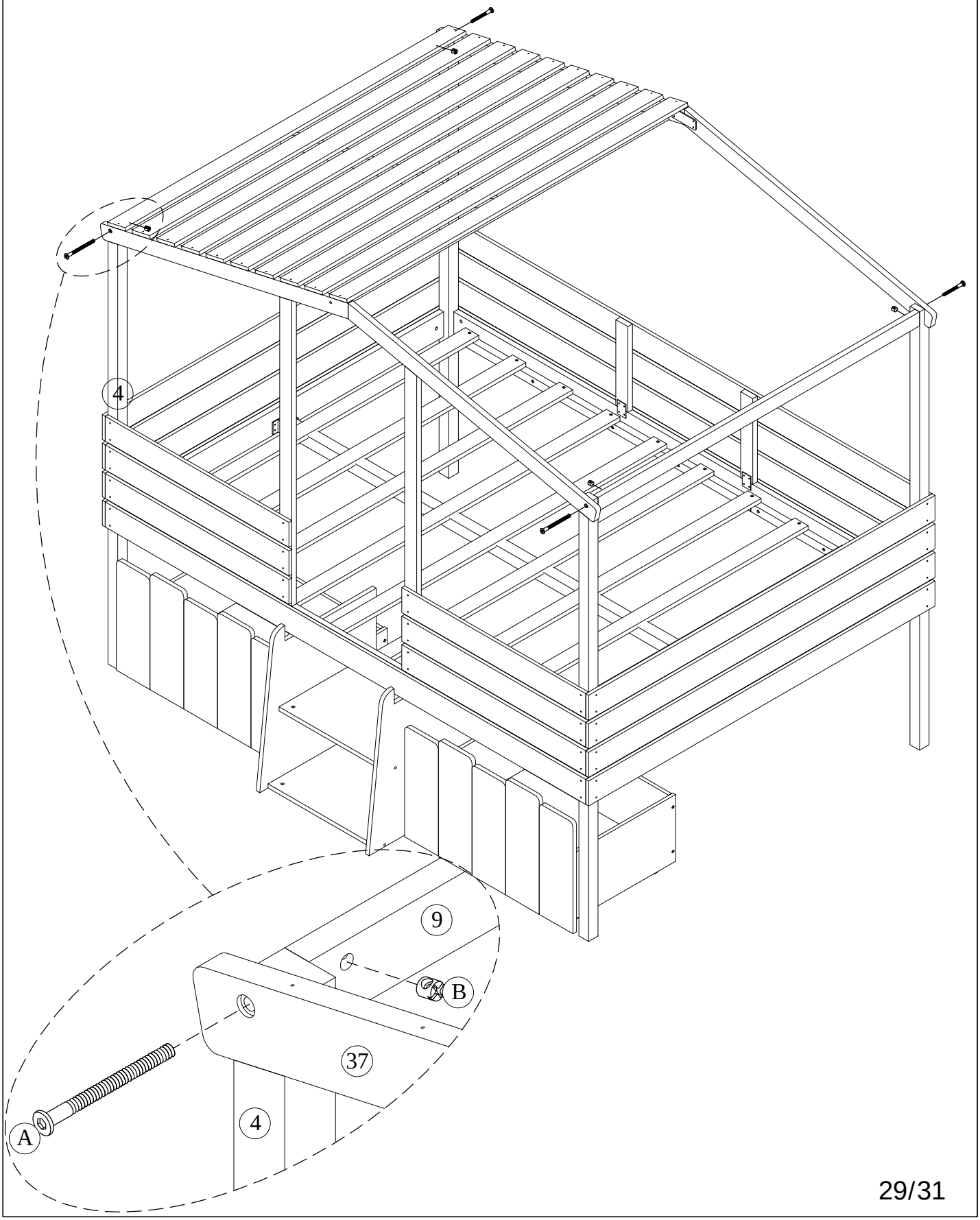


STEP-26

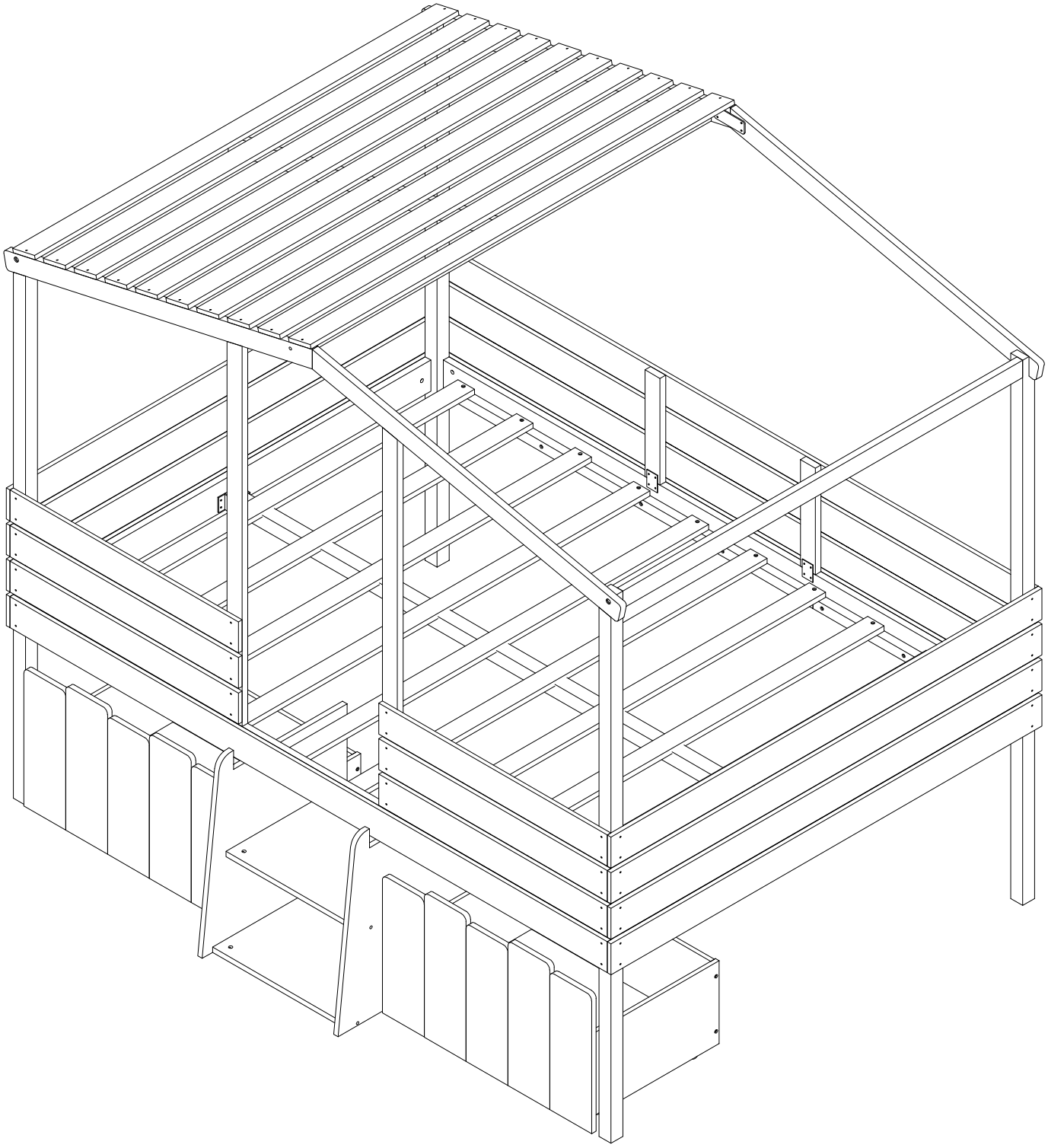


STEP-27

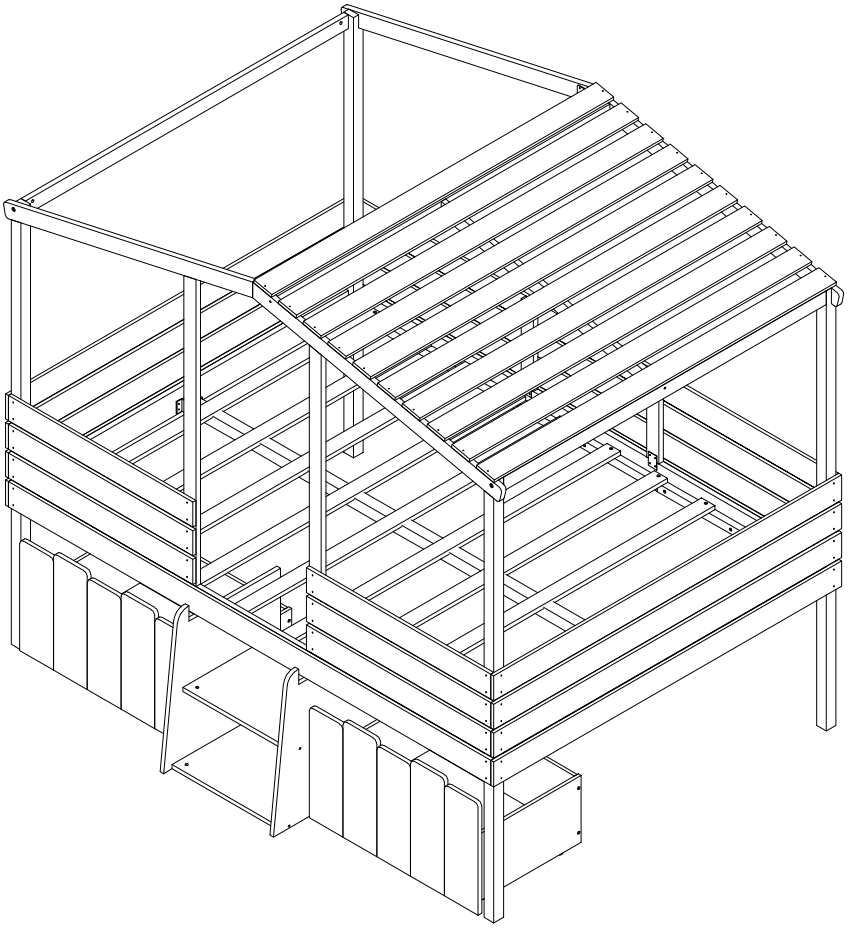
A	B
	
4pcs	6pcs



OPTION 2



FINISH OPTION 1



FINISH OPTION 2

