Assembly instructions

Queen over Queen

SAFETY WARNINGS AND GENERAL NOTES:

1. Follow the information on the warnings on the bunk bed end structure and on the carton. Do not remove the waming label from the bed.
2. Always use the recommended size mattress on mattress support,or both, to help prevent the likelihood of entrapment or falls.
3. Do not allow children under 6 years of age to use the upper bunk.
4. Periodically check and ensure the guardrail, ladder and other components are in their proper position, free from damage, and all connectors are tight.
5. Do not allow horseplay on or under beds.
6. Always prohibit jumping on the bed.
7. Prohibit more than one person on upper bunk.
8. Always use the ladder for entering and leaving the upper bunk.
9. Do not use substitute parts. Contact the manufacturer or dealer for replacement parts.
10. Use of a night-tight may provide added safety precaution for a child using the upper bunk.
11. Always use guardrails on both long sides of the upper bunk.
12. If the bunk bed will be placed next to a wall, the guardrail that runs the full length of the bed should be placed against the wall to prevent entrapment between the bed and the wall.
The use of water or sleep flotation mattresses is prohibited.
13. **STRANGULATION HAZARD**-Never attach or hang items to any part of the bunk bed that are not designed for use with the bed ; for example, but not limited to, hooks, belts and jump ropes.
14. Keep these instructions for future reference.
15. We recommend assembling your bunk bed on the shipping carton to protect your floor or carpet.
16. Be certain all staples are out of the box before beginning assembly on the shipping carton.
17. USE ONLY MATTRESSES WHICH ARE AS THE TABLE BELOW ON UPPER AND ON LOWER BUNKS.

Upper bed

Bed type	Length	Width	Thickness
Queen Standard	79" - 80"	59 ½"	6" max

Bottom bed

Bed type	Length	Width	Thickness
Queen Standard	79" - 80"	59 ½"	8"

18. SURFACE OF MATTRESS MUST BE AT LEAST 5"(127MM) BELOW THE UPPER EDGE OF GUARDRAILS.
19. Replacement Parts:
Replacement Parts, including additional guardrails, may be obtained from any of our dealers.

Component distribution preview

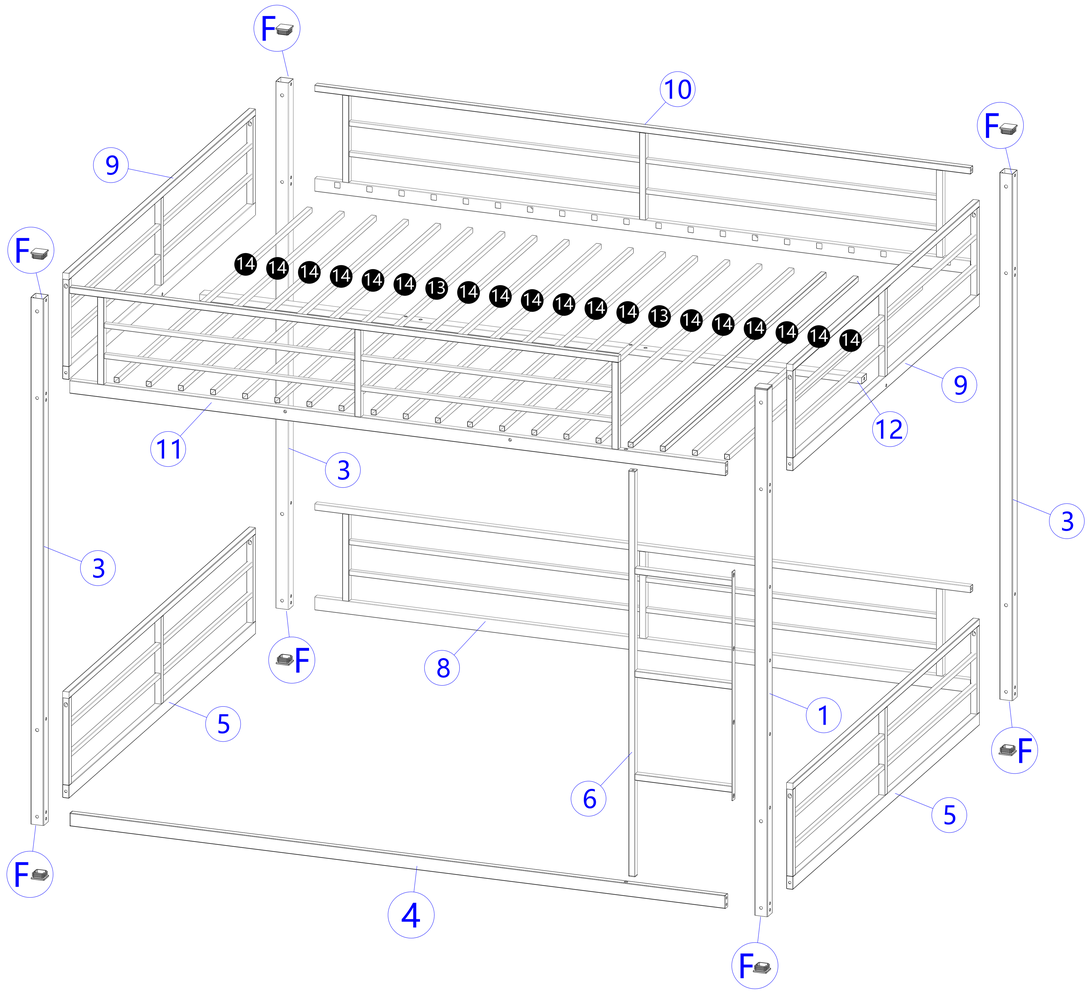

PARTLIT

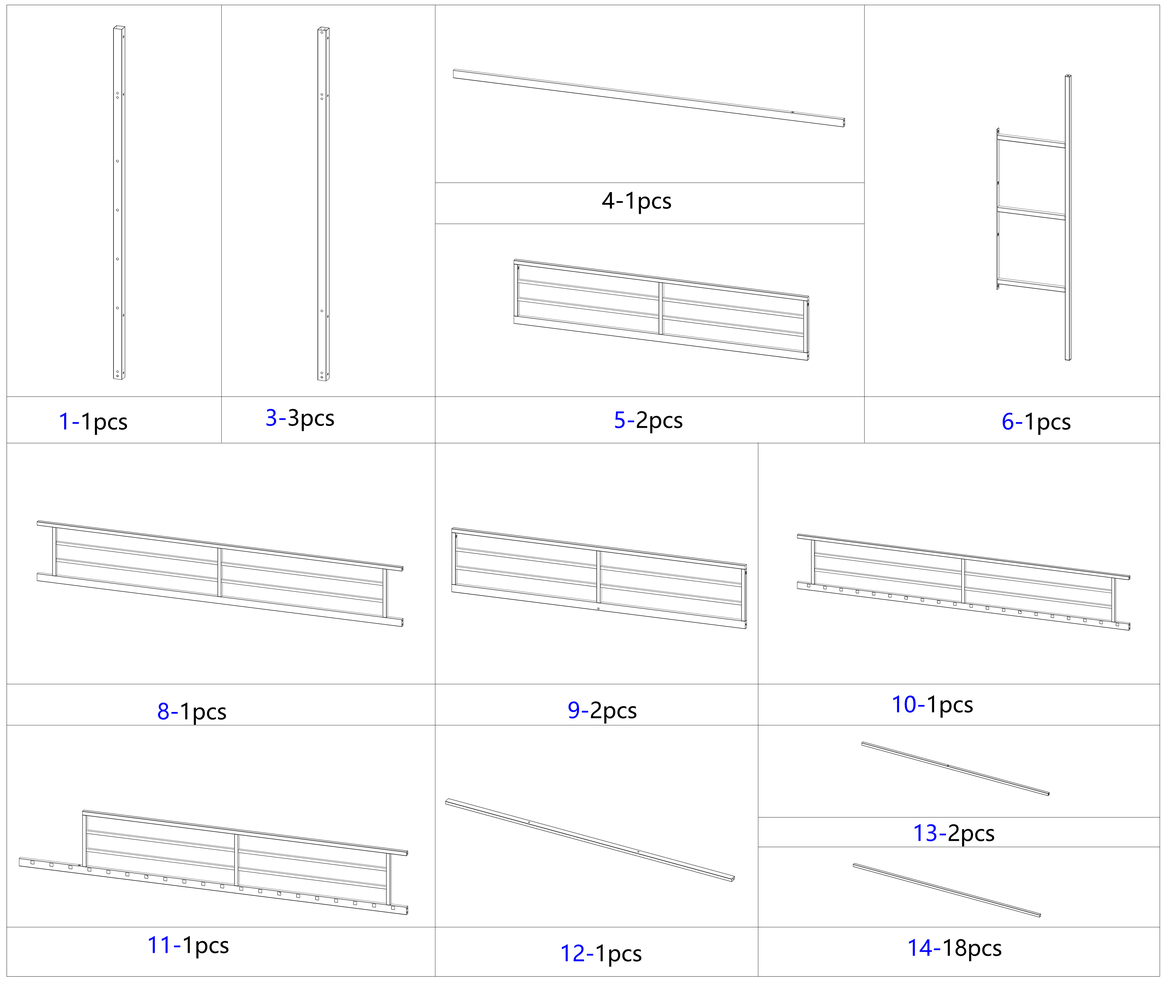

HARDWARE LIST

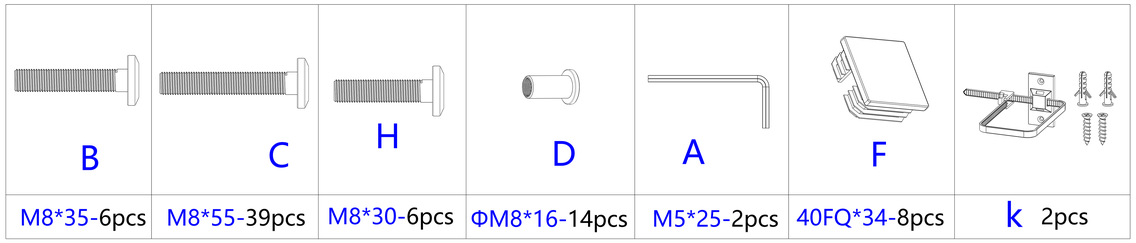

Step 1: Use hardware A,C,F and connect #3, #8 and #10 together.

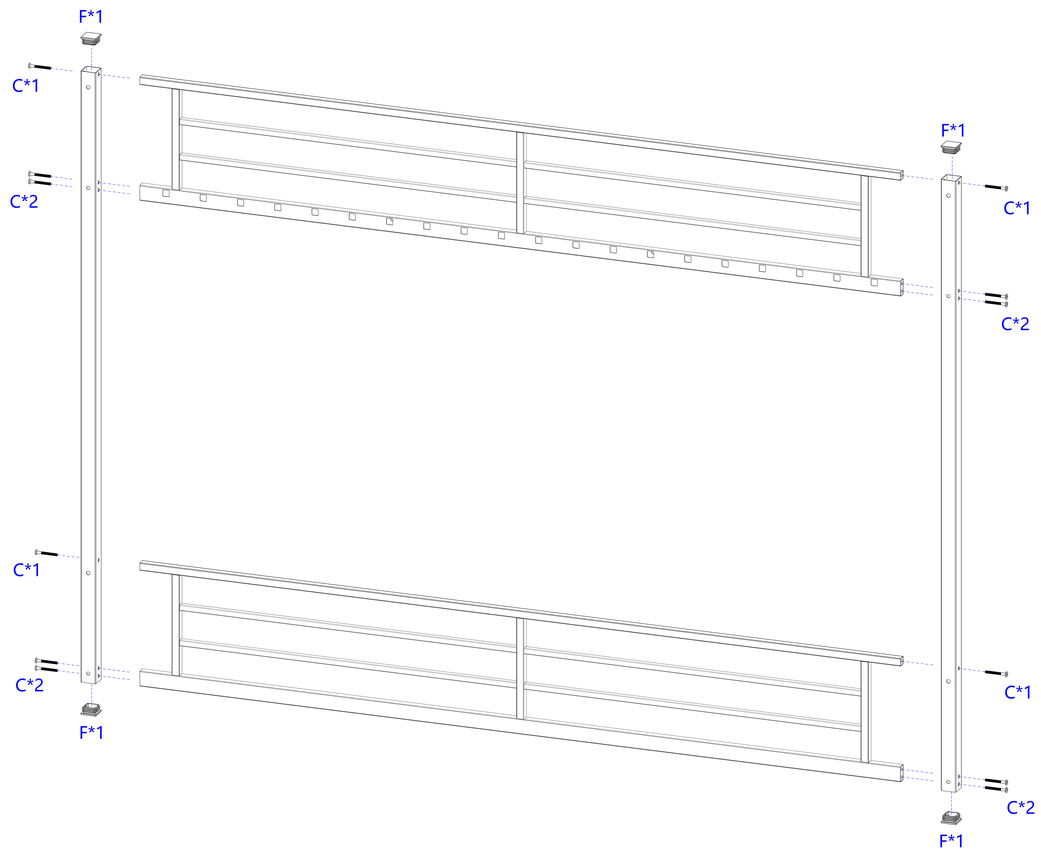

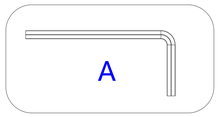

	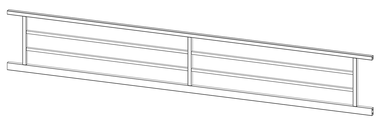	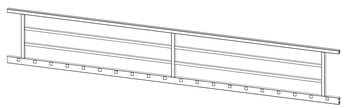	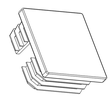 F 40FQ*34-4pcs C
3-2pcs	8-1pcs	10-1pcs	M8*55-12pcs

Step 2: Use hardware A,C,F and connect #3, #1 , #8and #11 together.

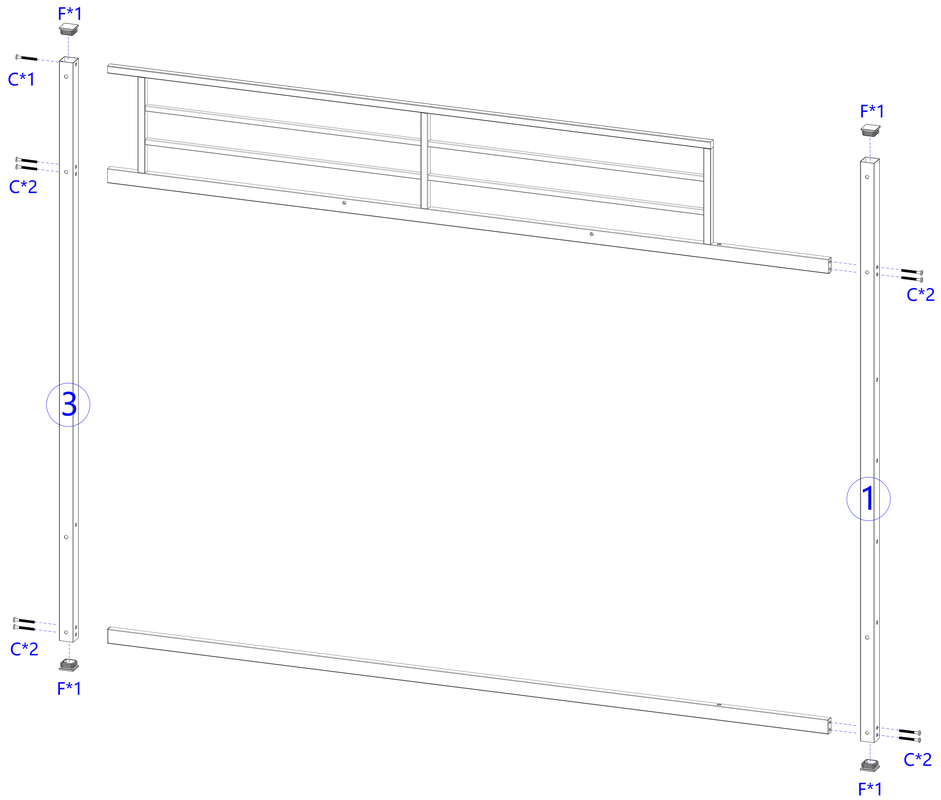

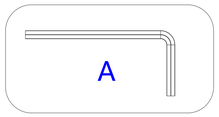

			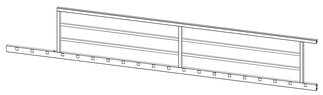	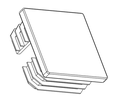 F 40FQ*34-4pcs C
3-1pcs	1-1pcs	8-1pcs	11-1pcs	M8*55-9pcs

Step 3: Use hardware A,B,C,D and connect #6 together.

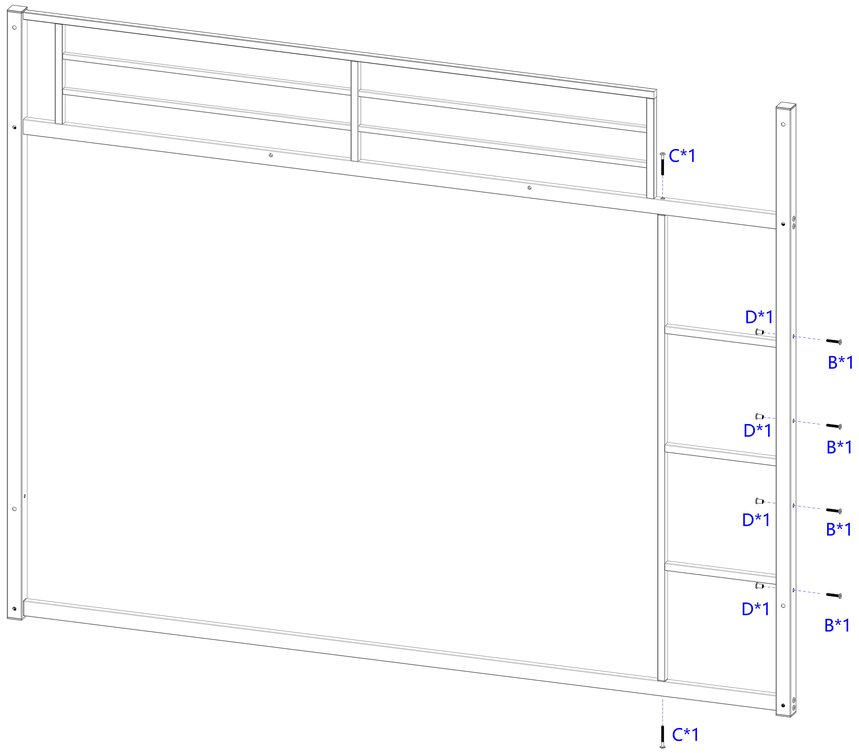

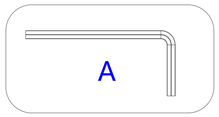

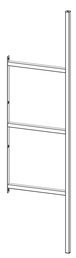	D	B	C
6-1pcs	ΦM8*16-4pcs	M8*35-4pcs	M8*55-2pcs

Step 4: Use hardware A,C,D and connect#5 together.

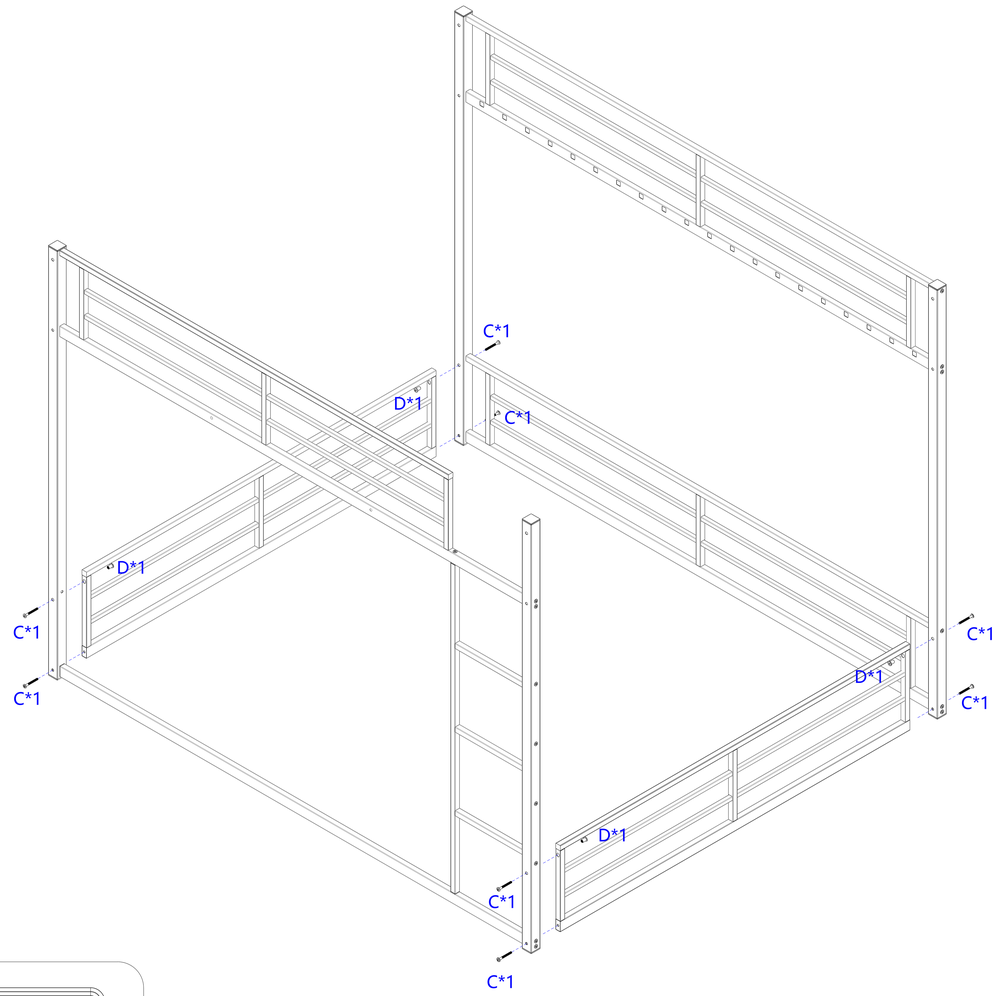

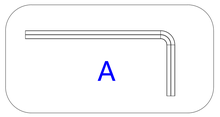

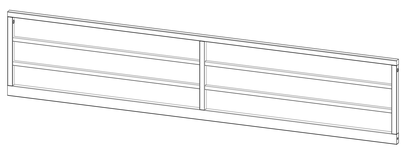	D	C
5-2pcs	ΦM8*16-4pcs	M8*55-8pcs

Step 5: Use hardware A,B,C,D and connect #9and #12 together.

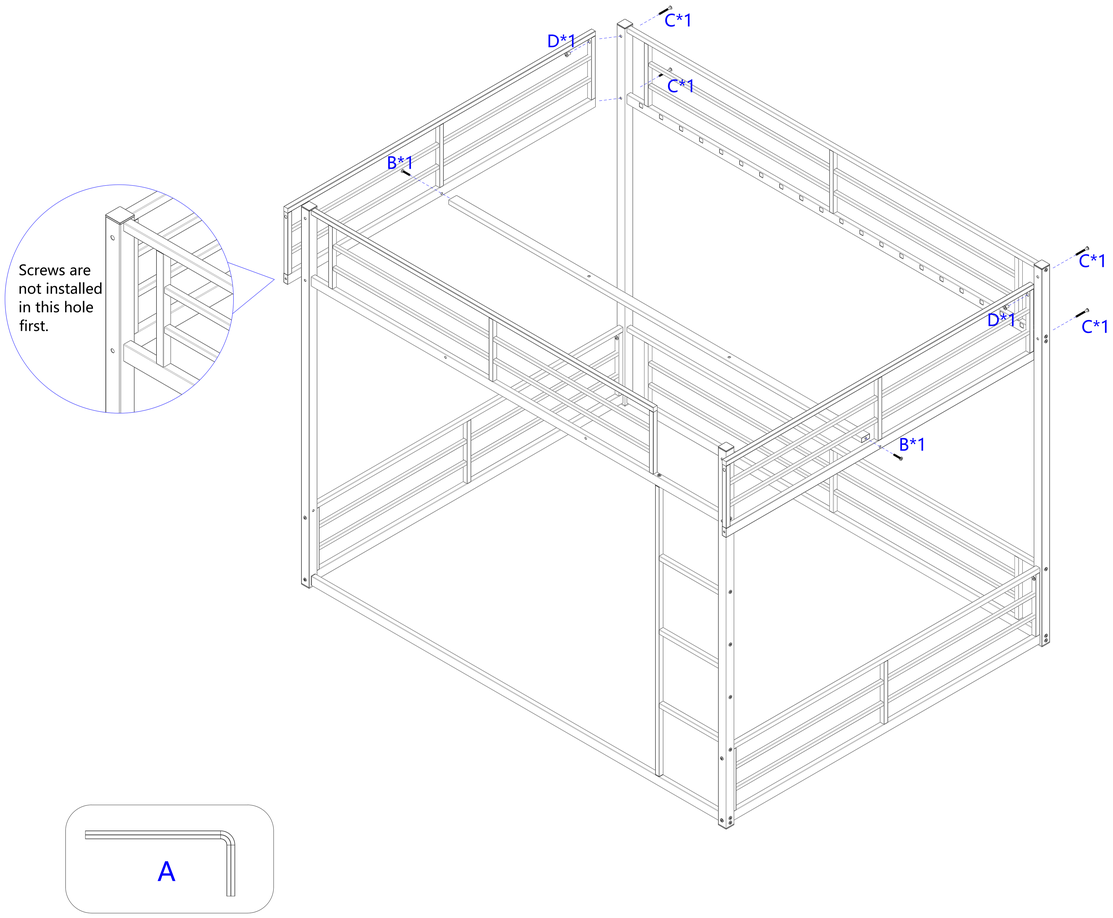

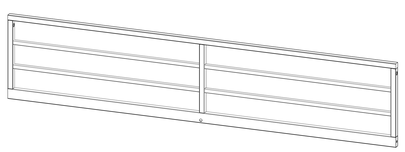		C	D ΦM8*16-2pcs B
9-2pcs	12-1pcs	M8*55-4pcs	M8*35-2pcs

Step 6: Use #13 and #14 to insert #10,#11 into the corresponding square hole.

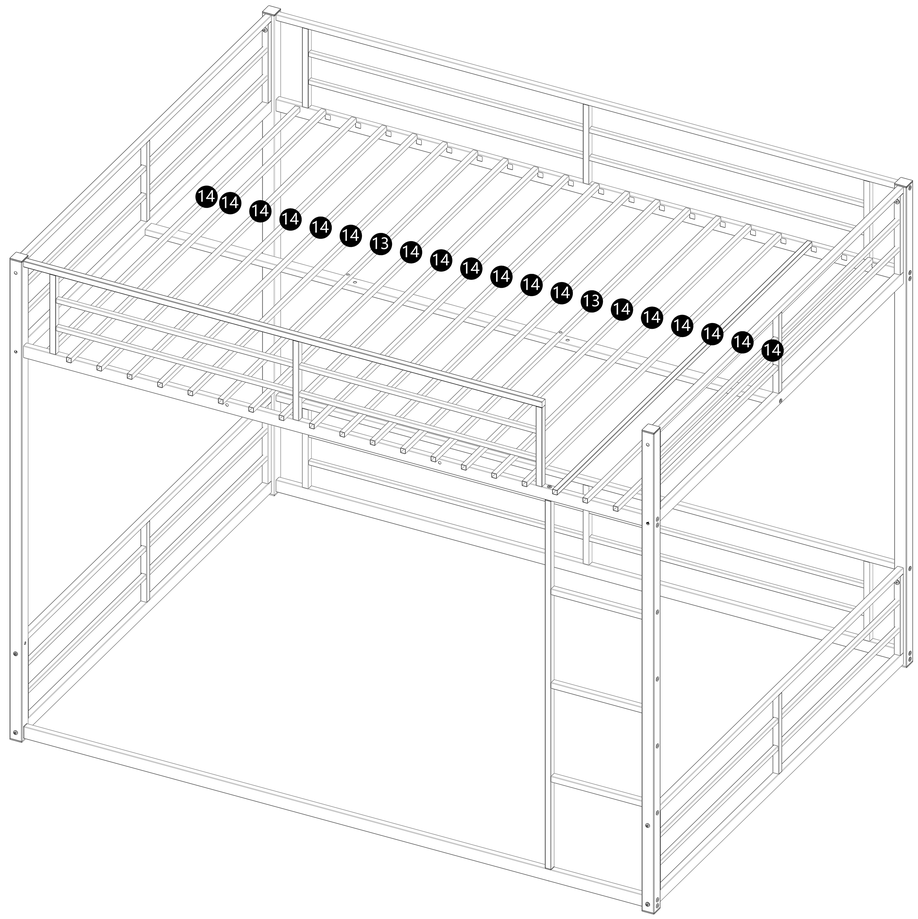

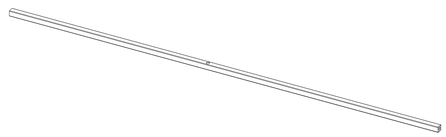	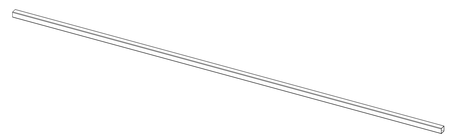
13-2pcs	14-18pcs

Step 7: Use hardware A,C and D to tighten the #1,#3 and #9 connections, hardware H and A to tighten the #10,#11 and #13 connections, and hardware A,D,H to tighten the #13 and #12 connections.

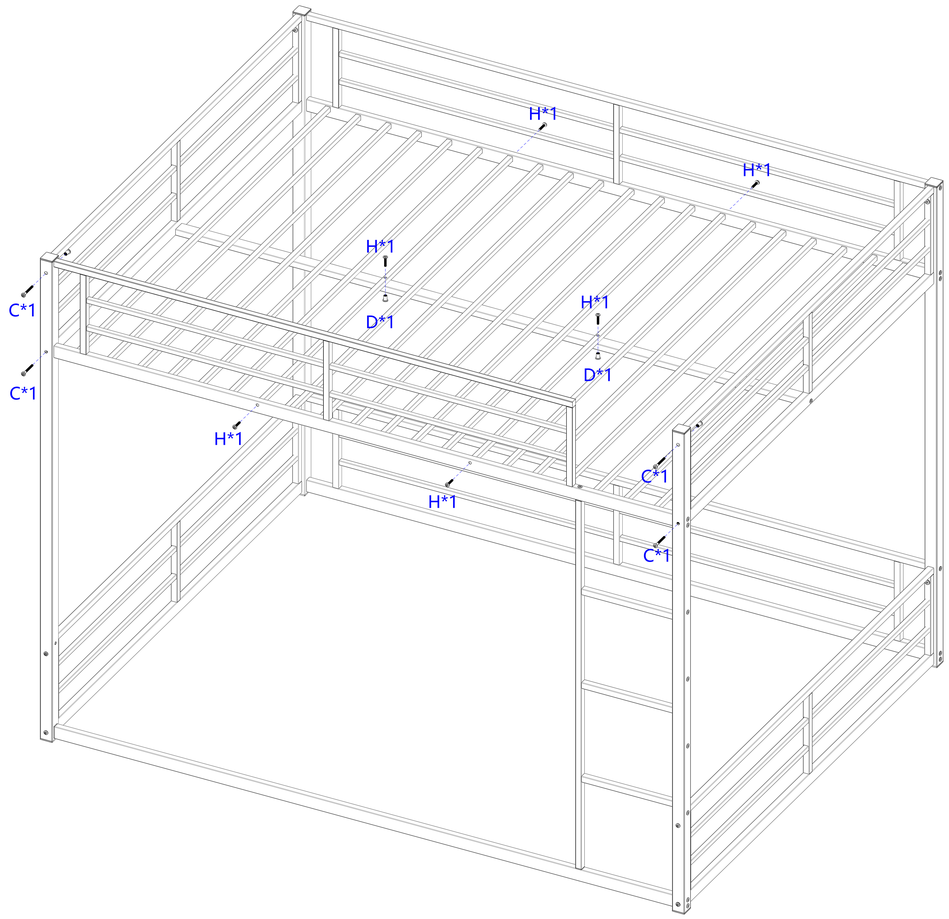

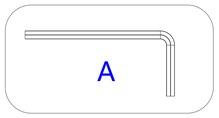

D	H	C
ΦM8*16-4pcs	M8*30-6pcs	M8*55-4pcs

Completed attic bed

Fix the wall, prevent movement, selective installation

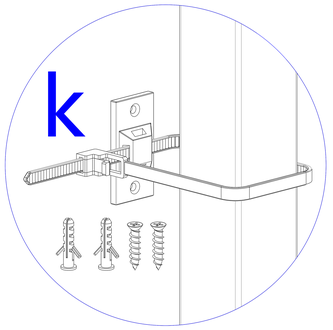

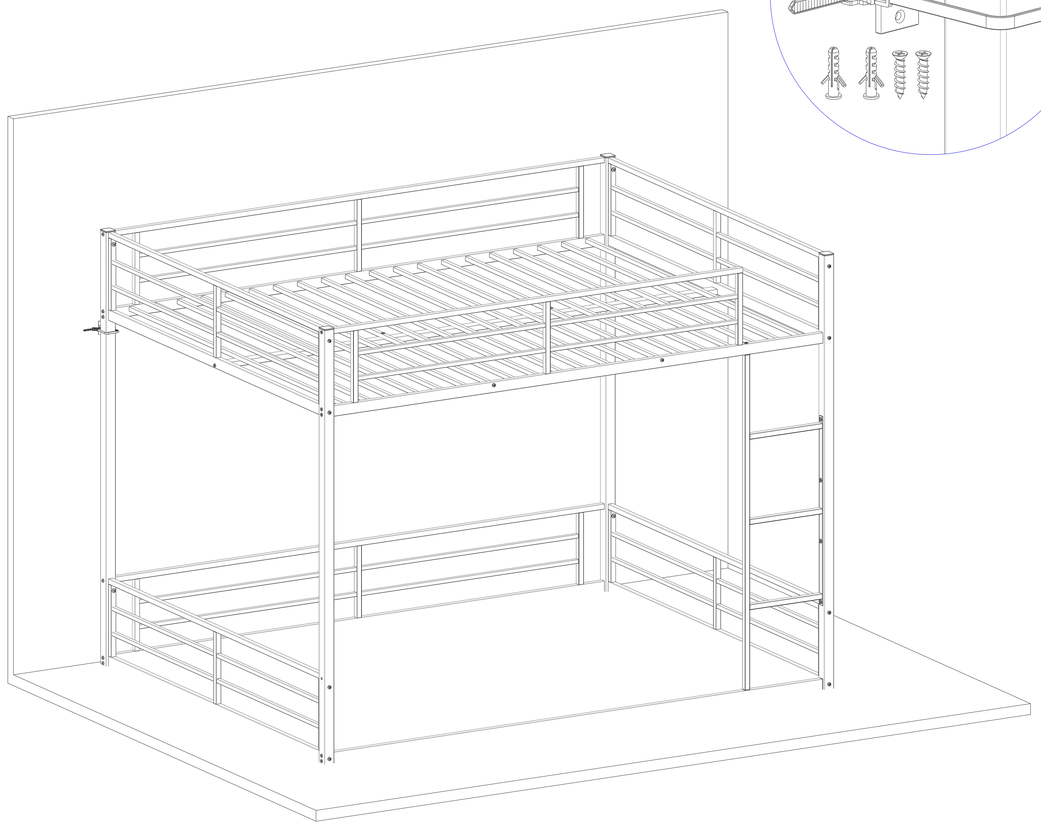

Note: Tighten all the steps before use, thank you.

Recyclable garbage