Assembly Instructions

Caution : You must read this before you proceed

TABLE

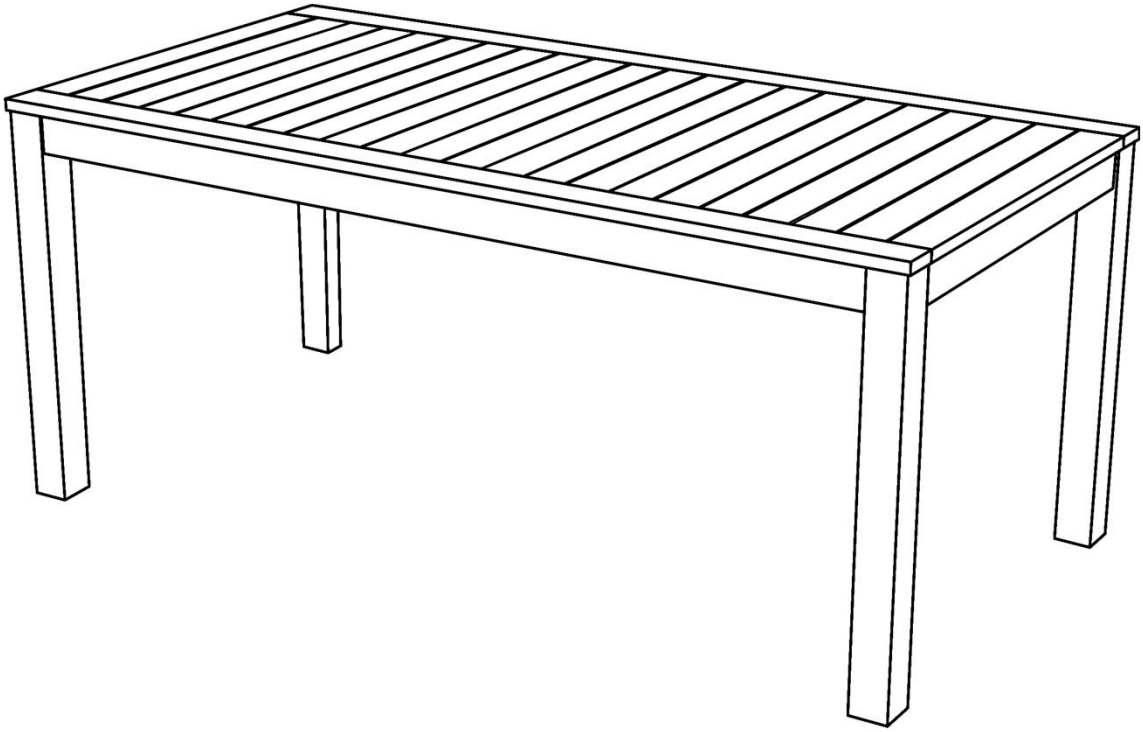

CAUTION : This Table is NOT a TOY.
Keep your child / children at bay in the process of assembly.
For turning the Table and to prevent damage to the Table, 02 persons may be needed to execute this action.

Parts List

Label	Picture	Description	QTY
A	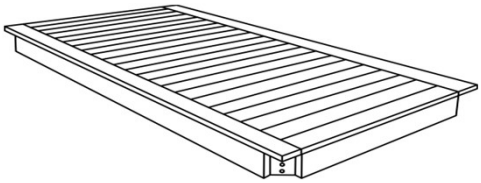	Table Top	1
B		Leg	4

Hardware

Label	Picture	Description	QTY
①		Bolt (M8x55mm)	9
②		Spring Washer (M8.5/10.5x2mm))	9
③		Flat Washer (M8.5/16x2mm)	9
④		Allen Key	1

Assembly Preparation

Before Beginning Assembly:

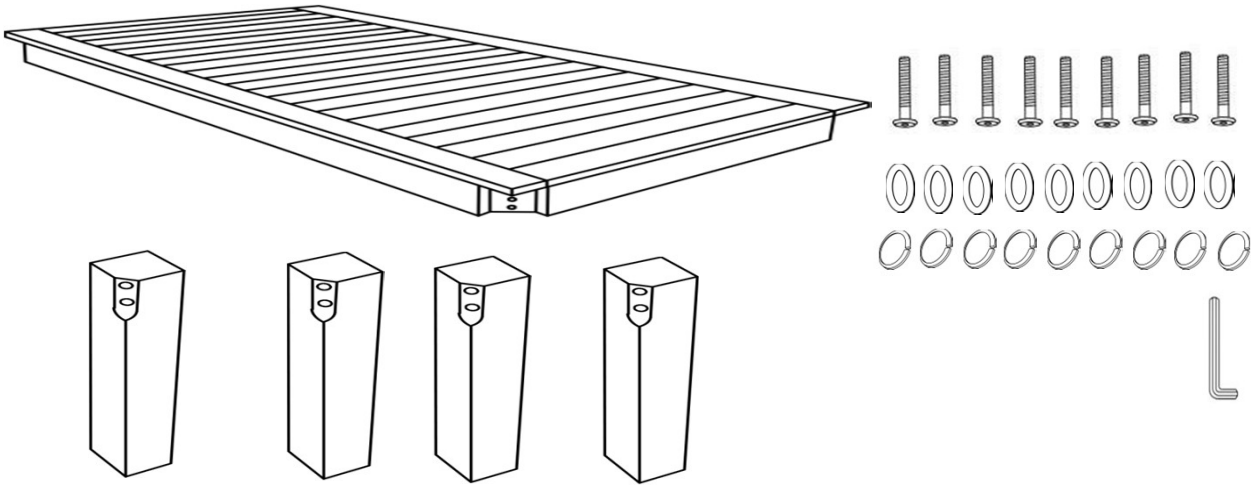

- Read instructions, cover to cover-
- Have 2 adults on hand for assembly-
- Do not assemble on flooring or carpet-
- Assemble on a clean non-marring surface (packing foam)-
- Save all packaging until finished-

Assembly Steps

Overview

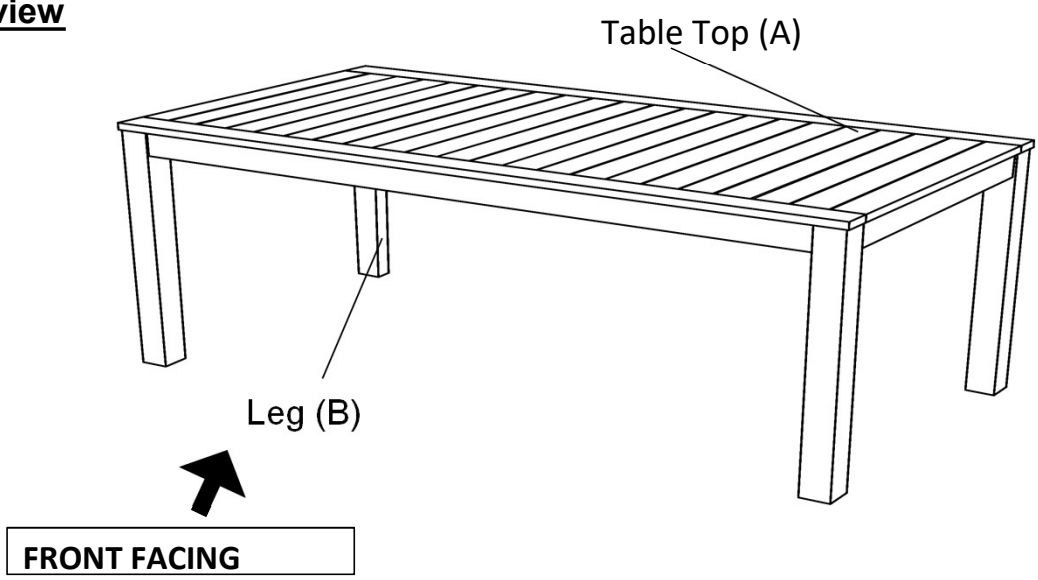

This Table has multiple parts and may require up to 30 minutes to assemble. To give you an overview of the Table parts, the above picture is to help you put the various parts into perspective. Please read through the instructions below to familiarise yourself with the parts and steps before assembly.

Step 1

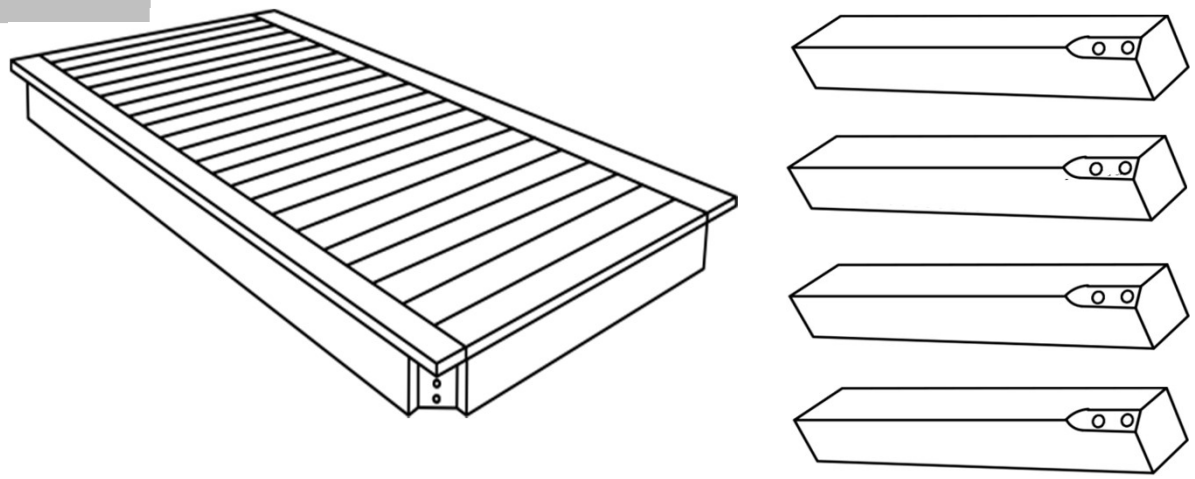

Unpack and place all parts on a clean, non-marring surface.

Step 2

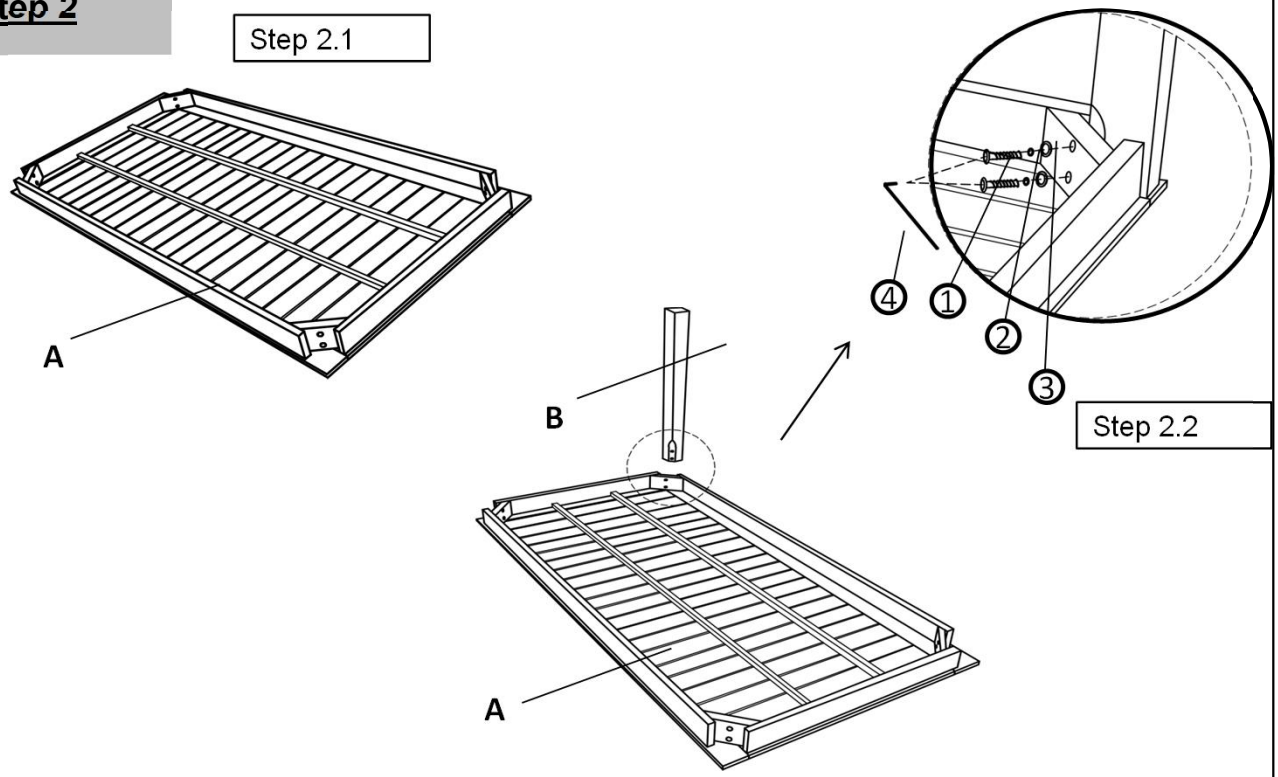

2.1) With assistance from your adult partners, turn the Table Top (A) up side down as picture shown

2.2) Attach Leg (B) to Table Top (A) by using Bolt (①), Spring Washer (②), Flat Washer (③) and Allen Key (④)

Repeat the same process with the other 3 Legs (B)

Do not fully tighten the Bolts.

Step 3

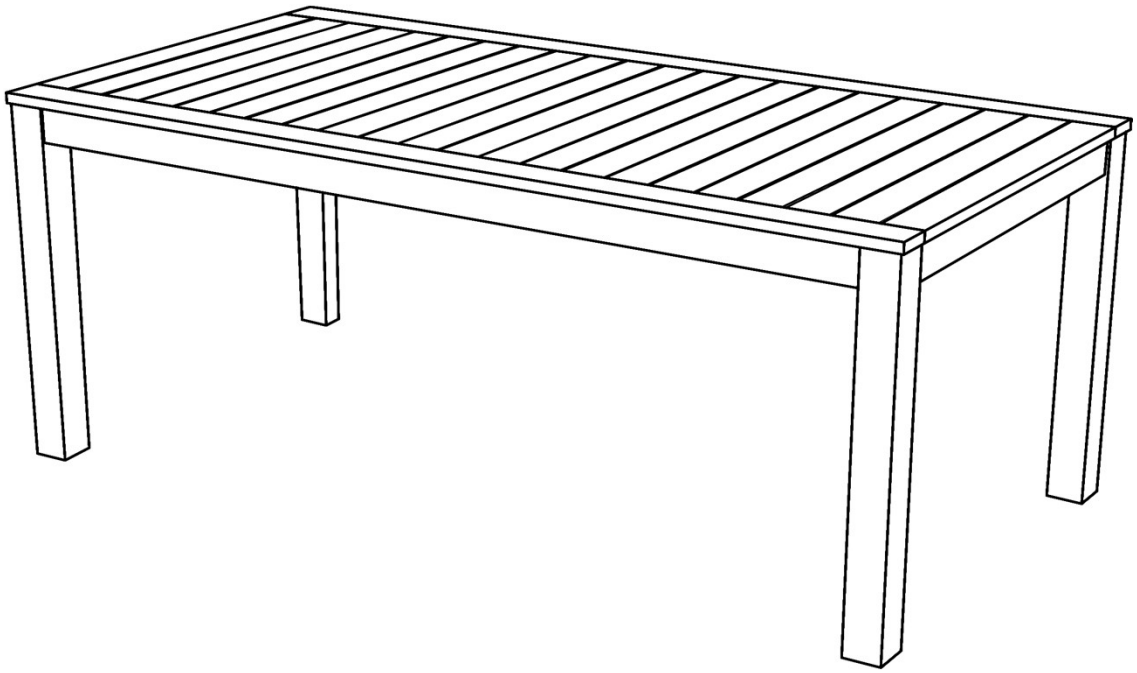

With assistance from your adult partners, turn the Table back to normal flat ground
EXERT pressure, floorwards, onto the Table.
This pressure will help the Legs and Table Top reach alignment at all joints.
Check for wobbles.
In a sequential manner, gradually tighten all Bolts until evenly secured.
Inspect the Table and make sure all parts are adequately connected.
Your Table is ready for use.
This Table can only be used on a flat, level surface.

Care & Maintenance

- Do not put hot items directly on furniture surface
- Do not clean furniture with harsh cleansers or polish.
- To obtain the longest lifespan of your outdoor prodcts, minimizing exposure to direct sunlight is recommended.
- Children should not climb or jump on the furniture.
- Do not write on furniture without a padded barrier to protect the
- To obtain the longest lifespan of your outdoor products, avoid extended and lengthy exposure to rain, snow, and direct sunshine. Whenever possible cover the product and /or place under patio or awnings.
- Not for commercial use. For residential use only .
- Stains may be removed with mild soap solution and damp cloth.

- Dust and pick-up spills using a clean, non-colored, lint-free cloth .