SKU:PH0_0RB40QS0 PH0_0RB41L0H

Bed Frame Installation Manual

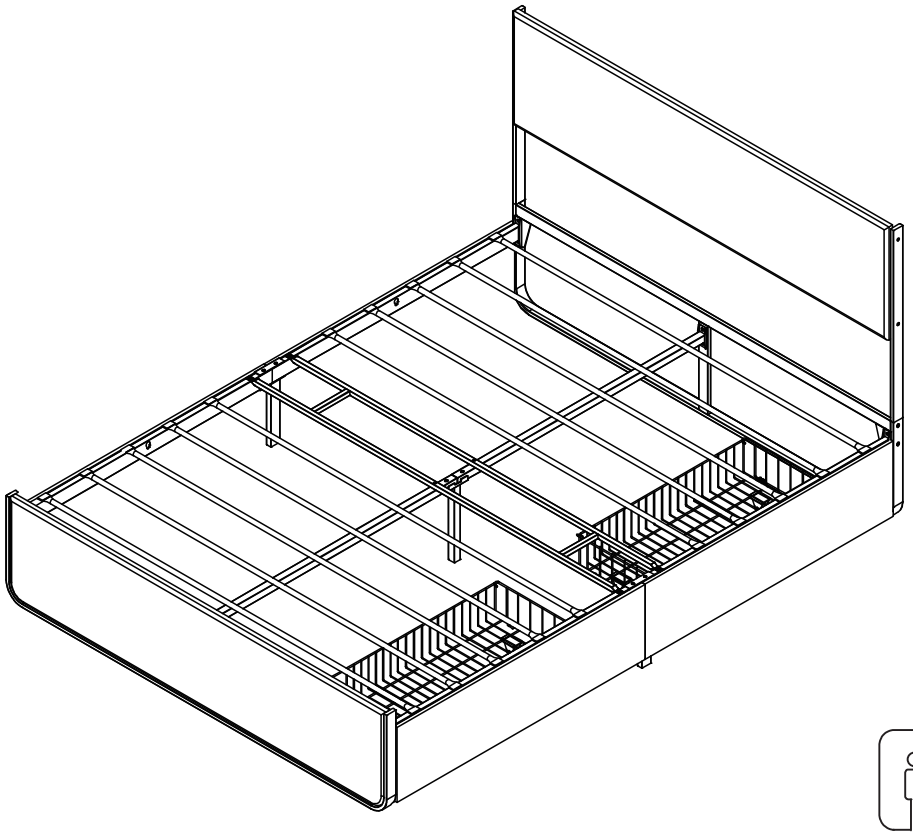

Team Assembly Recommended

Trouble shooting:

Missing / Wrong / Broken parts and installation issues

↓

Send email with your question, pic and order NO. to
support@idealhouse.vip

↓

Respond within 24 hours

↓

Issue resolved

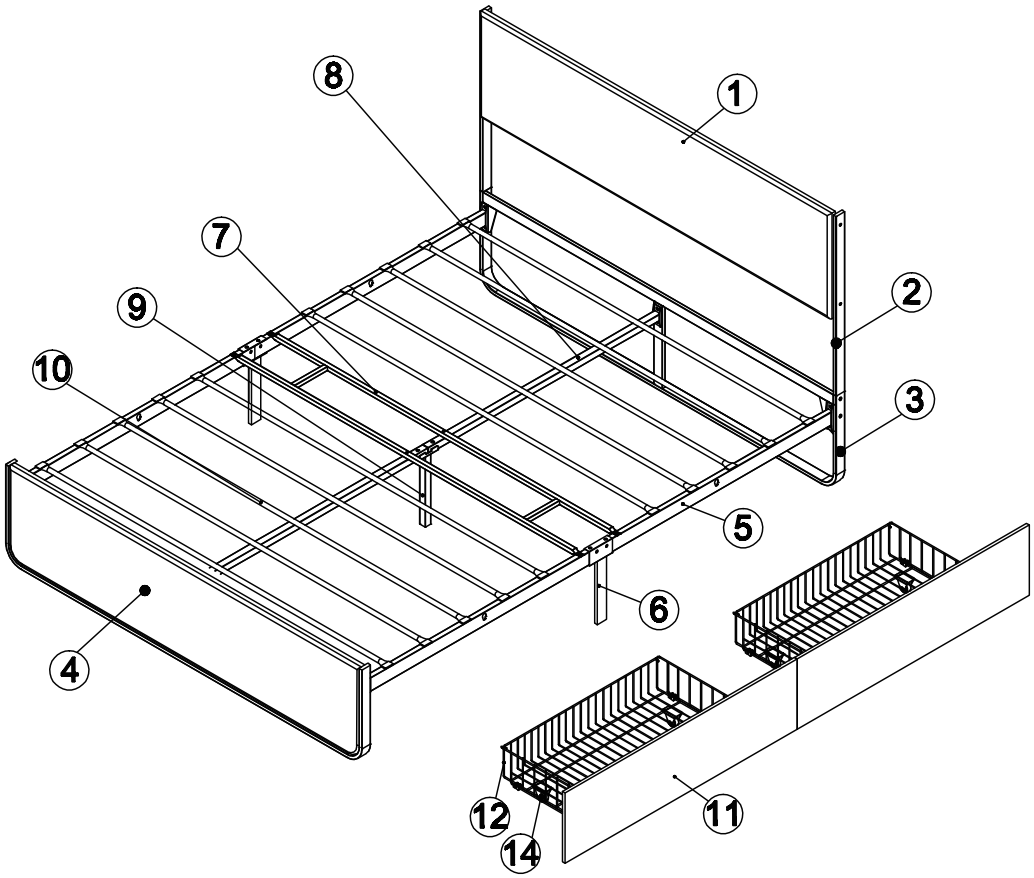

Note:Don't tighten all screws during installation.

Components

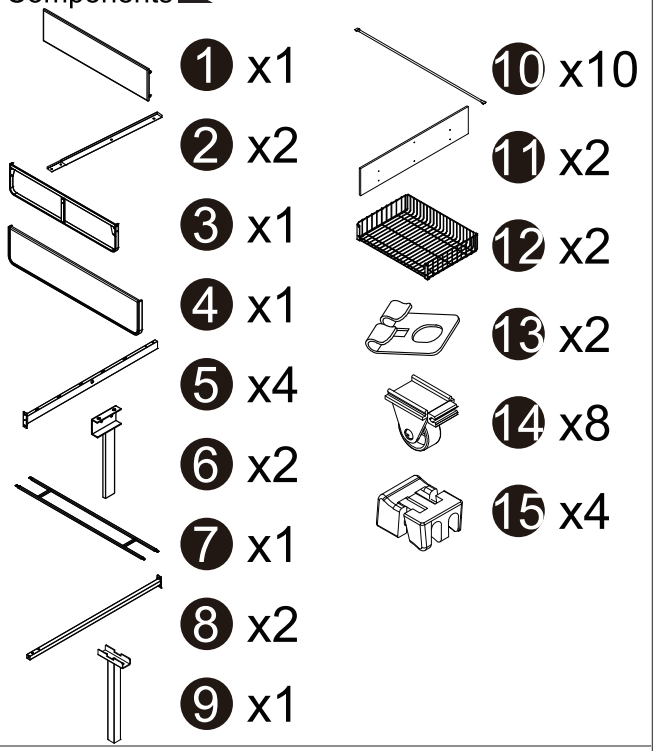

1 x1
2 x2
3 x1
4 x1
5 x4
6 x2
7 x1
8 x2
9 x1
10 x10
11 x2
12 x2
13 x2
14 x8
15 x4

Check all the components & screws before assembly.
Do not install in case part is missing, contact us to get.
Send email with your question to ***support@idealhouse.vip***
We will resend within 24 hours

Components

A		M6*12mm	x24
B		M6*35mm	x6
C		M6*45mm	x4
D		M8*15mm	x12
E		M8*35mm	x2
F		M6	x10
G		4#	x2

Check all the components & screws before assembly.
Do not install in case part is missing, contact us to get.
Send email with your question to ***support@idealhouse.vip***
We will resend within 24 hours

Step 1

M6*35mm	**B** x 4PCS
4#	**G** x 1PC

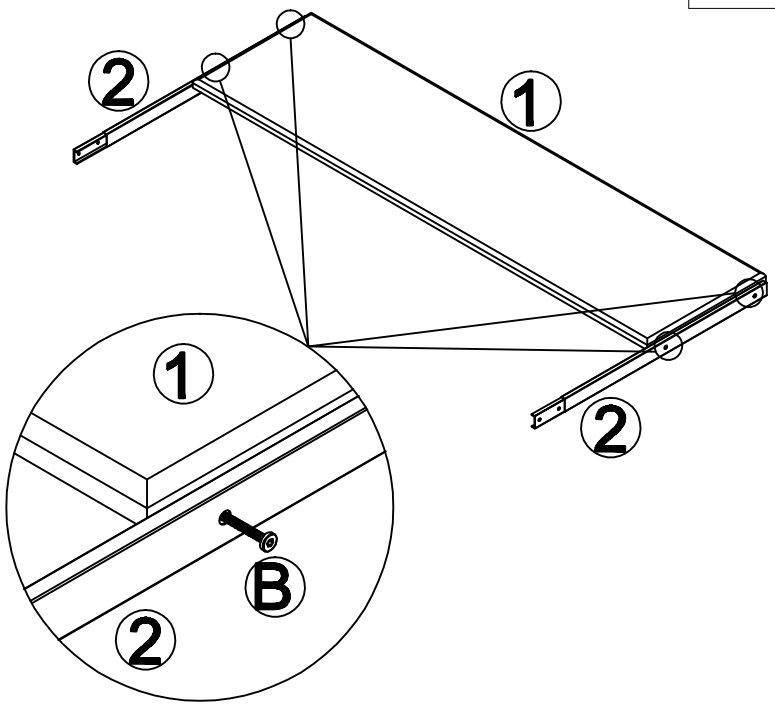

M6*12mm	**A** x 4PCS
4#	**G** x 1PC

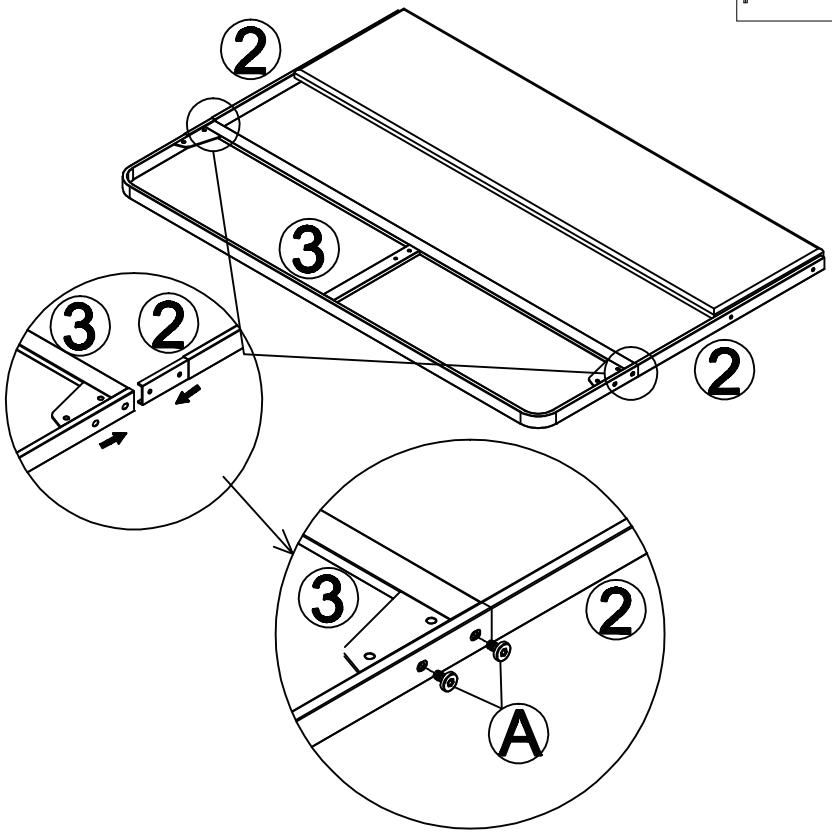

Step 2

M6*12mm	**A** x 4PCS
M6*45mm	**C** x 4PCS
M6	**F** x 8PCS
4#	**G** x 2PCS

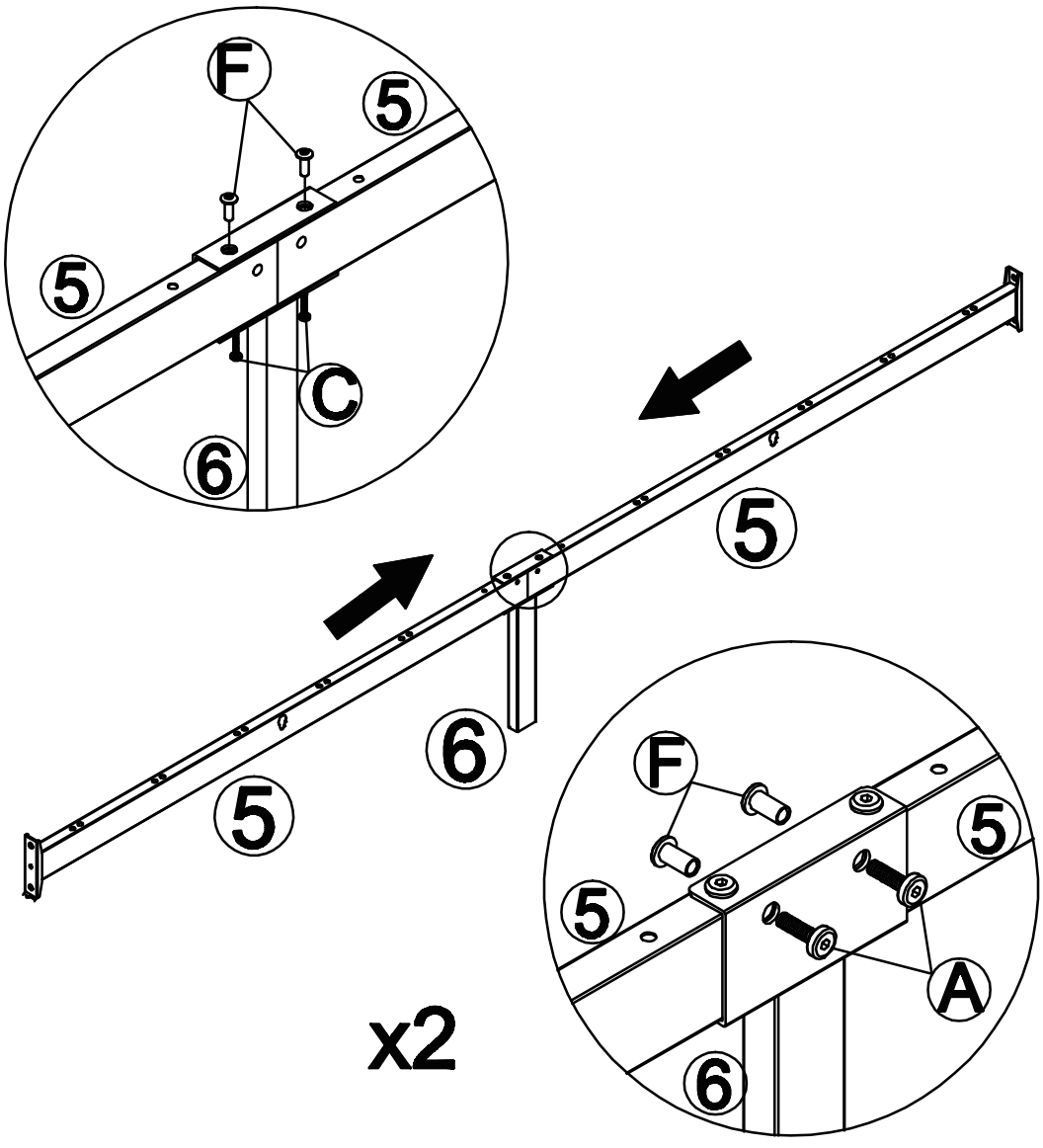

Step 3

M8*15mm	**D** x 8PCS
4#	**G**x 1PC

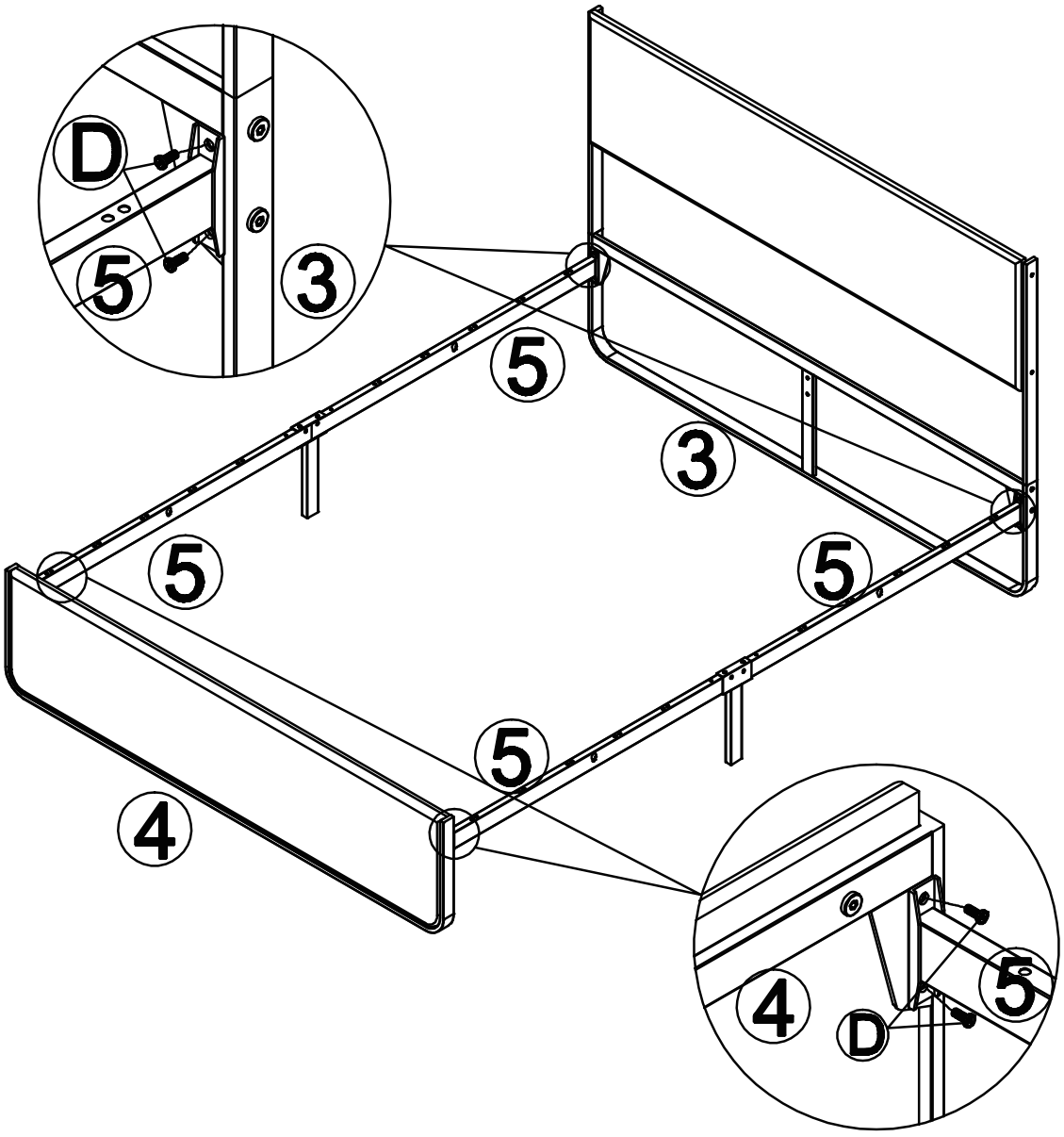

Step 4

M6*12mm	**A** x 4PCS
4#	**G** x 1PC

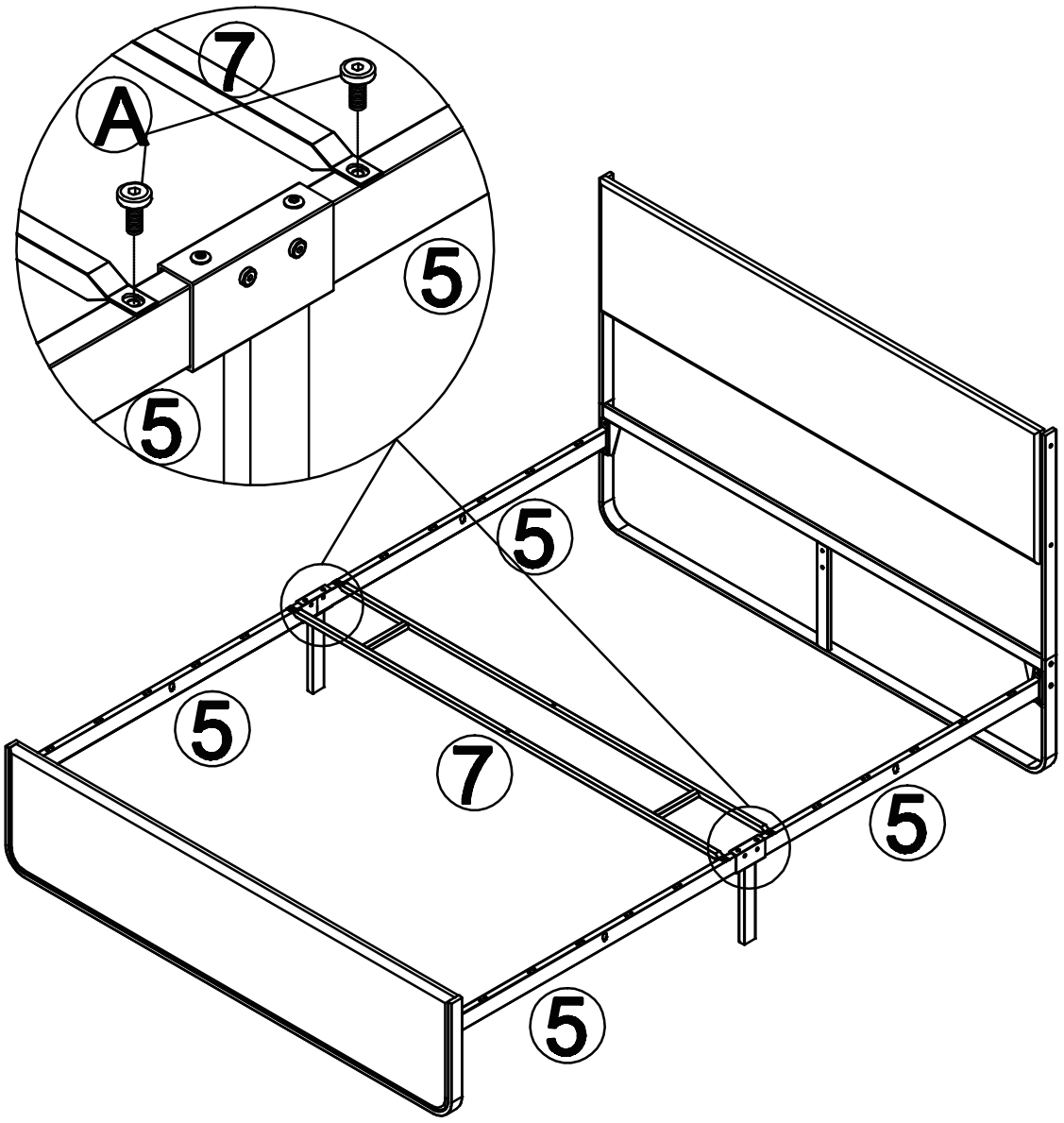

Step 5

M6*35mm	**B** x 2PCS
M6	**F** x 2PCS
M8*15mm	**D** x 4PCS
M8*35mm	**E** x 2PCS
4#	**G** x 2PCS

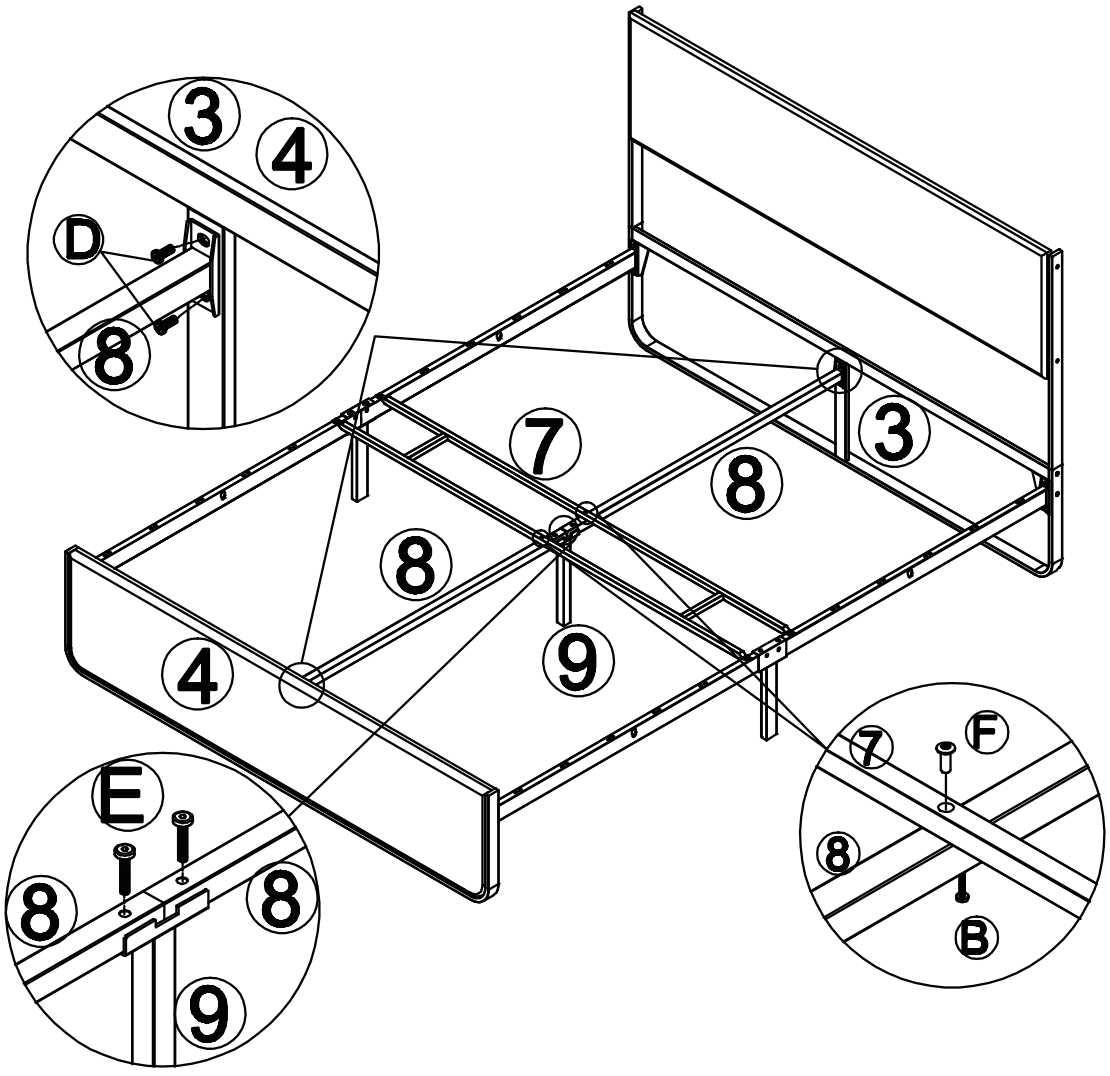

Step 6

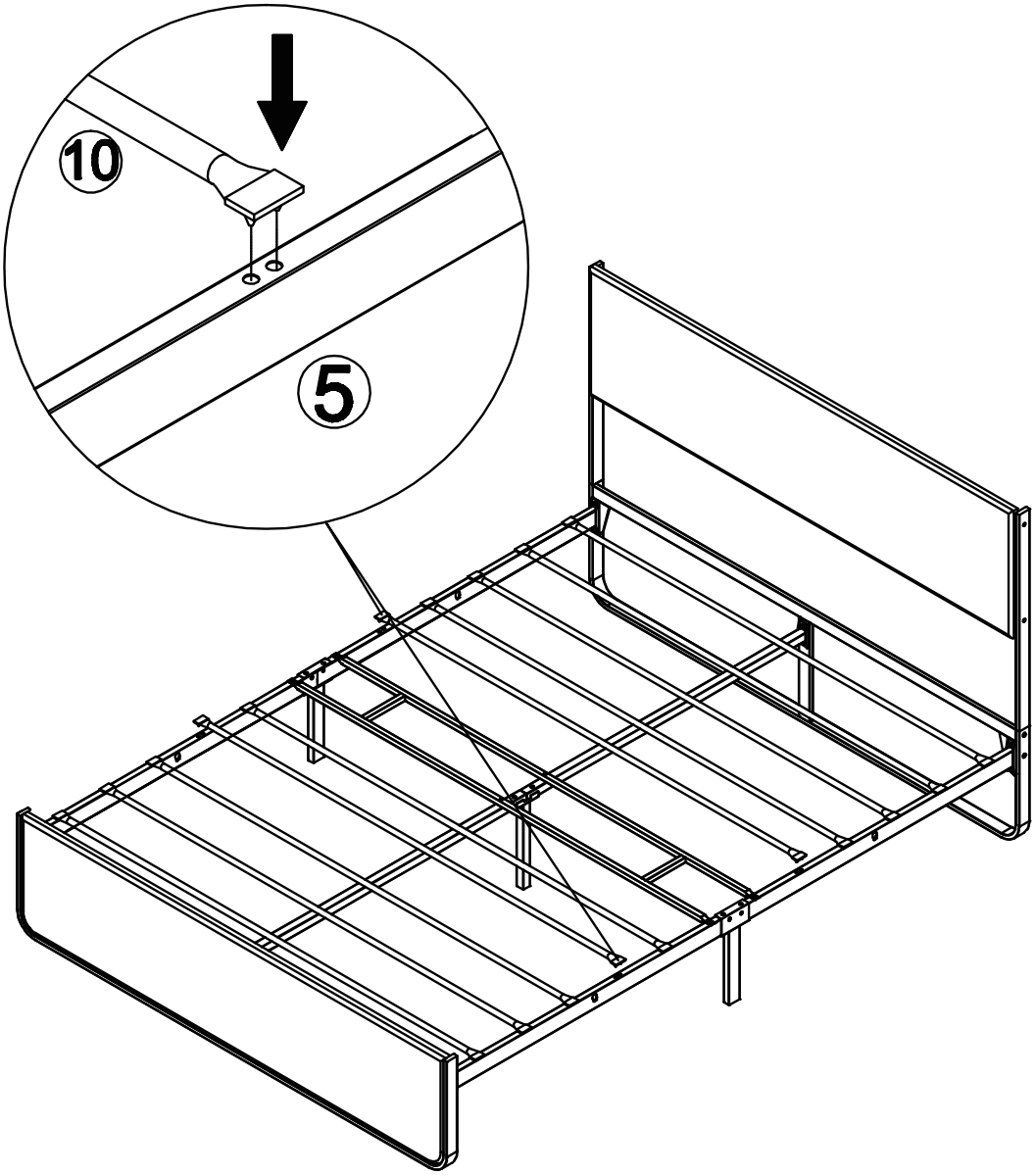

Step 7

	14 x 8PCS
	15 x 4PCS

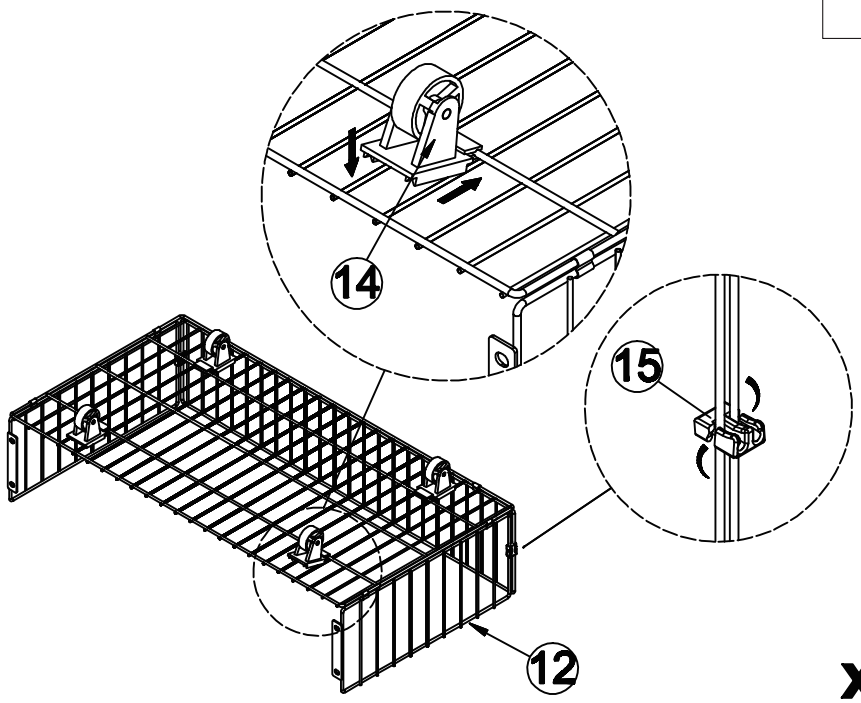

x 2

M6*12mm	**A** x 8PCS
4#	**G** x 1PC

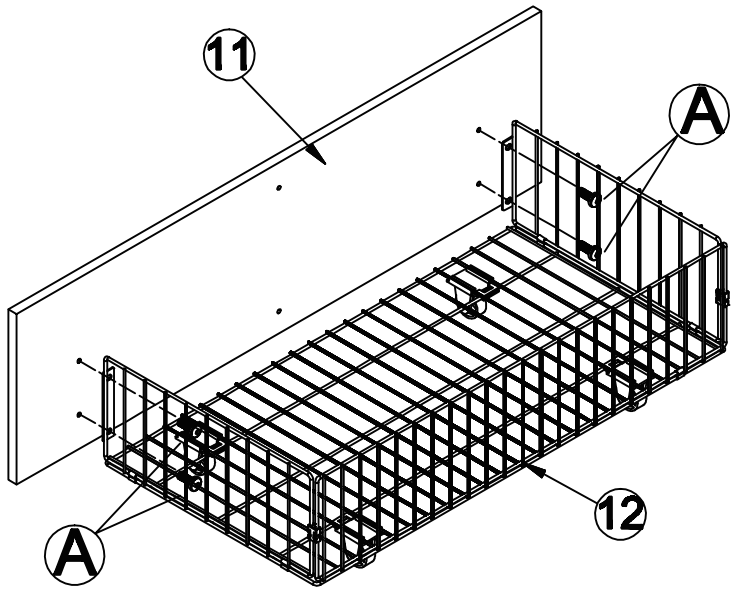

x 2

Step 8

M6*12mm	**A** x 4PCS
	13 x 2PCS
4#	**G** x 1PC

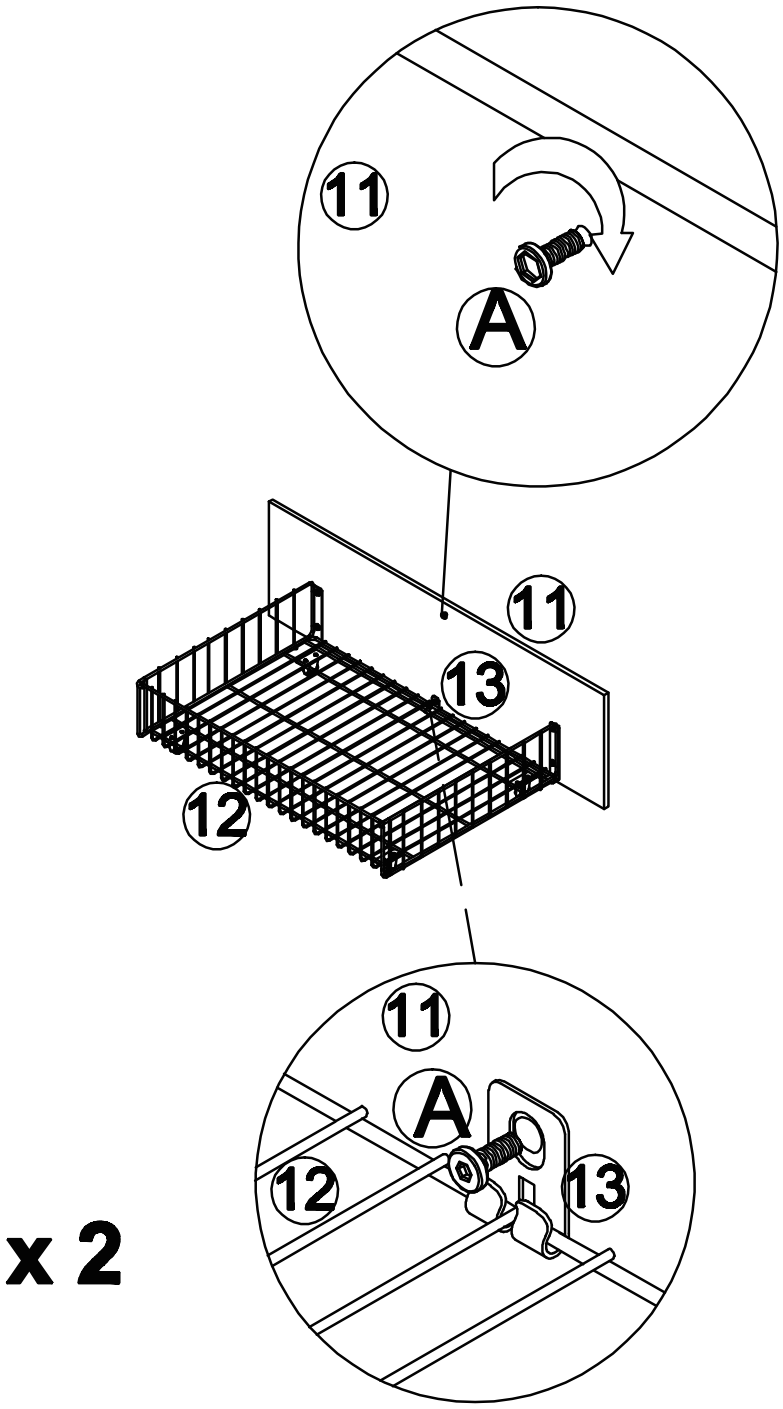

x 2

Step 9

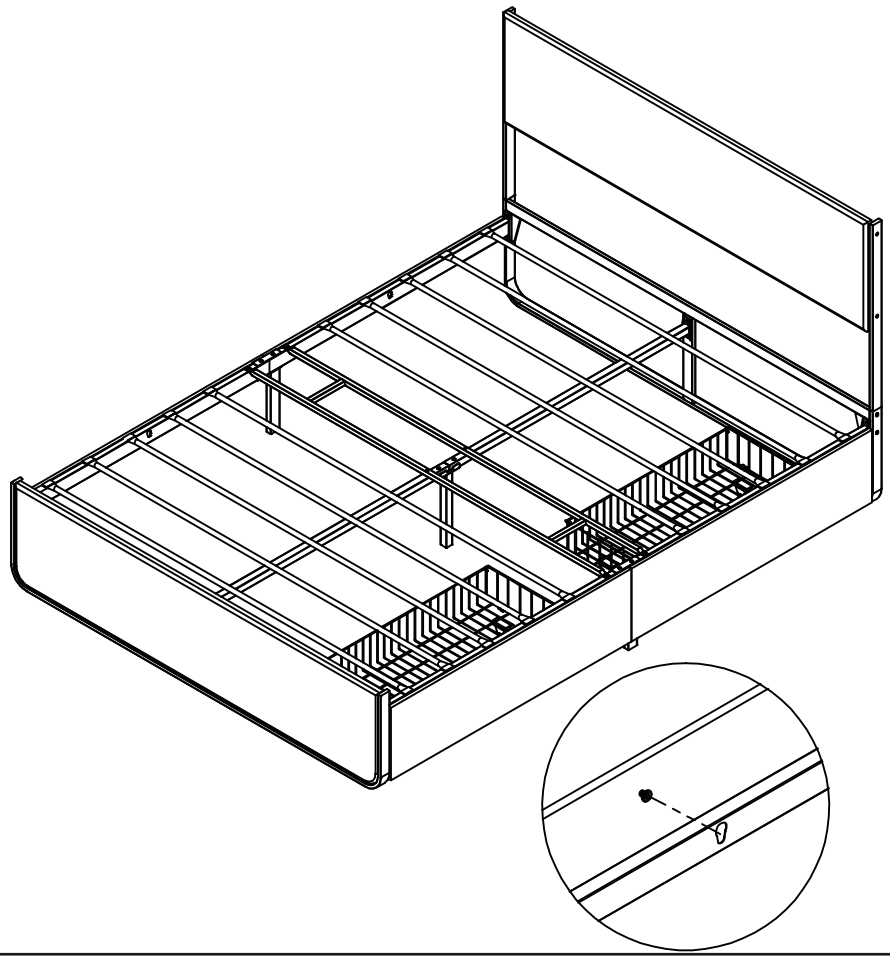

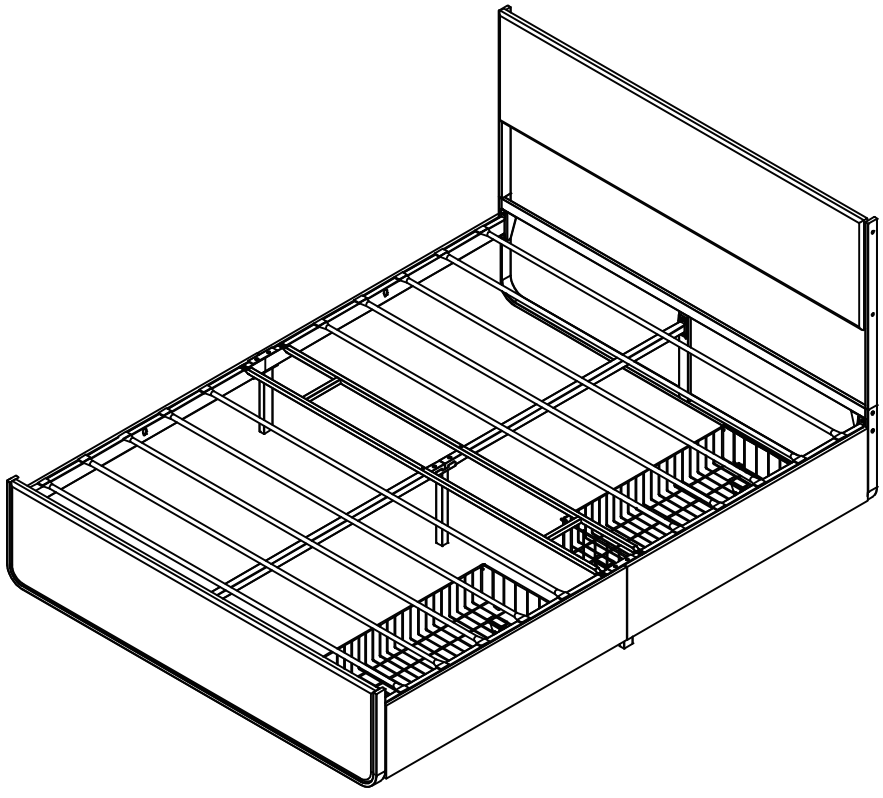

IMPORTANT SAFETY INFORMATION

Please carefully read the instructions and caution warnings below before assembling the product. Following this guide will ensure that you install, use and maintain the product properly.

- Please keep this installation and user manual/instructions for future reference in case you need to assemble the product.
- Do not assemble if you notice serious damage such as cracks or bends.
- During installation, please use work gloves for hand safety.
- Please assemble the unit on carpeted floor or the flat cardboard box to avoid scratching the surface or your floor while assembling on the floor.
- To assemble, please use the complimentary installation tools (Allen Wrench). Pay more attention to the direction of components at each steps.
- It is recommended that two people work together to assemble the product.
- Please do not tighten the screws up too much, just to 80% before you finish to make the installion go on successfully.

RETURN POLICY

We believe you will absolutely love your new product. But for some reason you want to return your item, please contact us within 30 days after receiving and ensure that the product which you want to return is in a good condition in the original box with all original certificates of purchase, manuals and accessories attached.

HOW TO MAINTAIN YOUR PRODUCT:

- Check the screws of the product are not loose from regular use.
- Do not use sharp instruments, rubbing alcohol, corrosive chemicals, or abrasive cleaners to clean the product.
- Do not keep the product in a damp environment for a long period of time. The damp environment may cause the iron components to rust and the plates to bulge and crack.

CAUTIONS!



How to find us?

Customer Service

Email: support@idealhouse.vip