ASSEMBLY INSTRUCTIONS

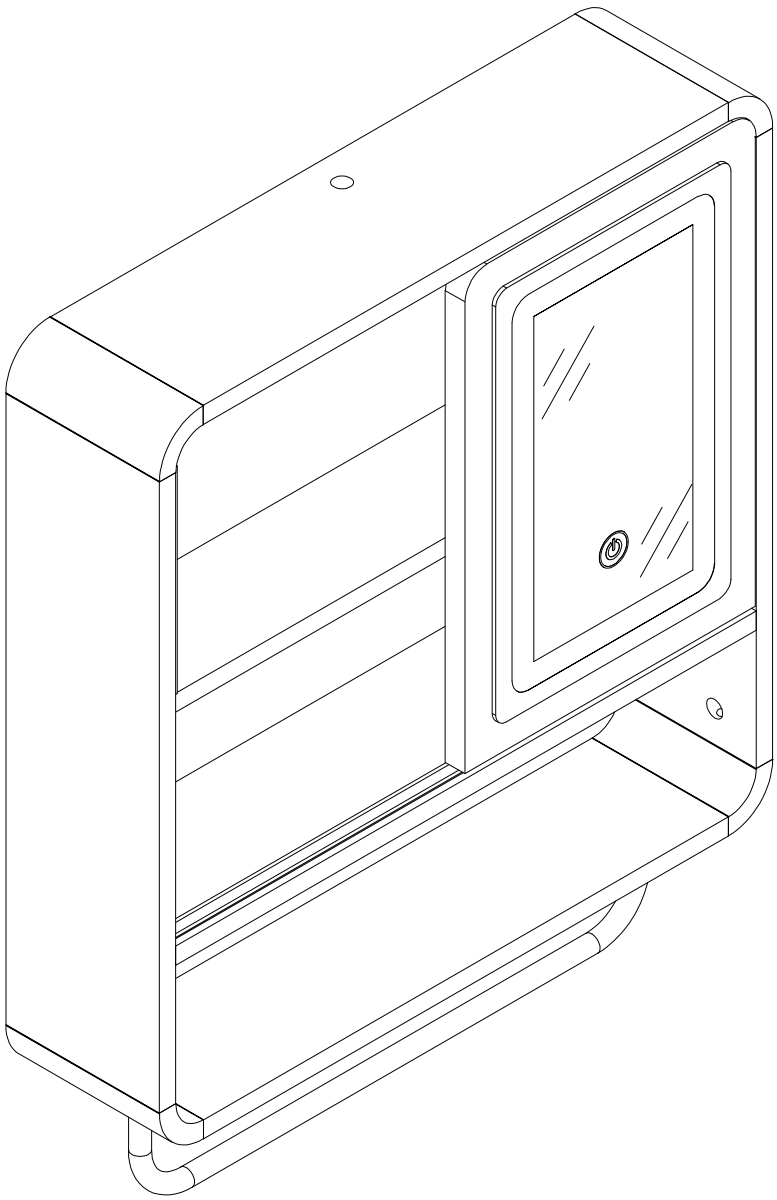

SAFETY TIPS:Static charge may cause dust on foam – clean with a dry or damp cloth.Small foam strands may be present – handle gently and dispose of properly.Do not burn or incinerate. Check local recycling guidelines.

Update 09 OCT 2025 Revison #:01

Before You Start

1.Read through each step carefully and follow the proper order.

2.Separate and count all your parts and hardware.

3.Give yourself enough room for the assembly process.

4.Assembly this product on the empty carton or carpet to avoid scratching.

5.Two people are recommended for ease in the assembly of this product.

6.Keep all small parts of this product away from children. They may cause serious injury.

7.Have the following tools: Flat Head Screwdriver, #2 Phillips Head Screwdriver and Hammer.

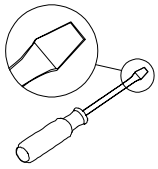
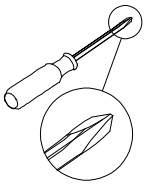
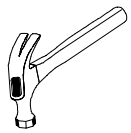

8.Power tools should not be used to assemble this product.

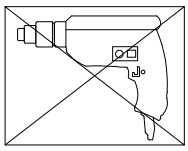

HOW THE KNOCK DOWN (KD) ASSEMBLY SYSTEM WORKS

1.Screw the Cam Bolt into the pre-drilled hole on the panel. Make sure Cam Bolt goes into the pre-drilled hole on the end of panel for Cam Lock.

2.Insert the Cam Lock into the pre-drilled large hole on the panel. Make sure the arrow on the face of Cam Lock points towards Cam Bolt.

3.Take a Phillips screwdriver and rotate the Cam Lock clockwise to lock the Cam Bolt.

4.Use the sticker to conceal the Cam.

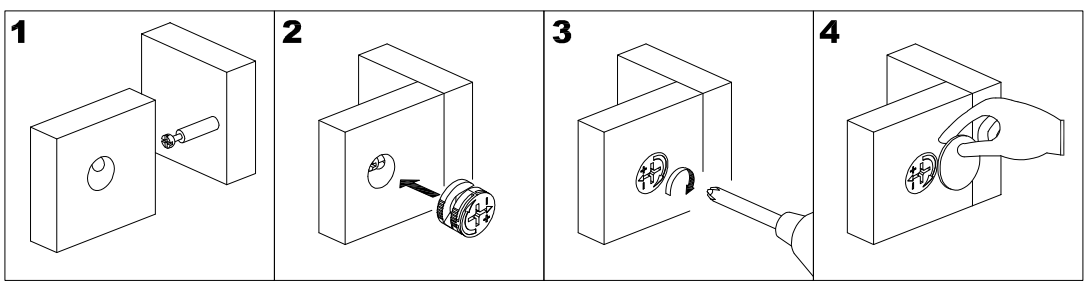

PARTS LIST

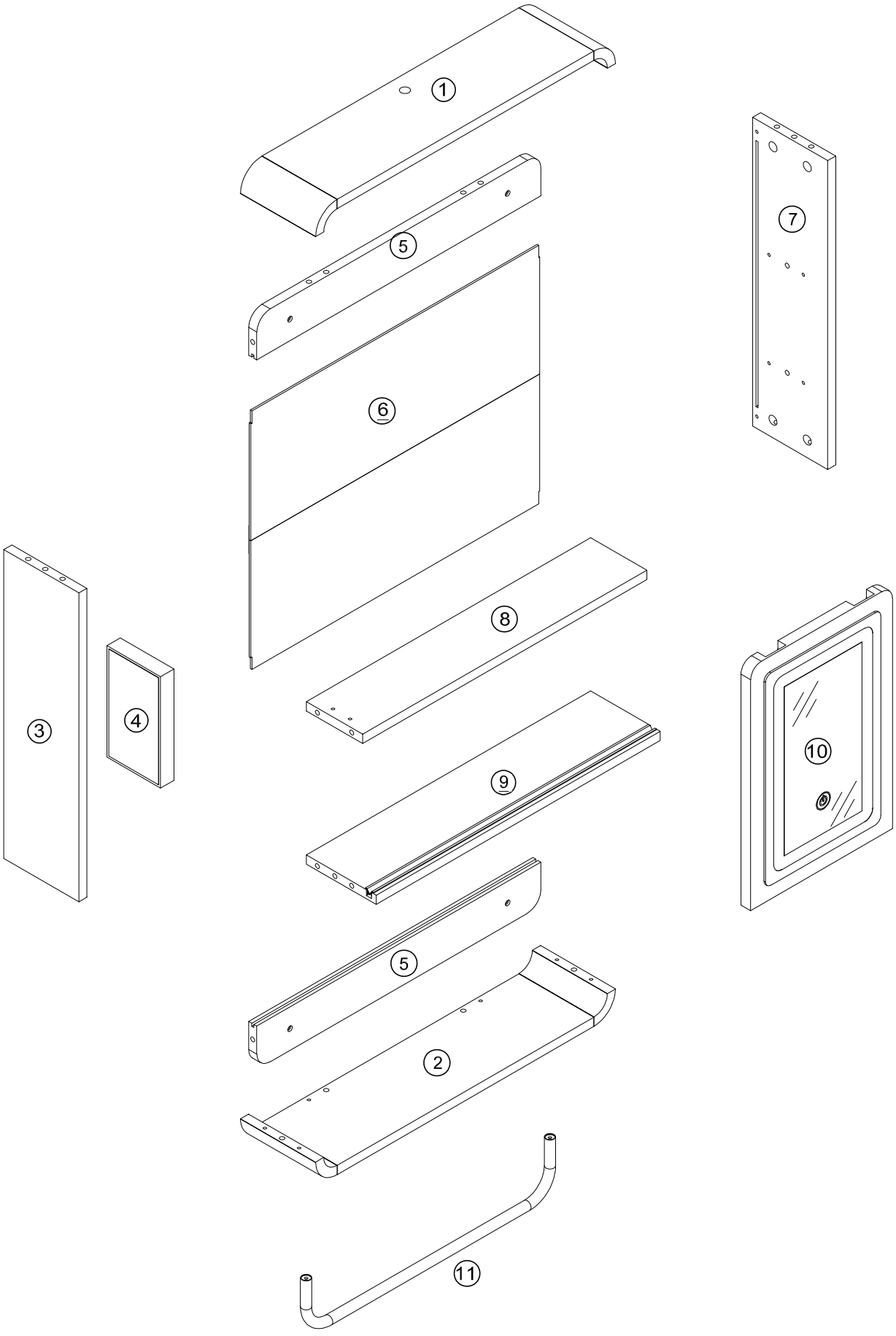

HARDWARE LIST

A	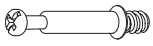	Ø6x35mm	Cam bolt	24	pcs
B		Ø15x11mm	Cam lock	24	pcs
C		Ø30mm	Cam cover	24	pcs
D		Ø8x30mm	Wooden dowel	12	pcs
E			Plastic wedge	8	pcs
F		Ø3x17mm	Flat-head screw	8	pcs
G		Ø4x57mm	Screw	4	pcs
H		Ø7x30mm	Wall anchor	4	pcs
I			Door wheel	2	pcs
J			Door wheel	2	pcs
K		Ø3x12mm	Screw	16	pcs
L		Ø6x12mm	Bolt	2	pcs
M		Ø4x19mm	Screw	2	pcs
N			Power adapter	1	pc
O		Ø4x15mm	Screw	4	pcs
P	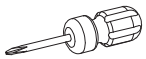		Short screwdriver	1	pc
Q			Plate	2	pcs
R		Ø8mm	Rubber bumper	4	pcs
S		Ø13x1mm	Flat Washer	4	pcs

STEP 1

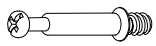

Ax24

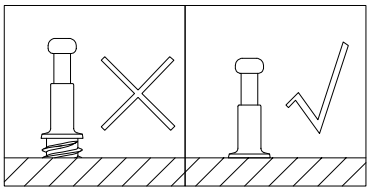

STEP 2

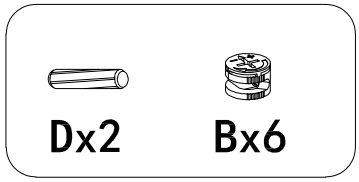

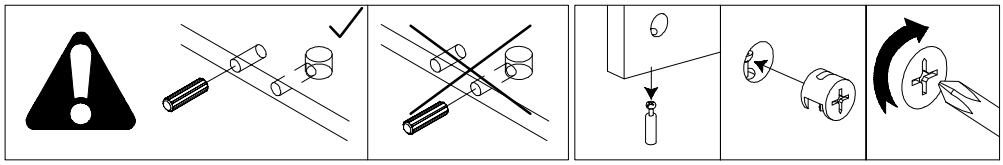

STEP 3

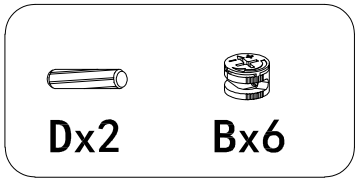

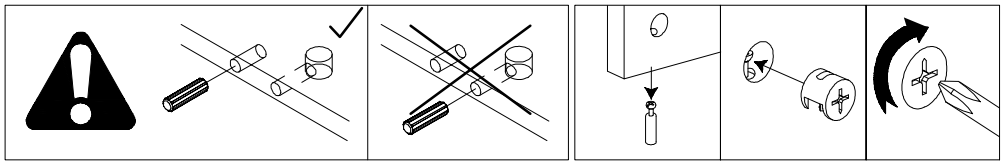

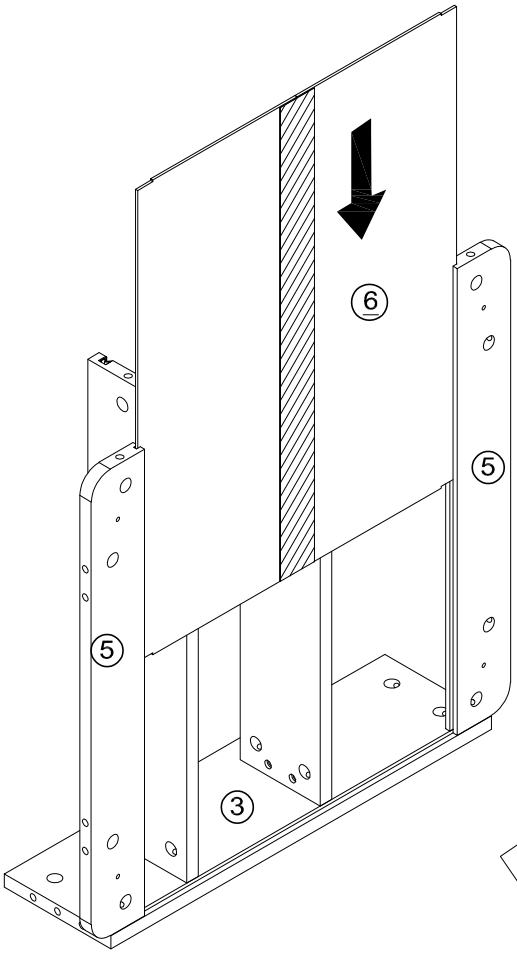

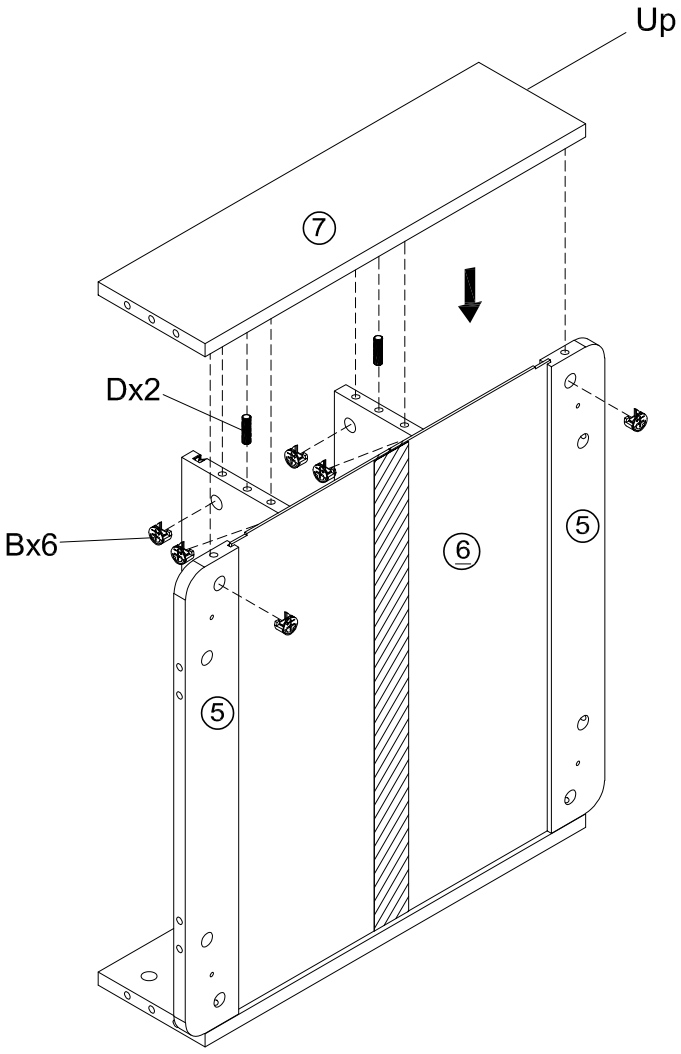

STEP 4

Bx12 Dx8

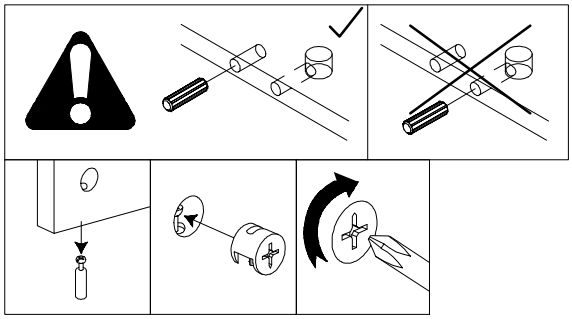

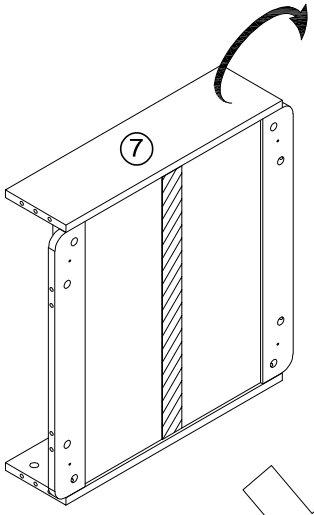

An assistance is required with this step.

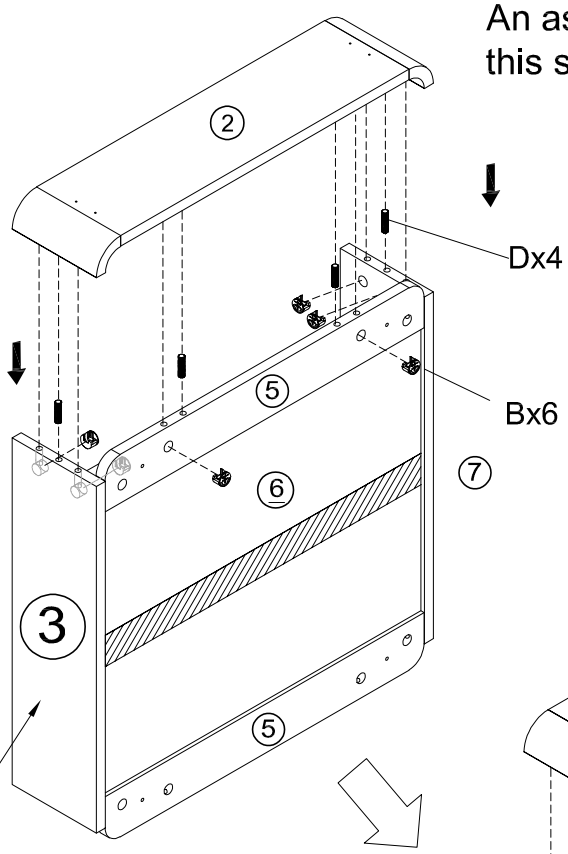

Note the direction of part (3).

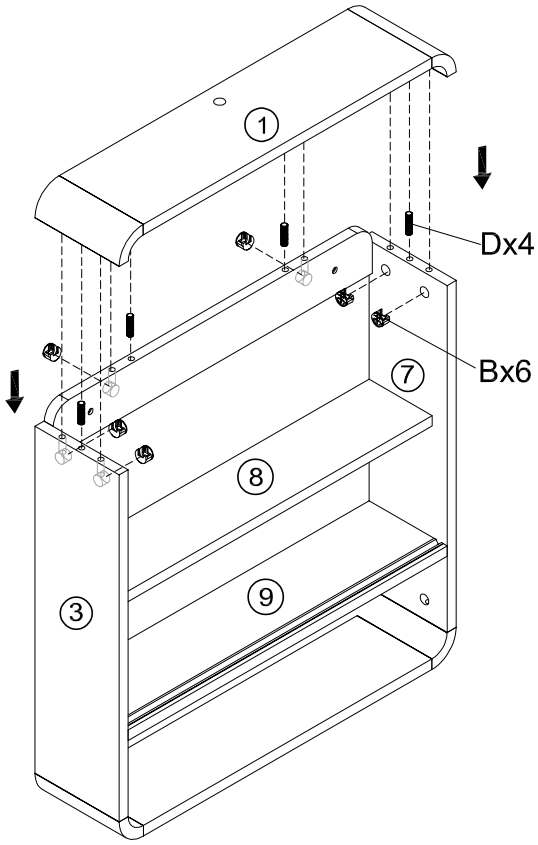

STEP 5

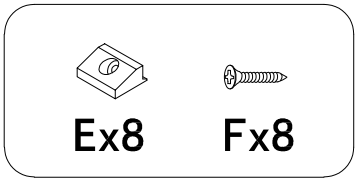

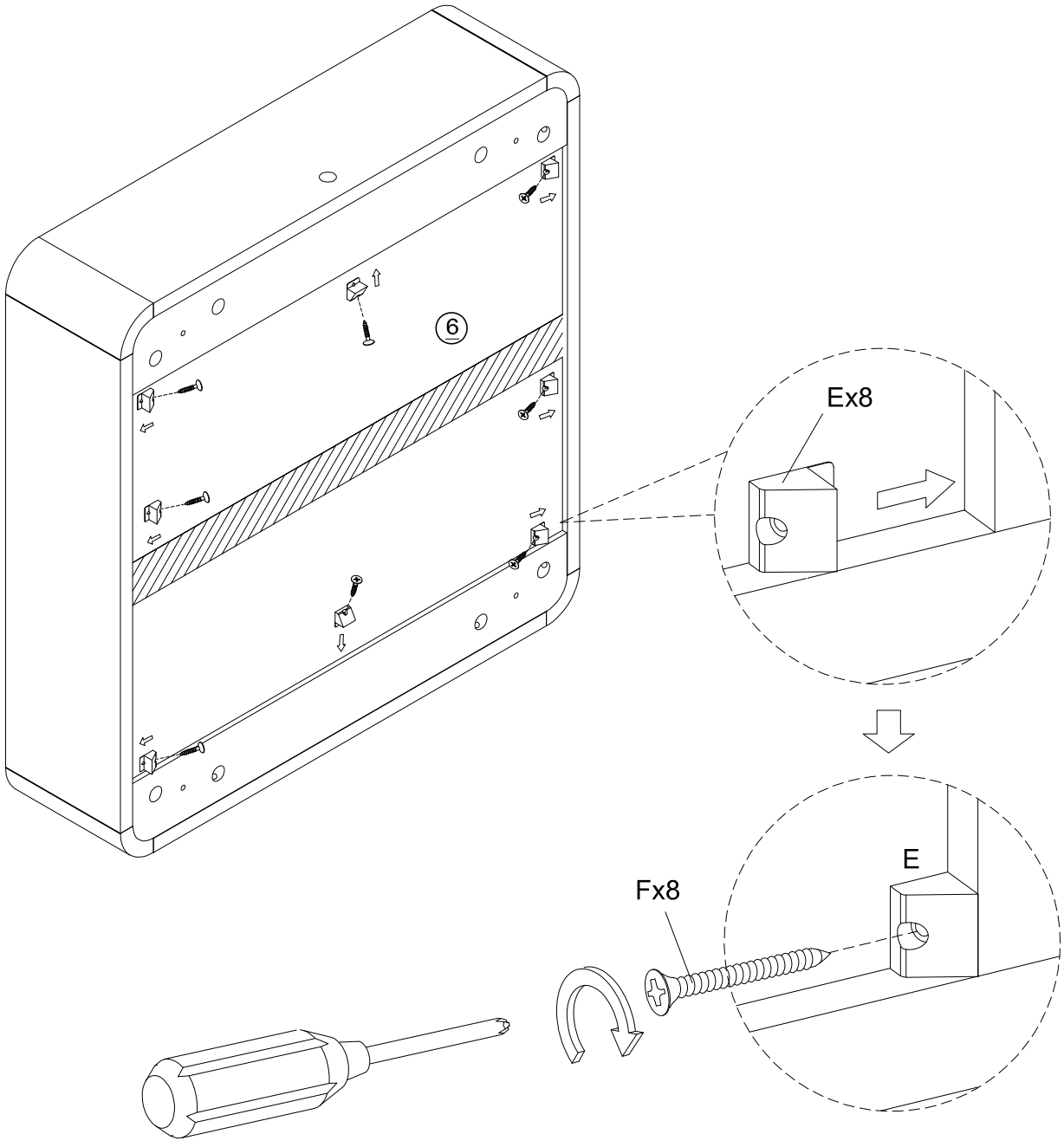

STEP 6

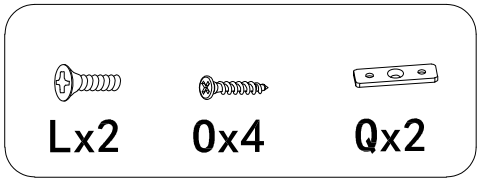

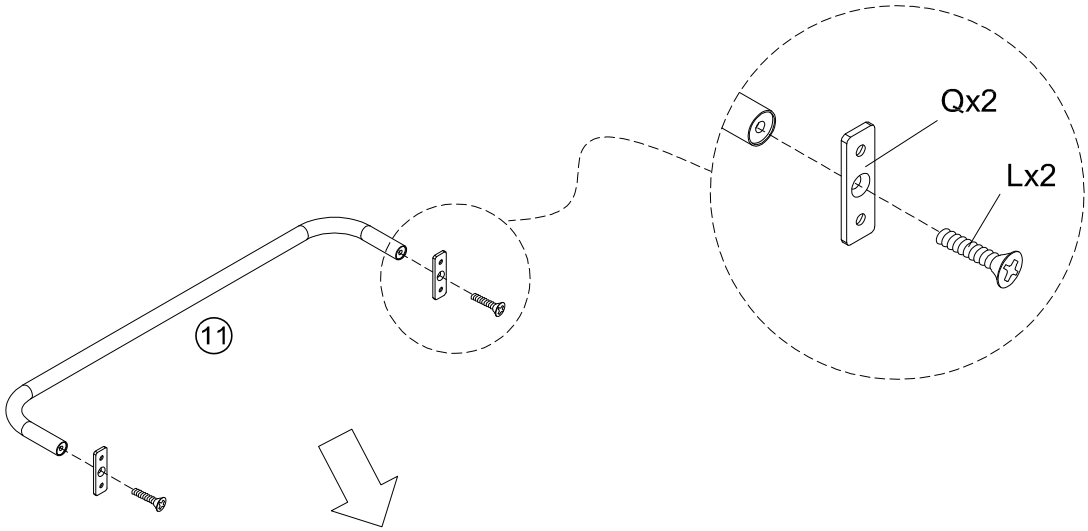

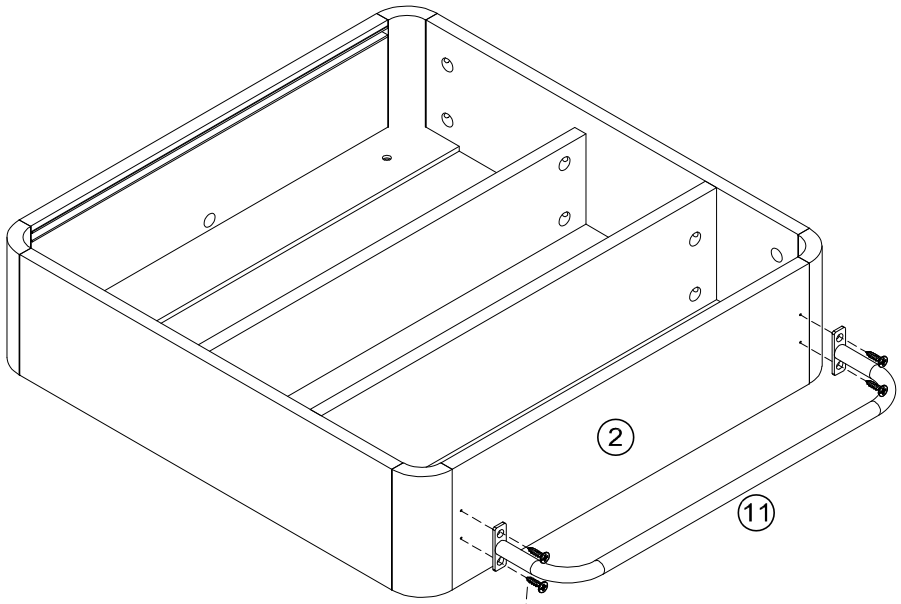

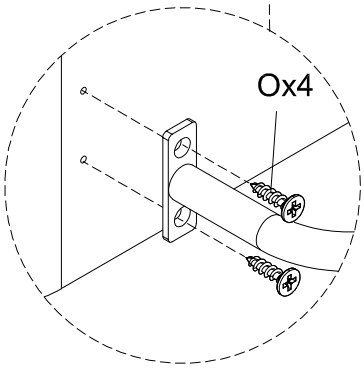

Warm tip: If you have limited space,
The towel rod is removable.

STEP 7

Please make sure hardware is suitable for your walls before installing, as different wall materials may require different types of anchors.

An assistance is required with this step.

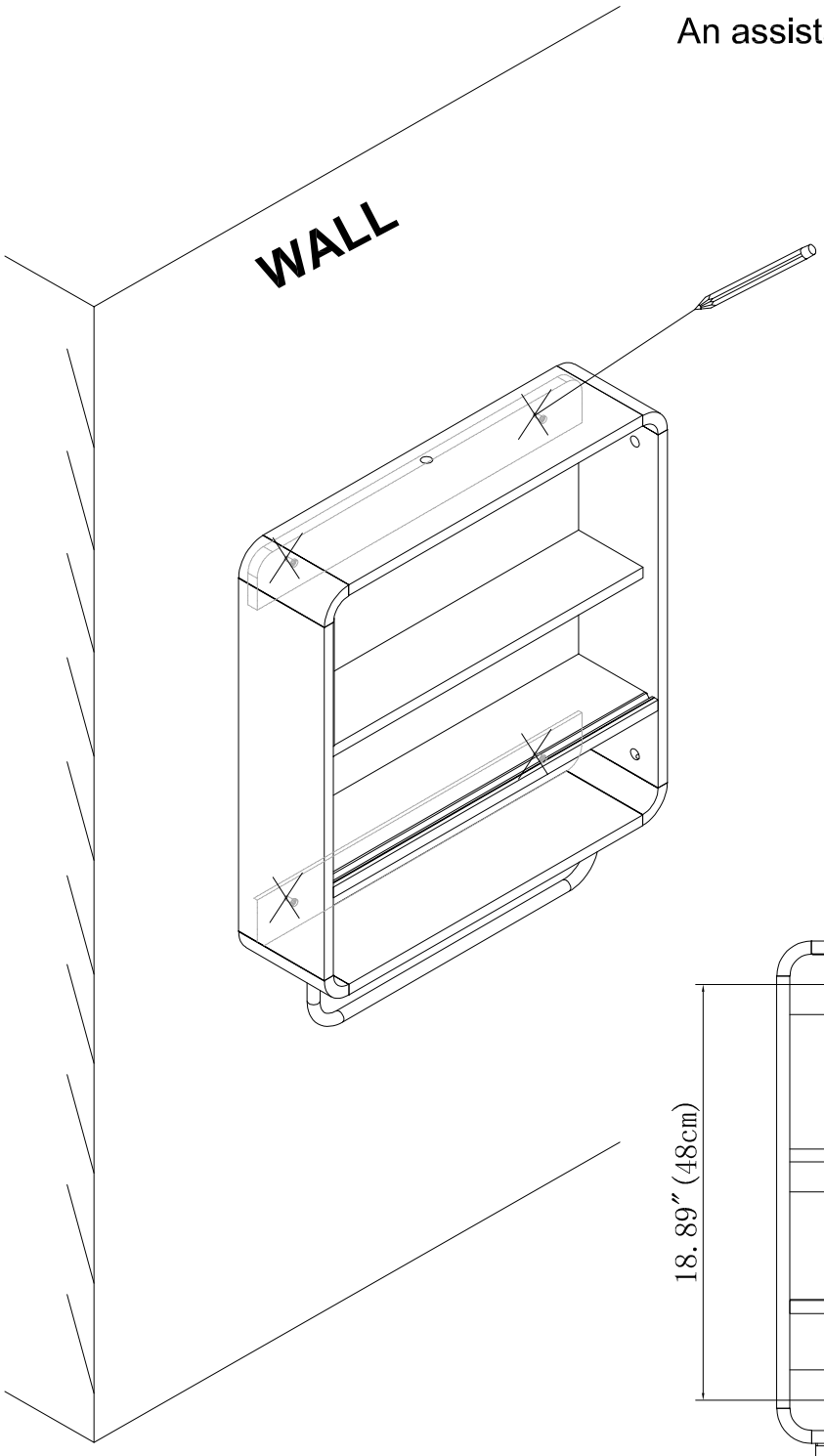

Mark the drill position on the wall with a pencil.

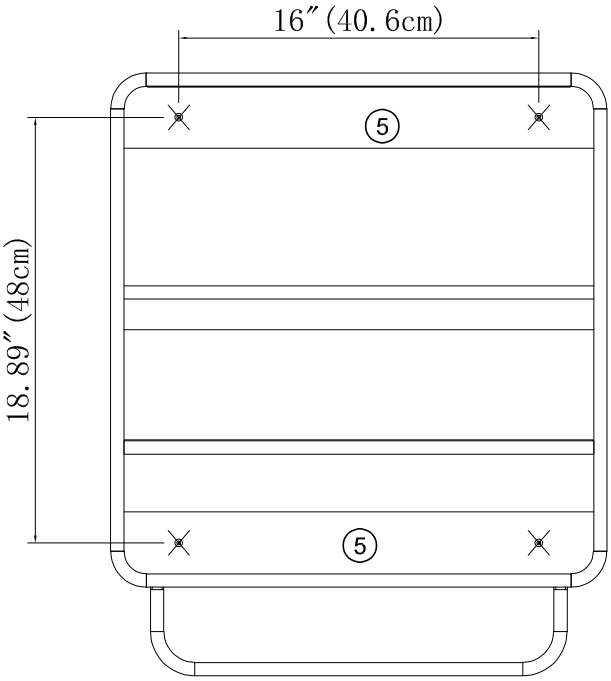

STEP 8



Hx4

Drill holes on the marked position using a bit, and then gently insert the wall anchor (H) into the drilled hole with the help of a hammer.

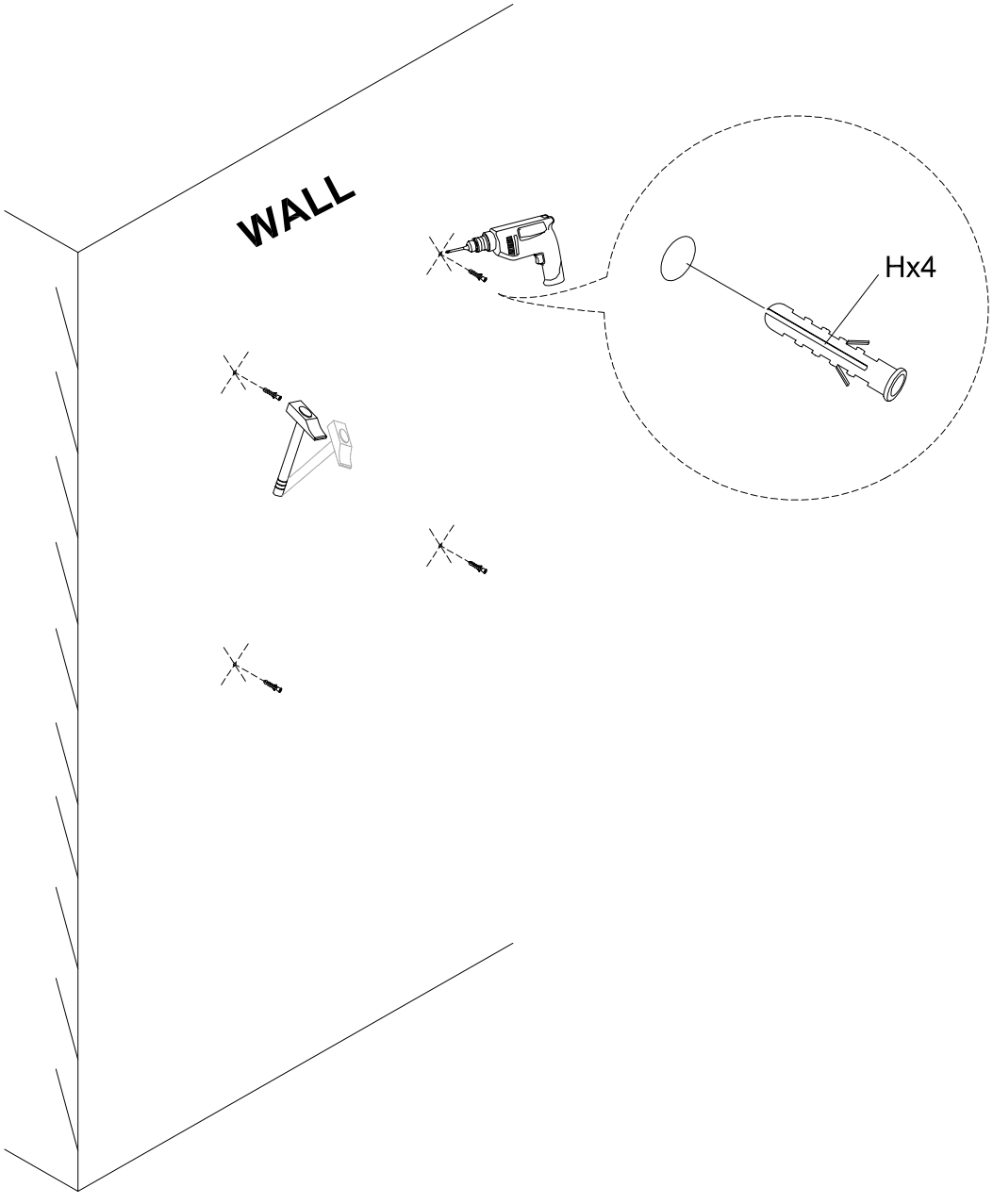

STEP 9

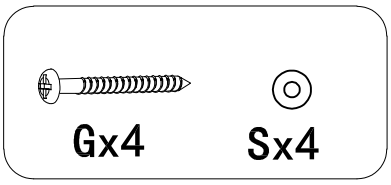

An assistance is required with this step.

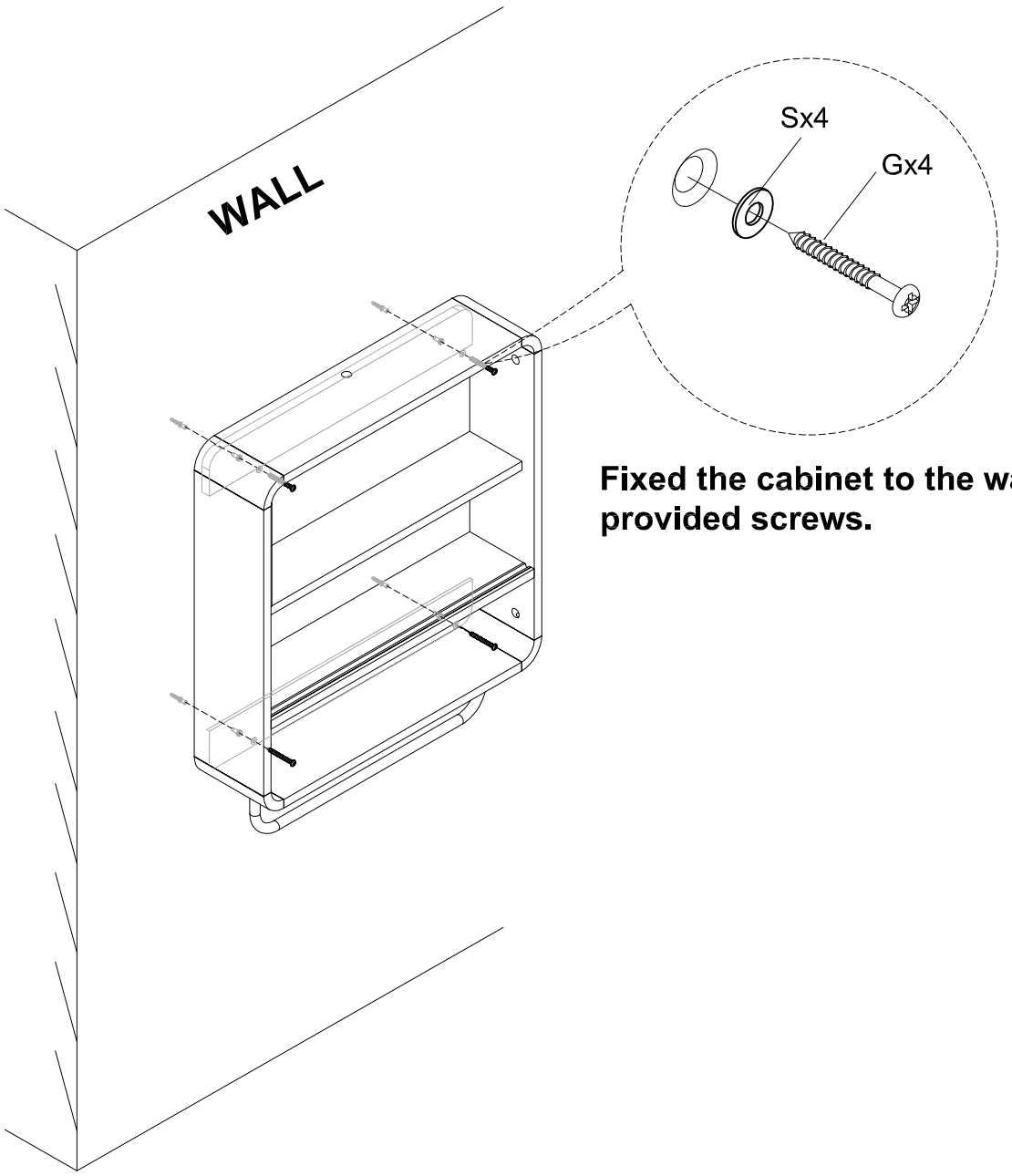

Fixed the cabinet to the wall with provided screws.

STEP 10

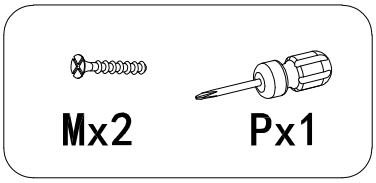

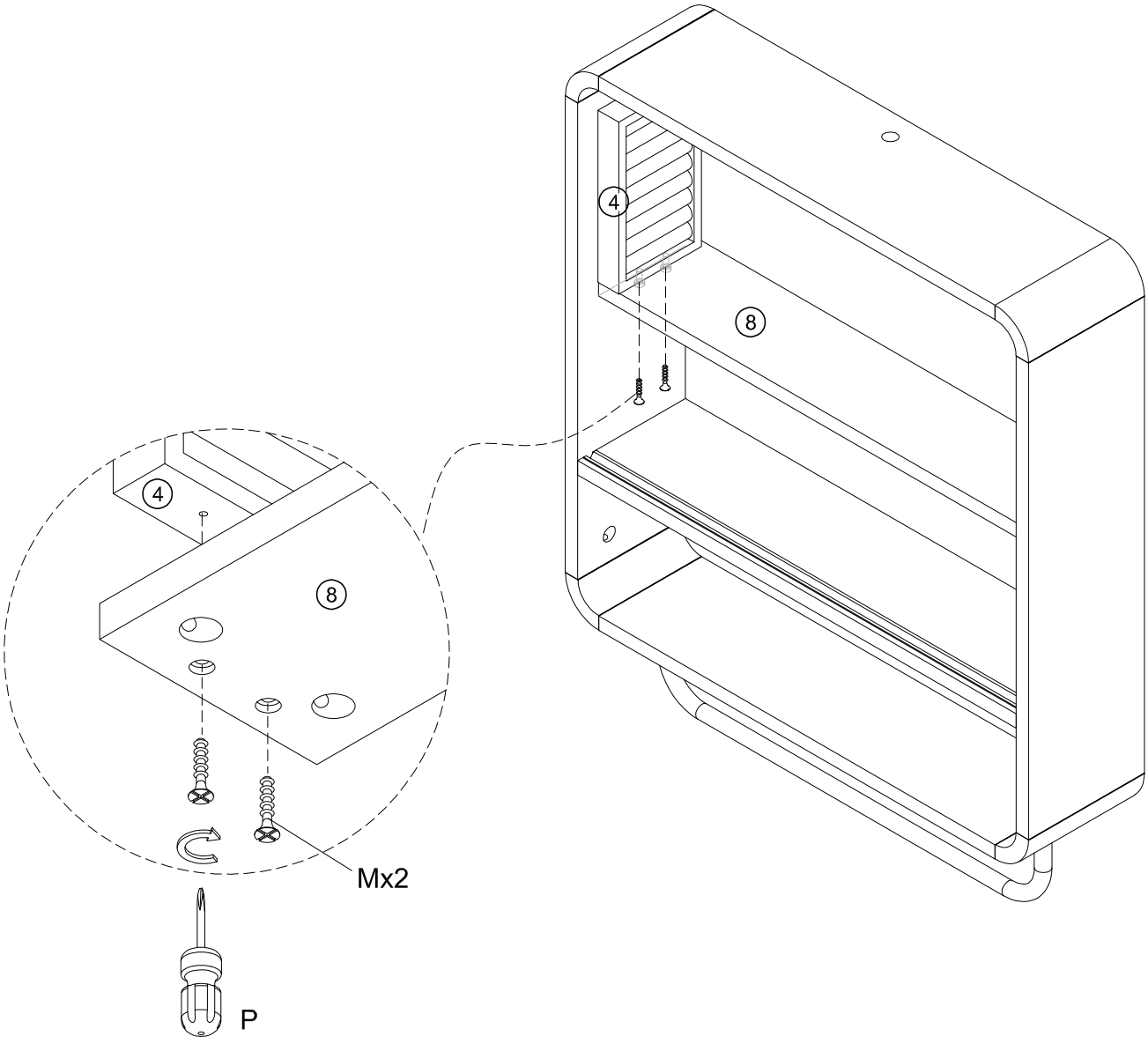

STEP 11

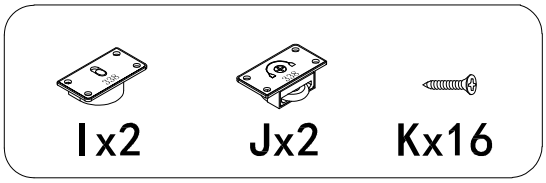
Ix2
Jx2
Kx16

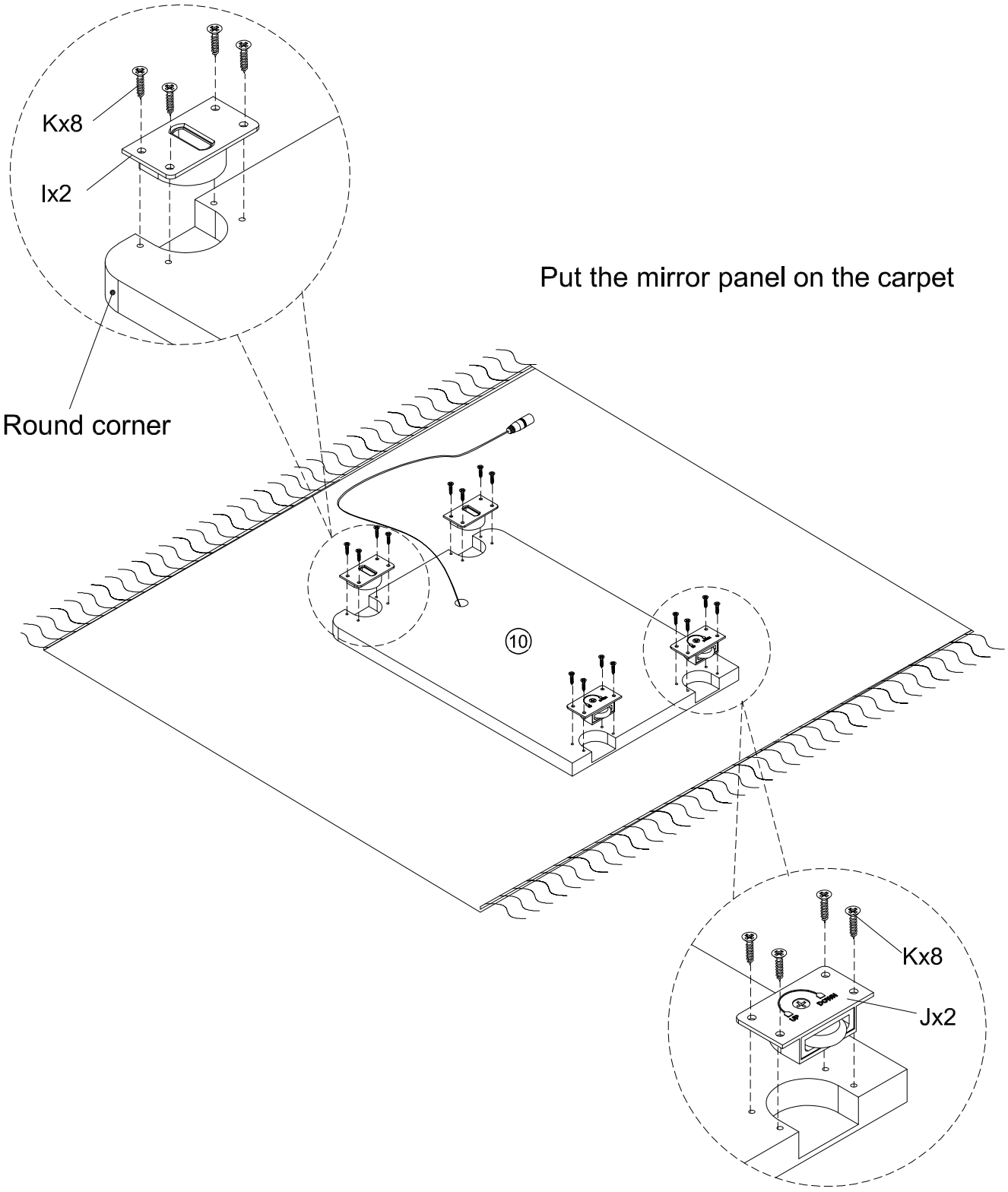
Kx8
Ix2
Round corner
Put the mirror panel on the carpet
⑩
Kx8
Jx2

STEP 12

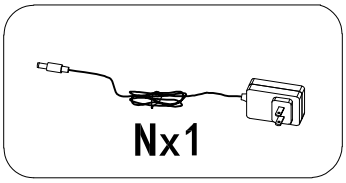

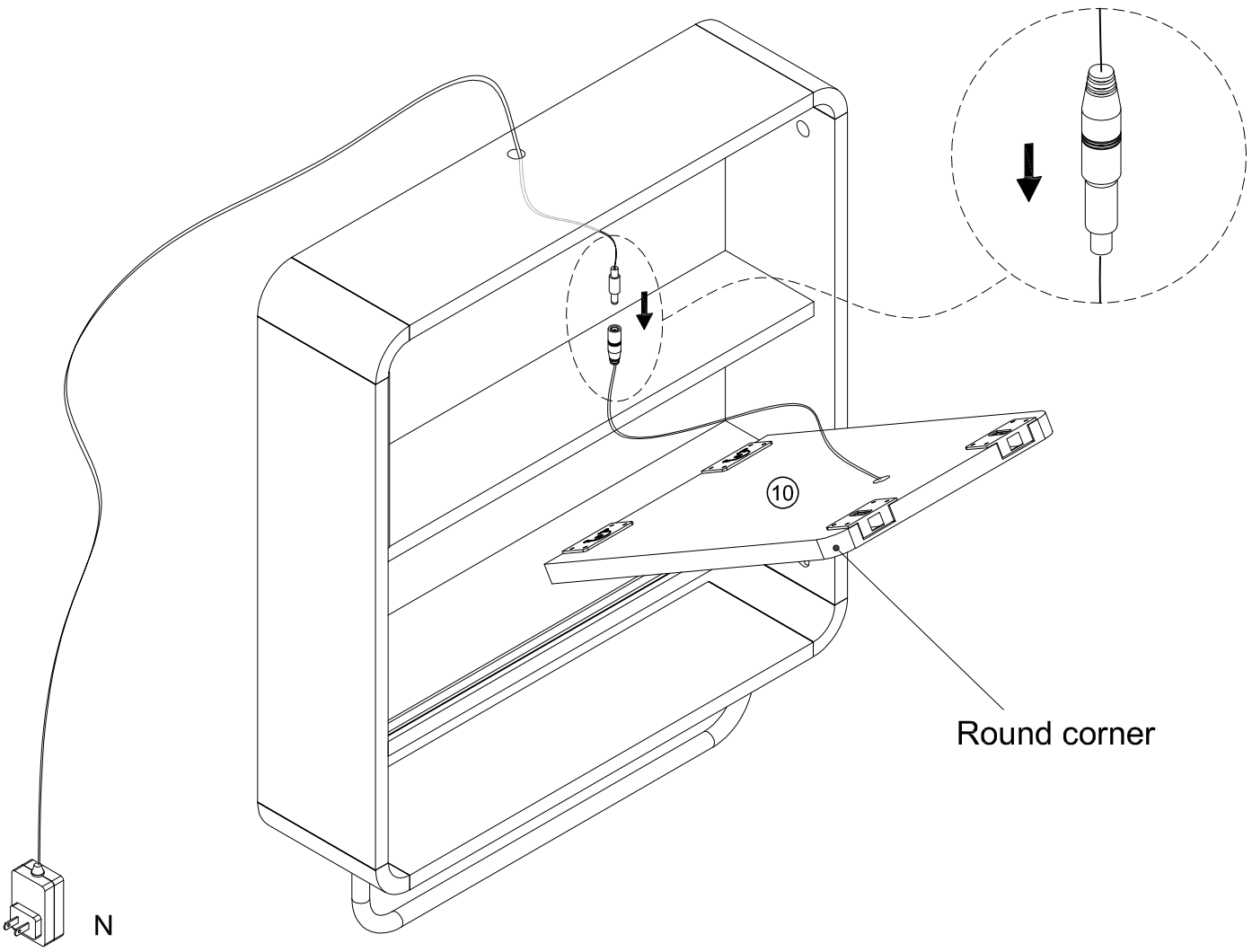

Power adapter

STEP 13

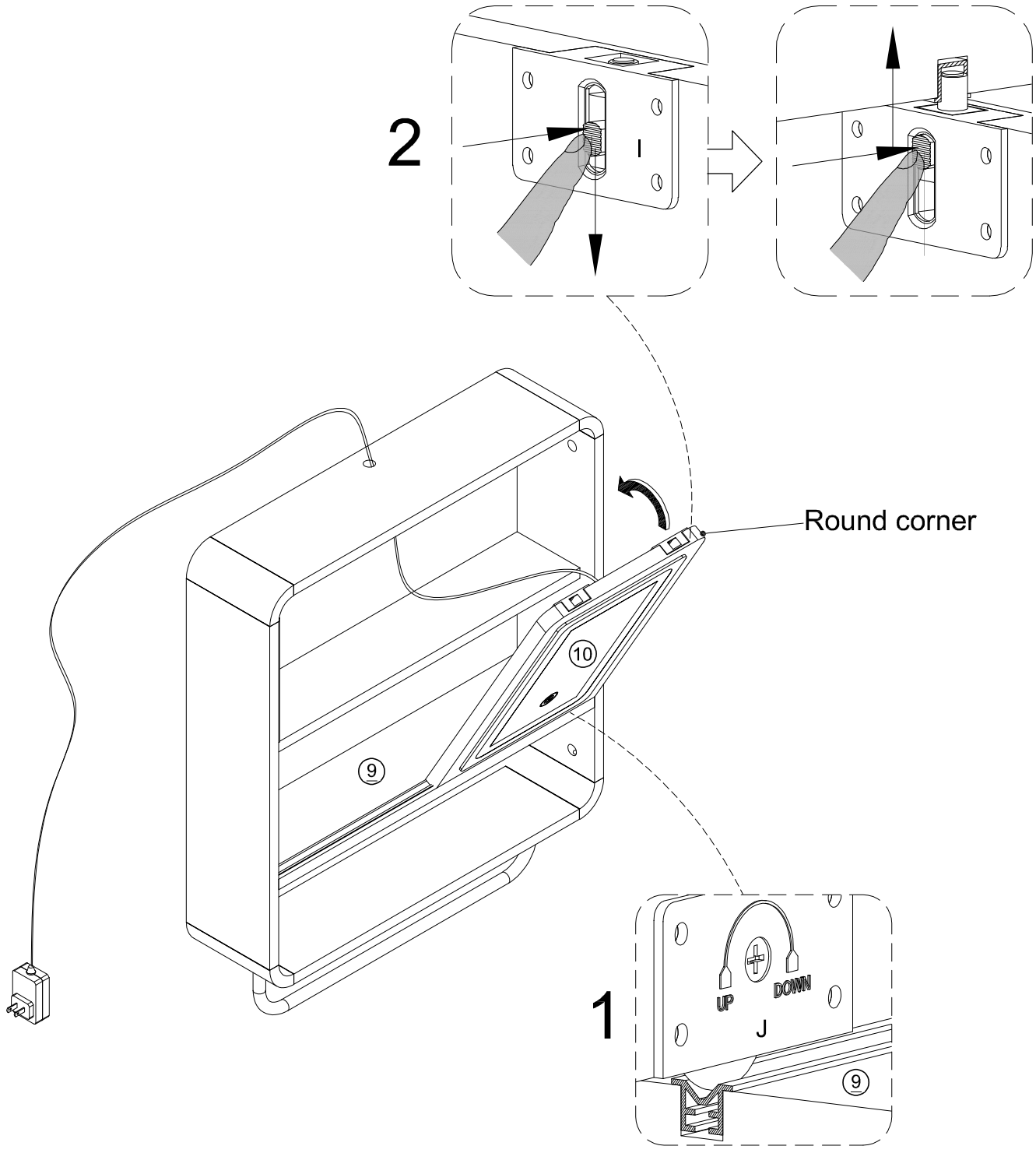

STEP 14

Cx24 Rx4

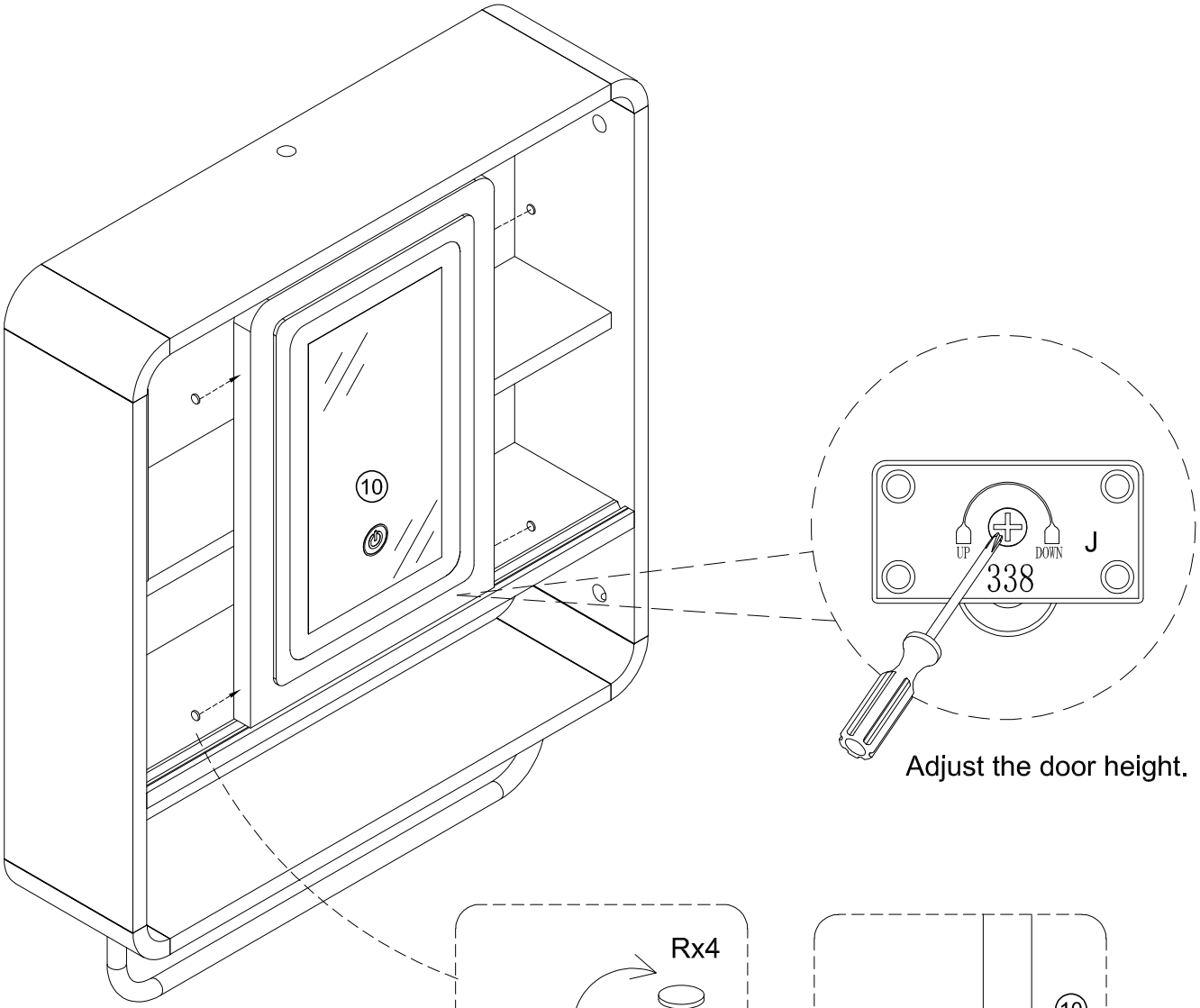

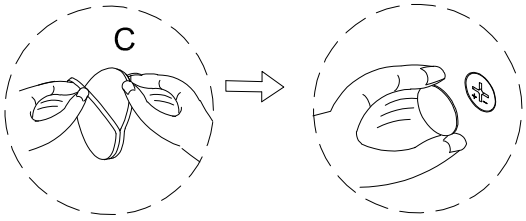

· Stick stickers (C) on cam locks (B) .

Final Assembly