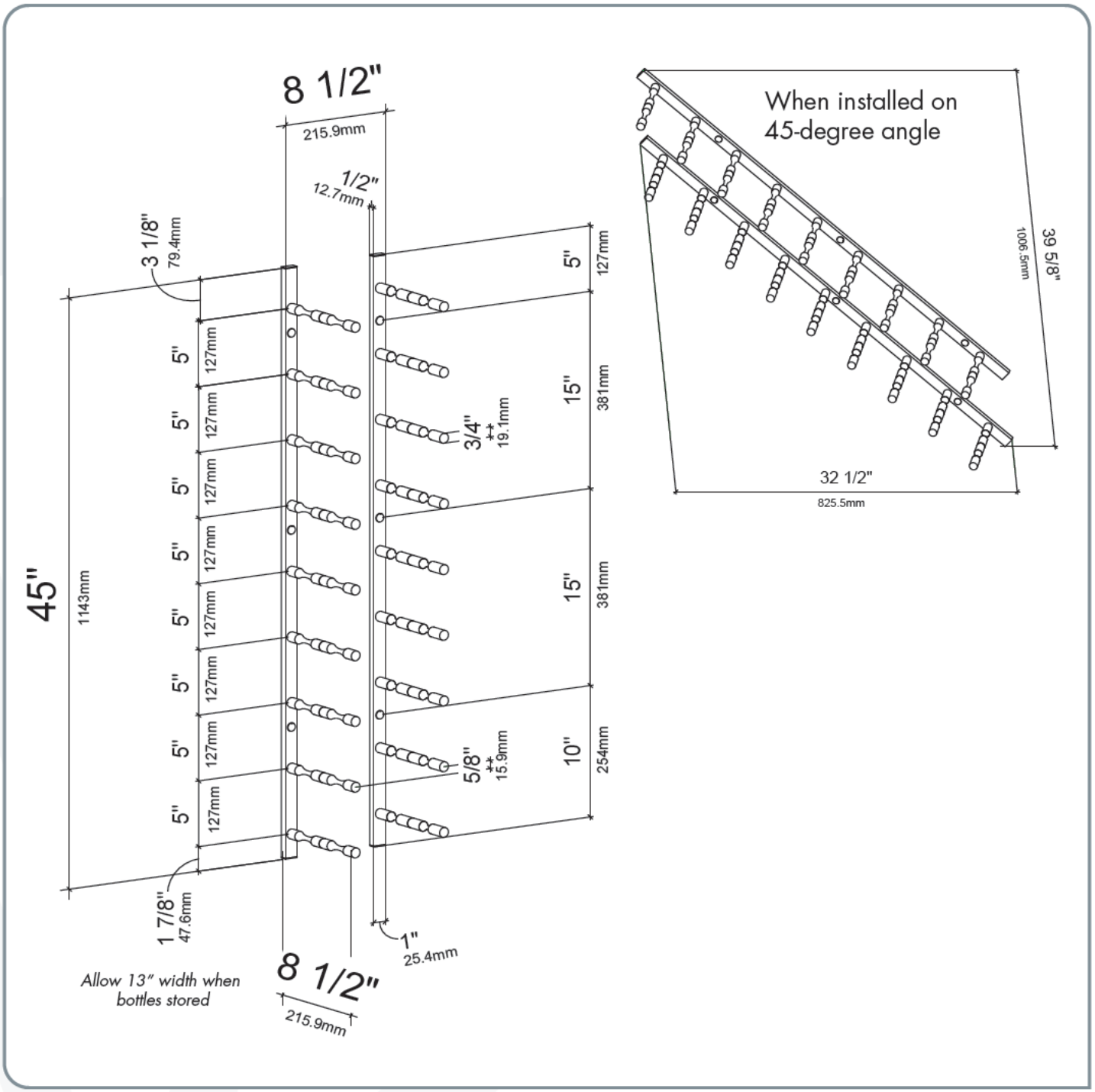
8 1/2"
215.9mm
1/2"
12.7mm
3 1/8"
79.4mm
45"
1143mm
5"
127mm
15"
381mm
10"
254mm
3/4"
19.1mm
5/8"
15.9mm
1 7/8"
47.6mm
1"
25.4mm
Allow 13" width when bottles stored
8 1/2"
215.9mm
When installed on 45-degree angle
39 5/8"
1006.5mm
32 1/2"
825.5mm