Instruction instructions

SKU: B042TT

metal loft bed 190X99 cm

Our product is packaged in two separate boxes.please read the installation instructions carefully before assembly.

Part list

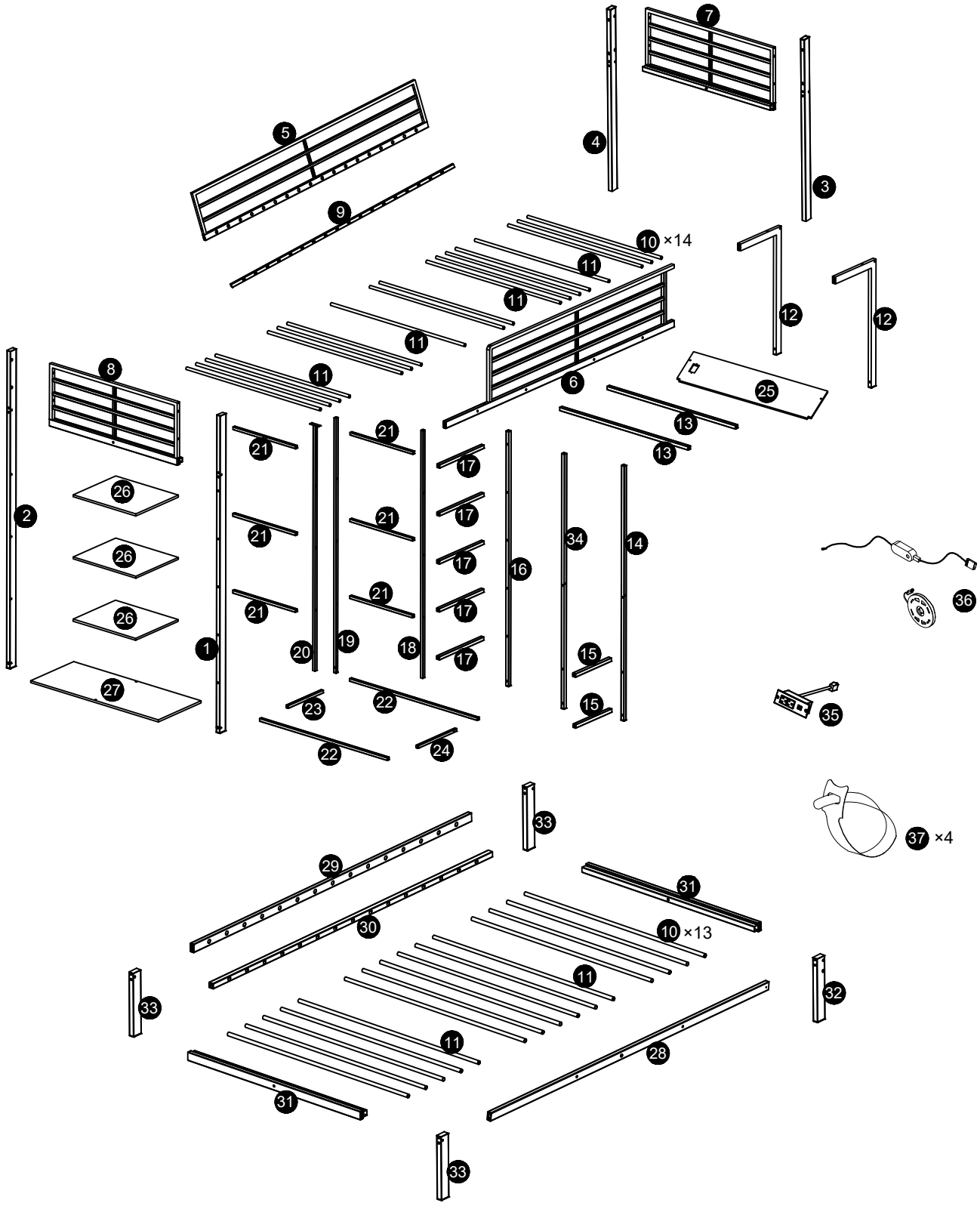

7
5
4
3
9
10 ×14
11
11
12
12
11
8
11
6
25
13
13
21
21
17
26
2
21
17
21
34
14
26
17
16
21
17
36
26
21
17
1
20
19
18
17
15
27
23
22
15
35
22
24
33
37 ×4
29
31
30
10 ×13
11
32
33
11
28
31
33

Part list-1

1 1PC	2 1PC	3 1PC
4 1PC 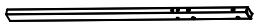	5 1PC	6 1PC 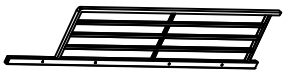
9 1PC	12 2PCS 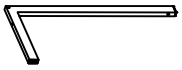	14 1PC
16 1PC	18 1PC	19 1PC
20 1PC	28 1PC	29 1PC
30 1PC	32 1PC 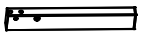	33 3PCS 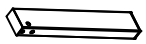
34 1PC	35 1PC 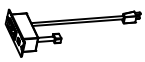	36 1PC 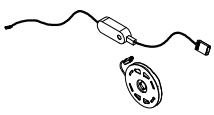
37 4PCS		

Part list-2

7 1PC	8 1PC	10 27PCS
11 6PCS	13 2PCS	15 2PCS
17 5PCS	21 6PCS	22 2PCS
23 1PC	24 1PC	25 1PC
26 3PCS 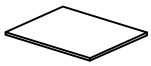	27 1PC	31 2PCS

Hardware list-2

A	M6*20mm	×19 +1	B	M6*25mm	×16 +1	C	M6*40mm	×46 +4
D	M6*60mm	×17 +1	E	M6*70mm	×24 +2	F	M6*28mm	×6 +1
G	M6*35mm	×1 +1	H		×2	I	4# Spanner	×1
J	M6*80	×2	K	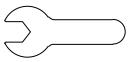 M6*80	×1	L		×3 +1
M	4# Spanner	×1	N	M3*10	×2 +1			

1

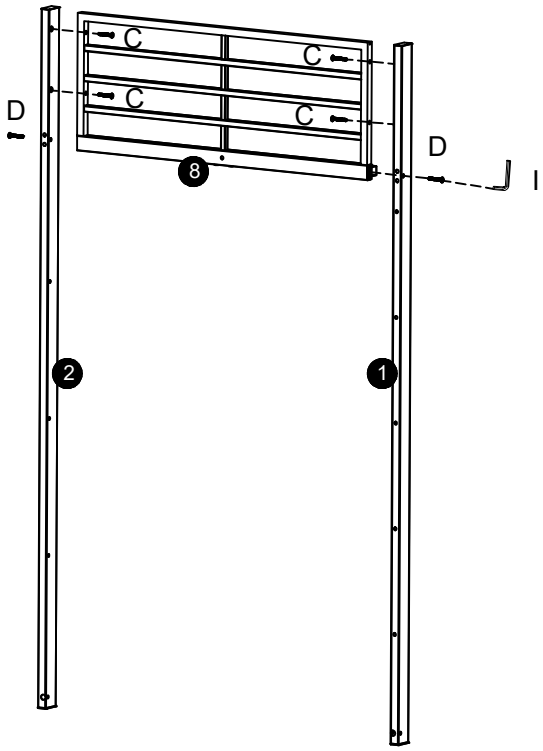

80%

When starting assembly,all screws should only be tightened to 80%.

D	▬	M6*60mm	2PCS
C	▬	M6*40mm	4PCS
I	⌐	4# Spanner	

2

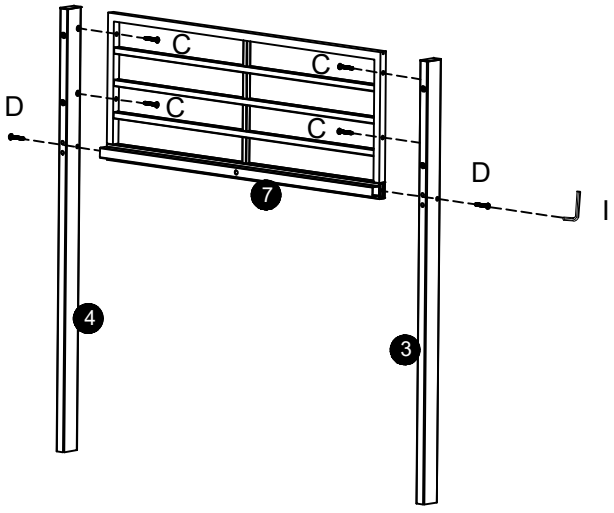

D	▬	M6*60mm	2PCS
C	▬	M6*40mm	4PCS
I	⌐	4# Spanner	

3

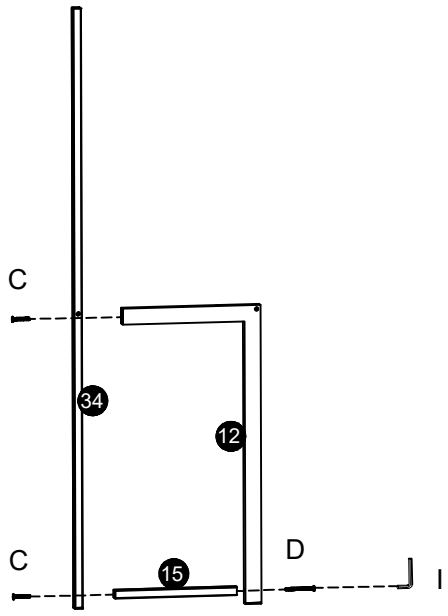

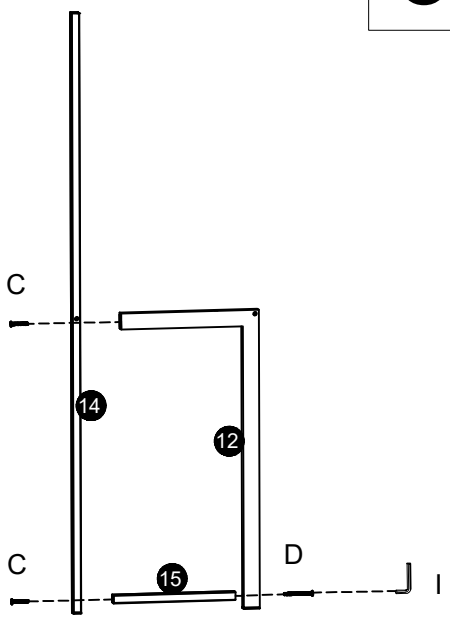

D	▬	M6*60mm	2PCS
C	▬	M6*40mm	4PCS
I	⌐	4# Spanner	

4

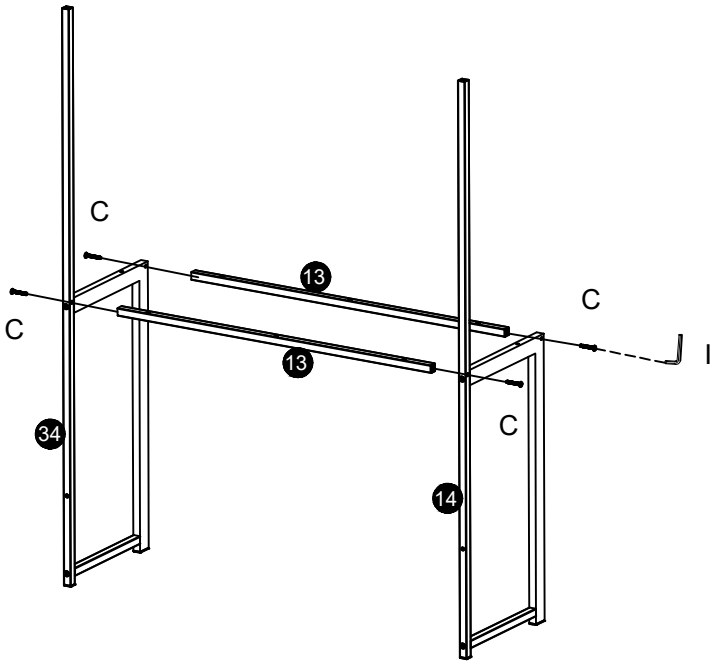

C	▬	M6*40mm	4PCS
I	⌐	4# Spanner	

5

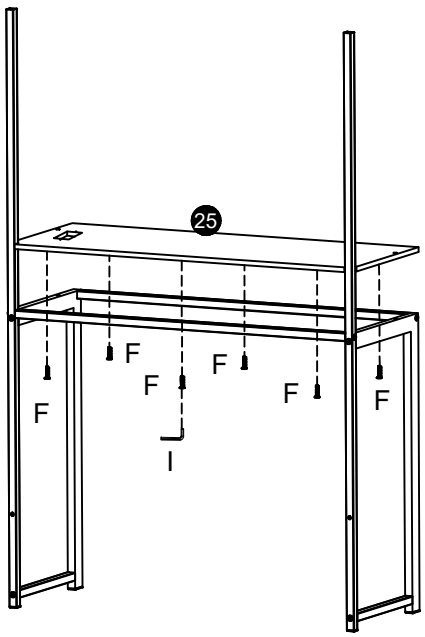

F		M6*28mm	6PCS
I		4# Spanner	

6

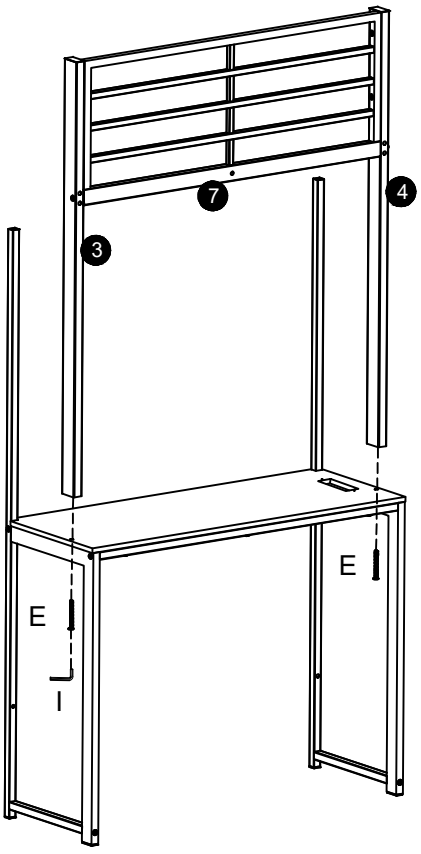

E		M6*70mm	2PCS
I		4# Spanner	

7

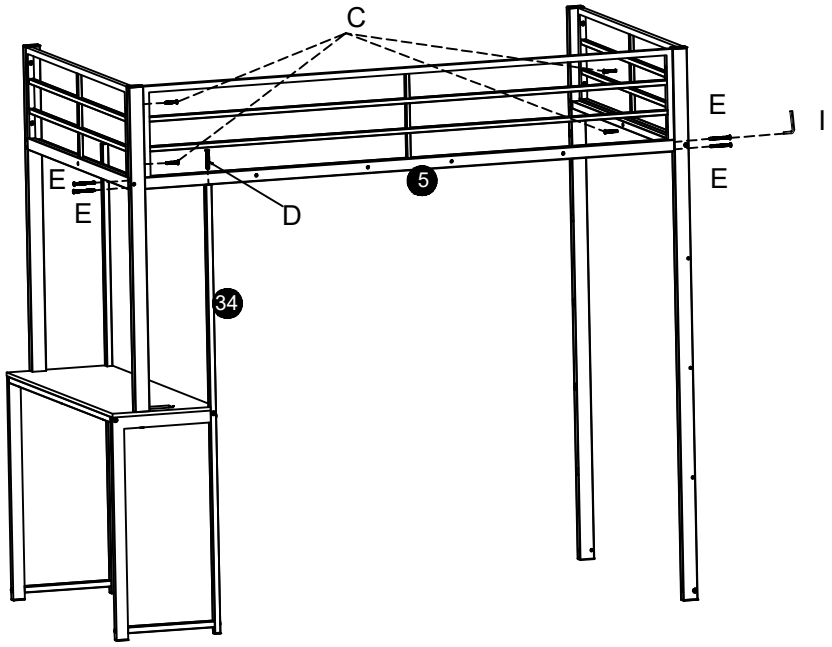

C	—	M6*40mm	4PCS
D	—	M6*60mm	1PC
E	—	M6*70mm	4PCS
I	⌐	4# Spanner	

8

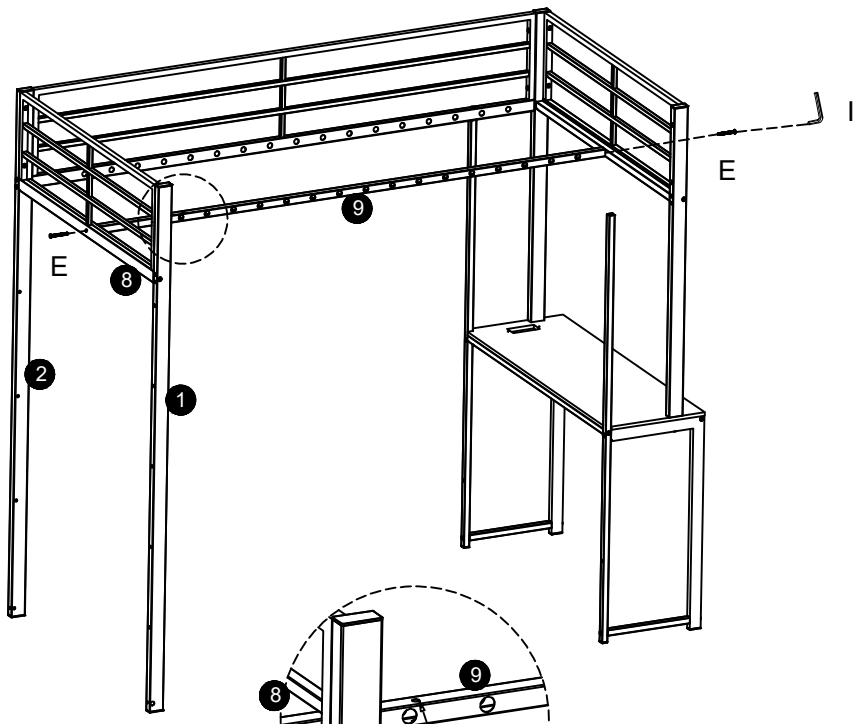

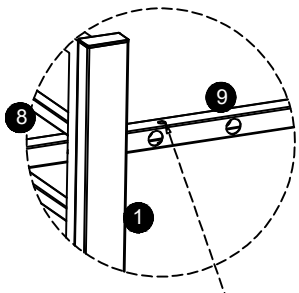

Assembly 9,note 8mm hole in the vertical direction.

E	—	M6*70mm	2PCS
I	⌐	4# Spanner	

9

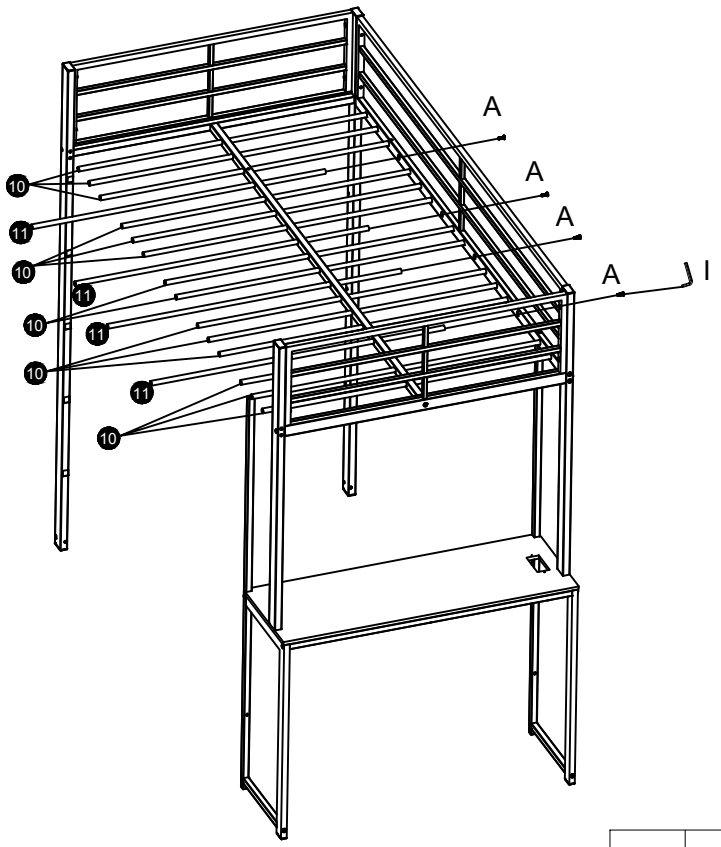

A		M6*20mm	4PCS
I		4# Spanner	

10

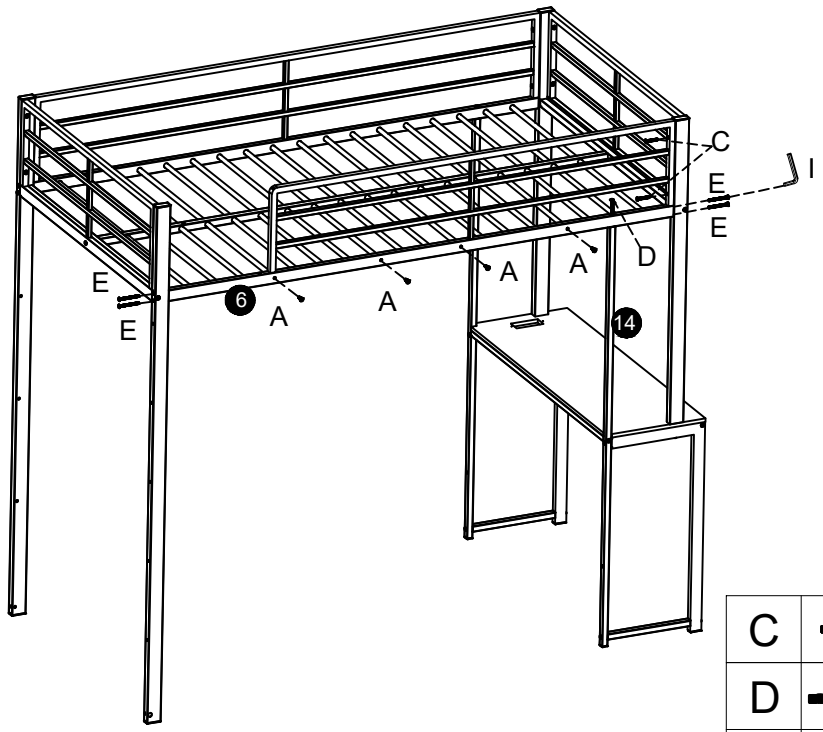

C		M6*40mm	2PCS
D		M6*60mm	1PC
E		M6*70mm	4PCS
A		M6*20mm	4PCS
I		4# Spanner	

11

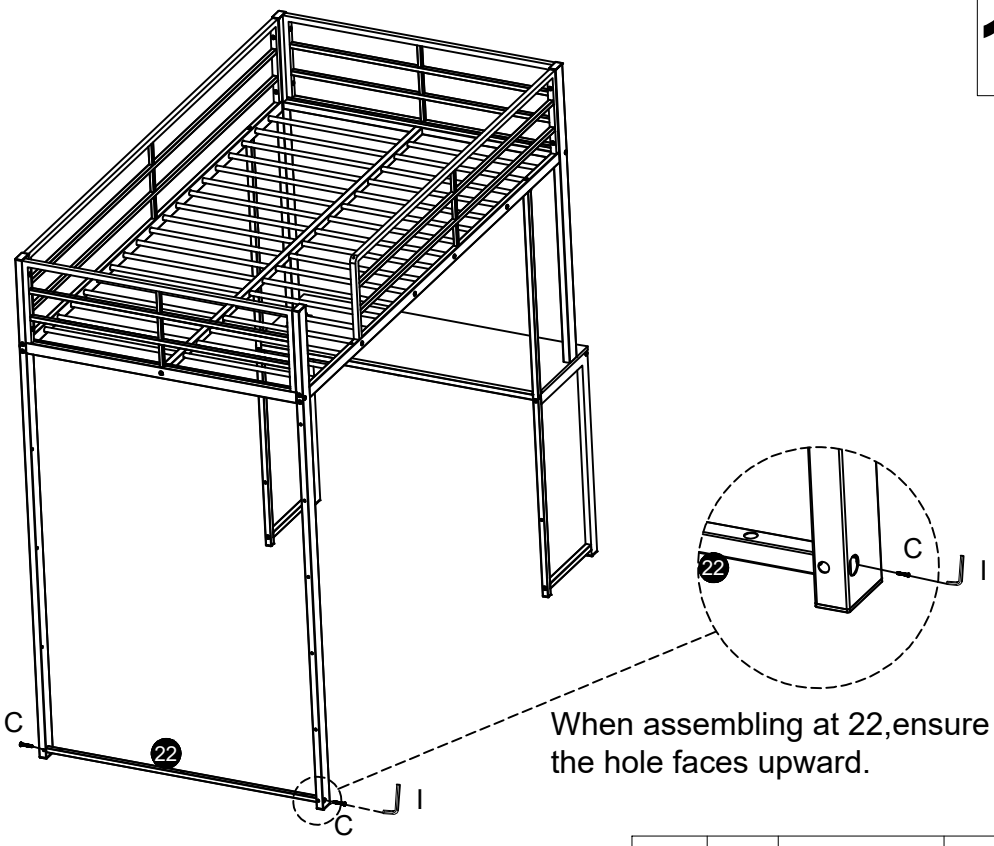

When assembling at 22,ensure the hole faces upward.

C	—	M6*40mm	2PCS
I	⌐	4# Spanner	

12

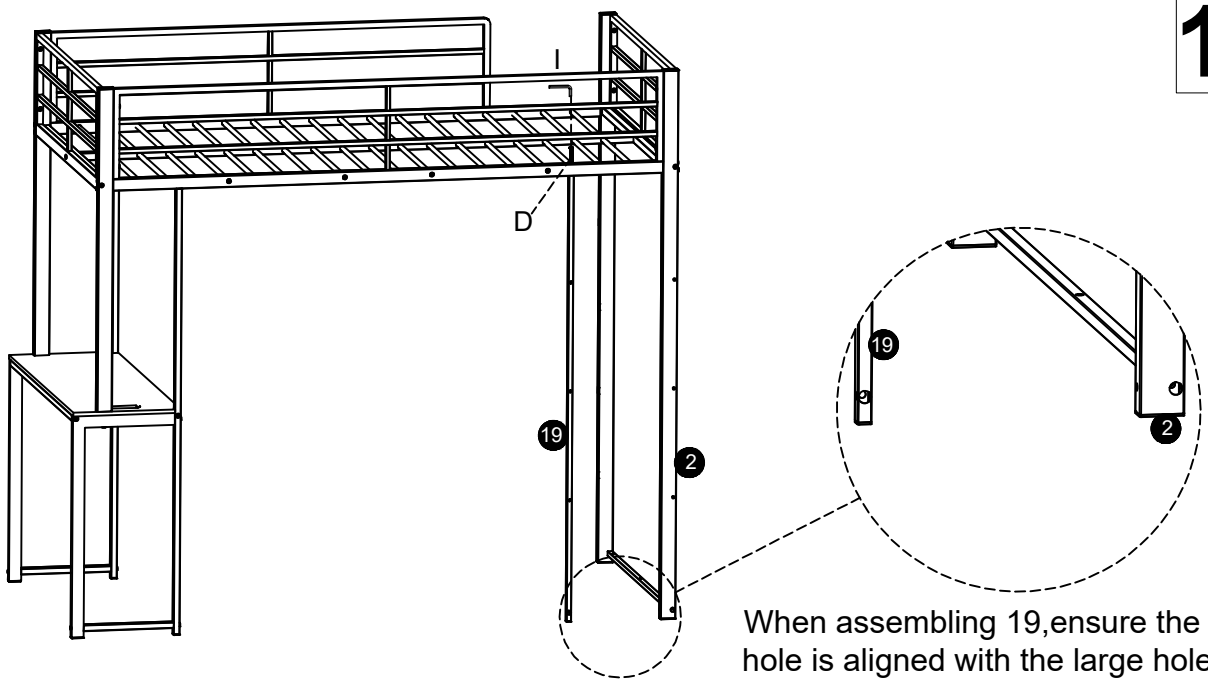

When assembling 19,ensure the large hole is aligned with the large hole of 2 in the same direction.

D	—	M6*60mm	1PC
I	⌐	4# Spanner	

13

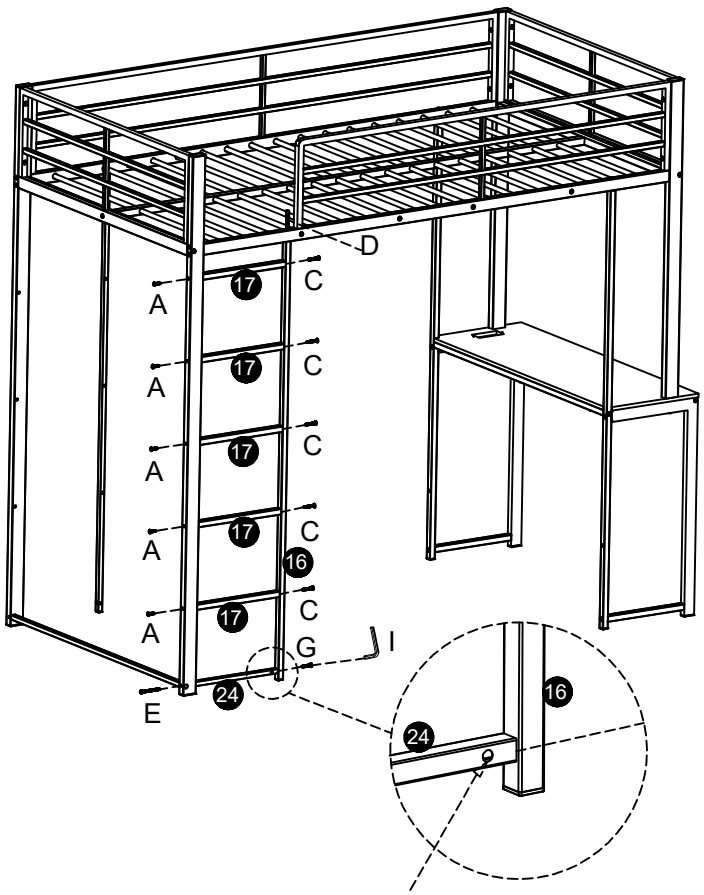

During assembling 24 and 16,ensure that 8mm rounnd hole of 24 is located here.

A		M6*20mm	5PCS
C		M6*40mm	5PCS
D		M6*60mm	1PC
E		M6*70mm	1PC
G		M6*35mm	1PC
I		4# Spanner	

14

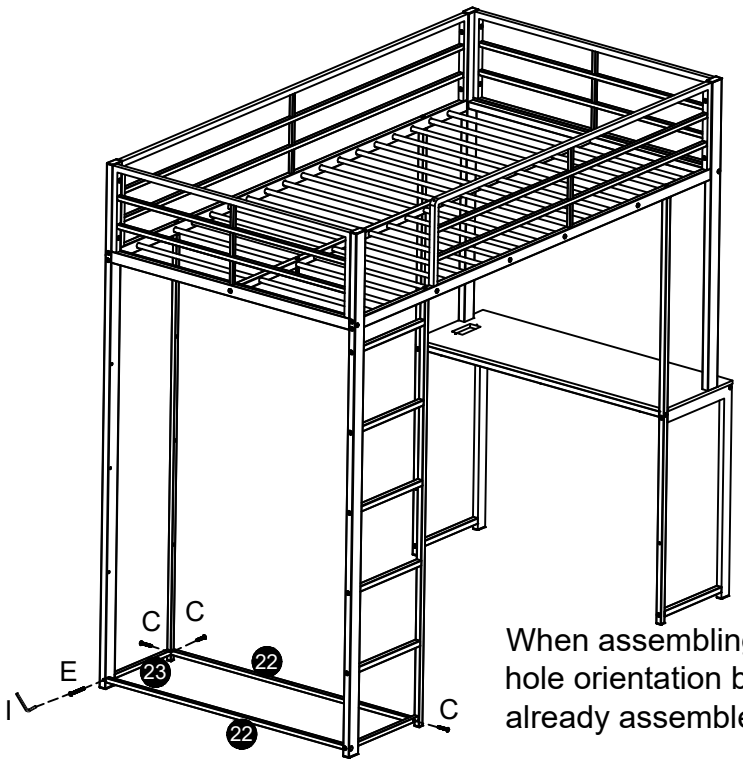

When assembling 22,pay attention to the hole orientation being the same as the already assembled 22.

Assemble 22 first,thenn assemble 23.

E		M6*70mm	1PC
C		M6*40mm	3PCS
I		4# Spanner	

15

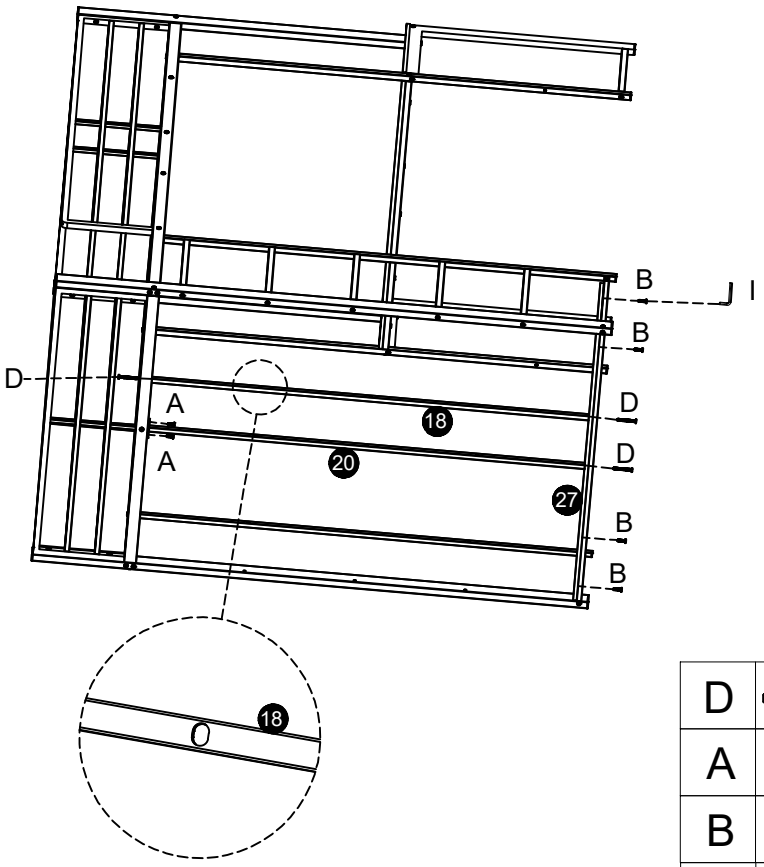

Pay attention to the oval hole here during assembly at 18 o'clock.

D		M6*60mm	3PCS
A		M6*20mm	2PCS
B		M6*25mm	4PCS
I		4# Spanner	

16

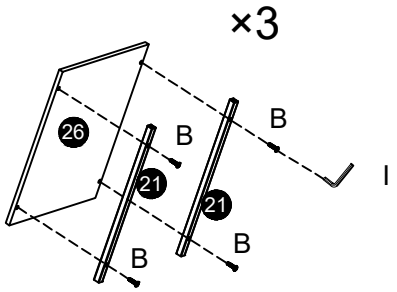

B		M6*25mm	12PCS
I		4# Spanner	

17

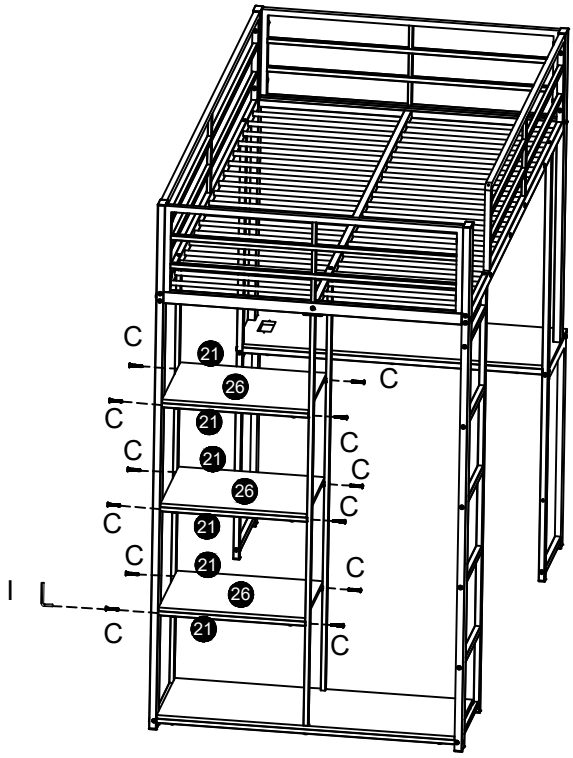

C	—	M6*40mm	12PCS
I	⌐	4# Spanner	

18

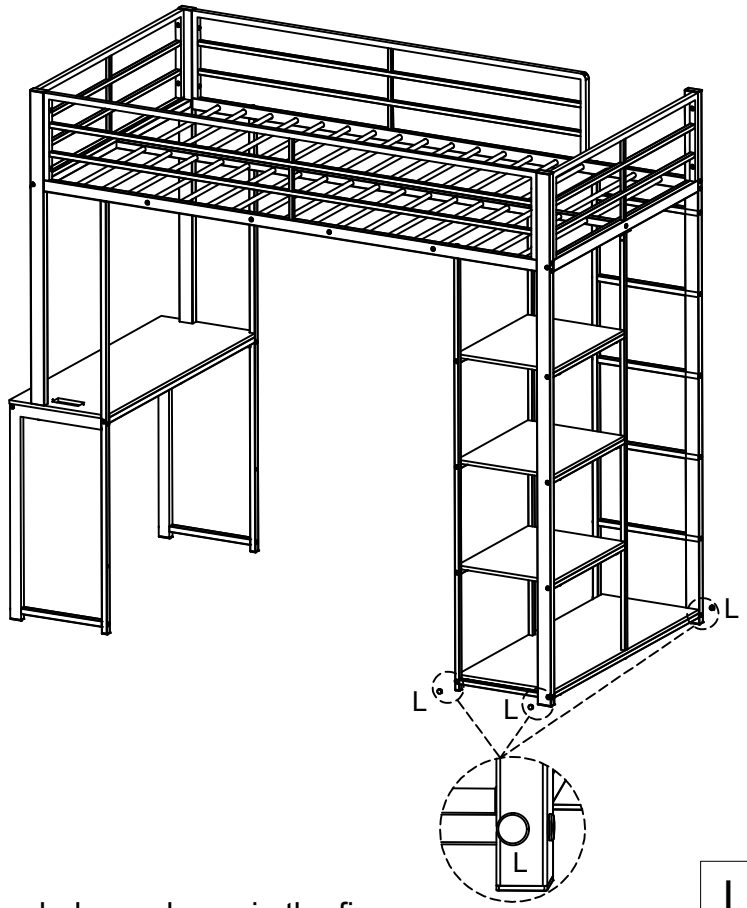

Insert L into the hole as shown in the figure.

L	⌀		3PCS

19

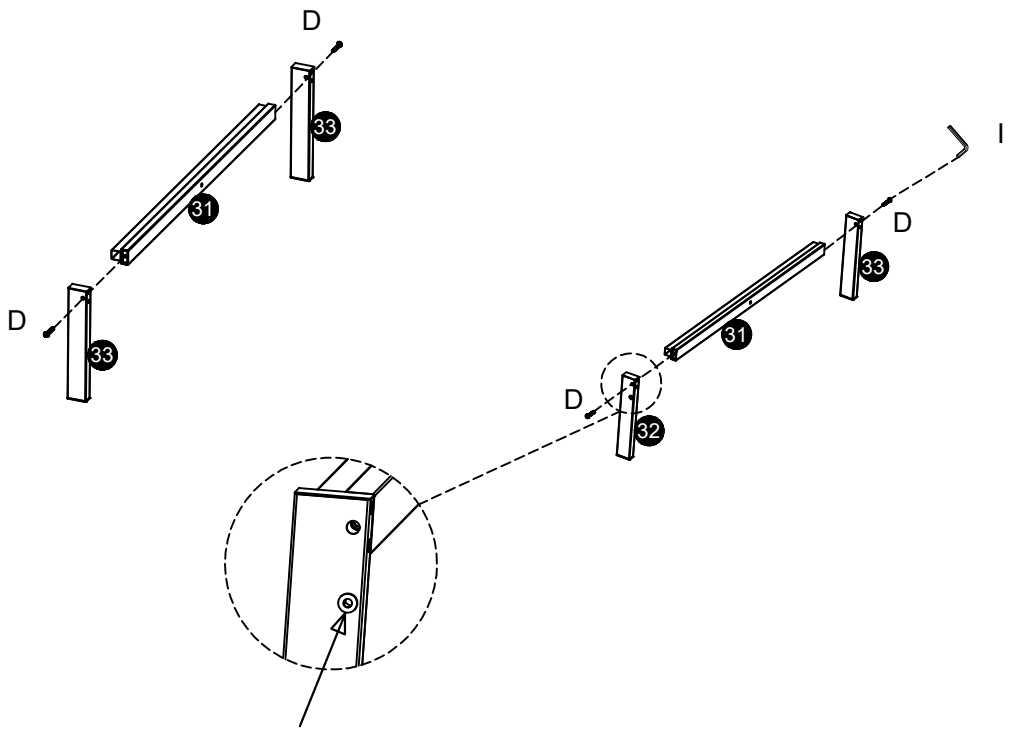

When assembbling 32,ensure the M6 rivet nut is on the outer side.

D		M6*60mm	4PCS
I	⌐	4# Spanner	

20

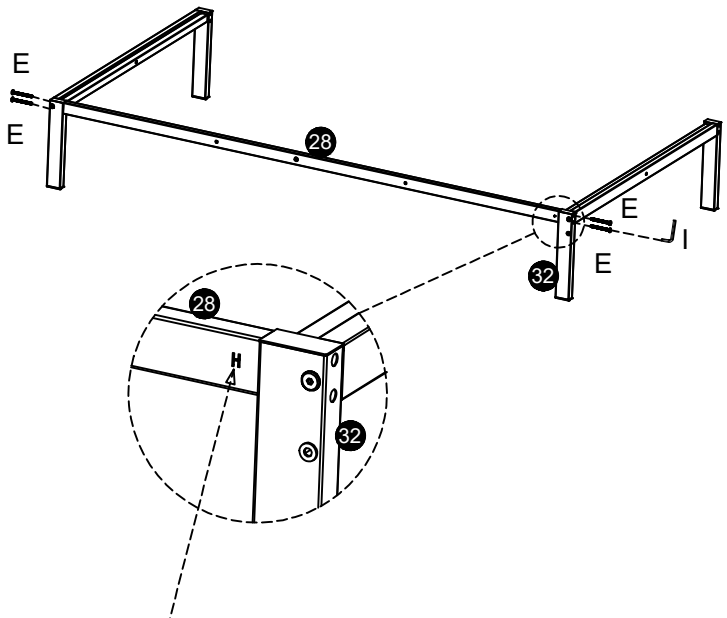

When assembling 28,ensure the end marked with an H ispositioned near 32.

E	▬	M6*70mm	4PCS
I	⌐	4# Spanner	

21

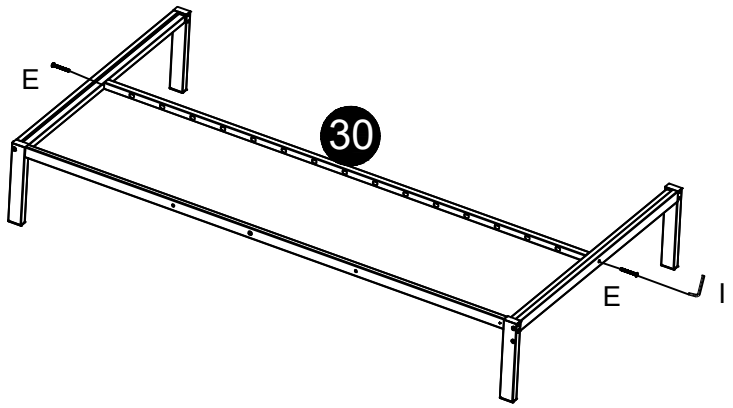

E	▬	M6*70mm	2PCS
I	⌐	4# Spanner	

22

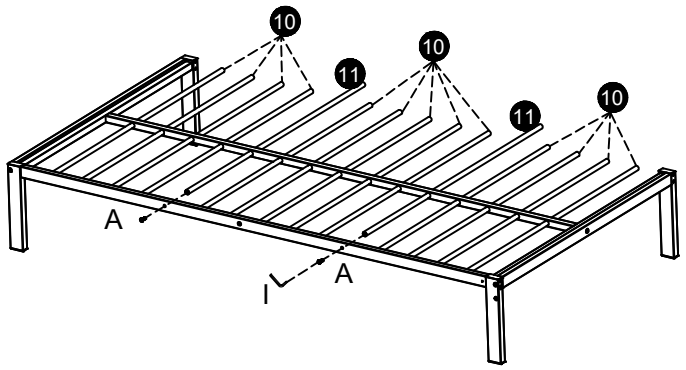

A	▬	M6*20mm	2PCS
I	⌐	4# Spanner	

23

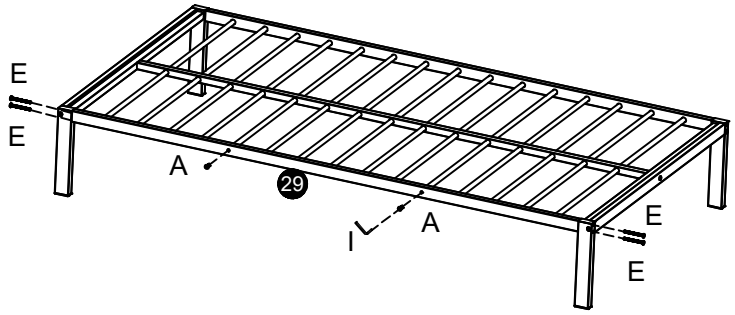

E	▬	M6*70mm	4PCS
A	▬	M6*20mm	2PCS
I	⌐	4# Spanner	

24

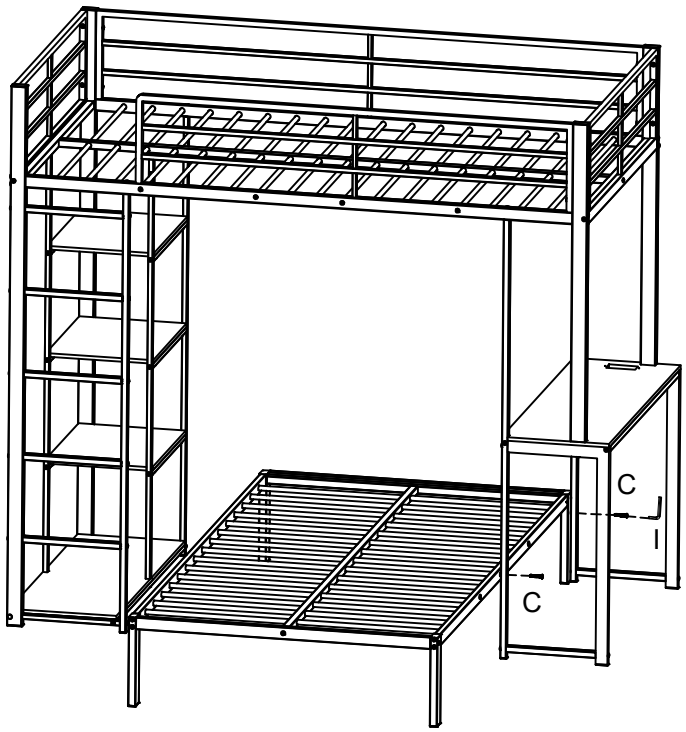

C	▬	M6*40mm	2PCS
I	⌐	4# Spanner	

25

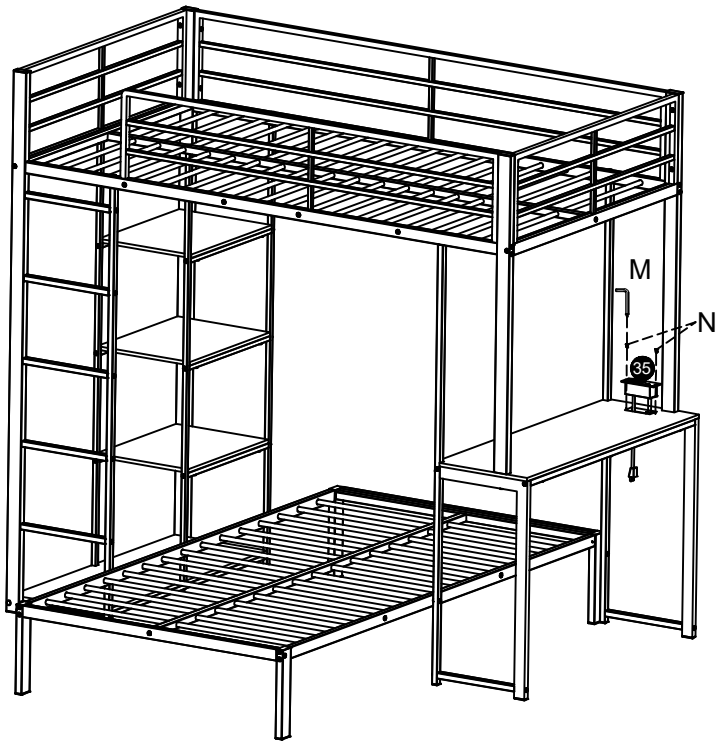

N		M3*10	2PCS
M		4# Spanner	

26

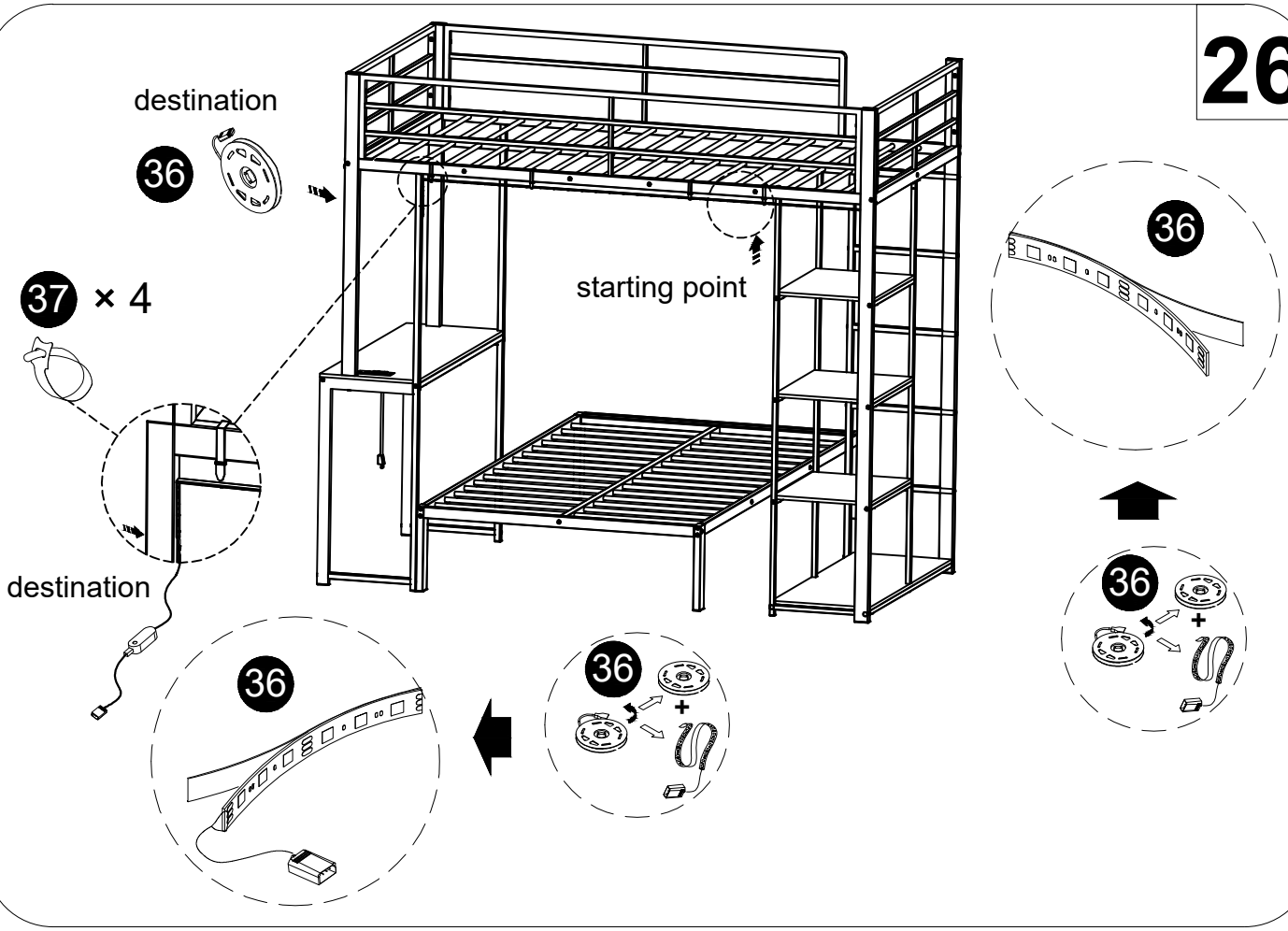

27

Unscrew E ,then pass E through H and tighten it.

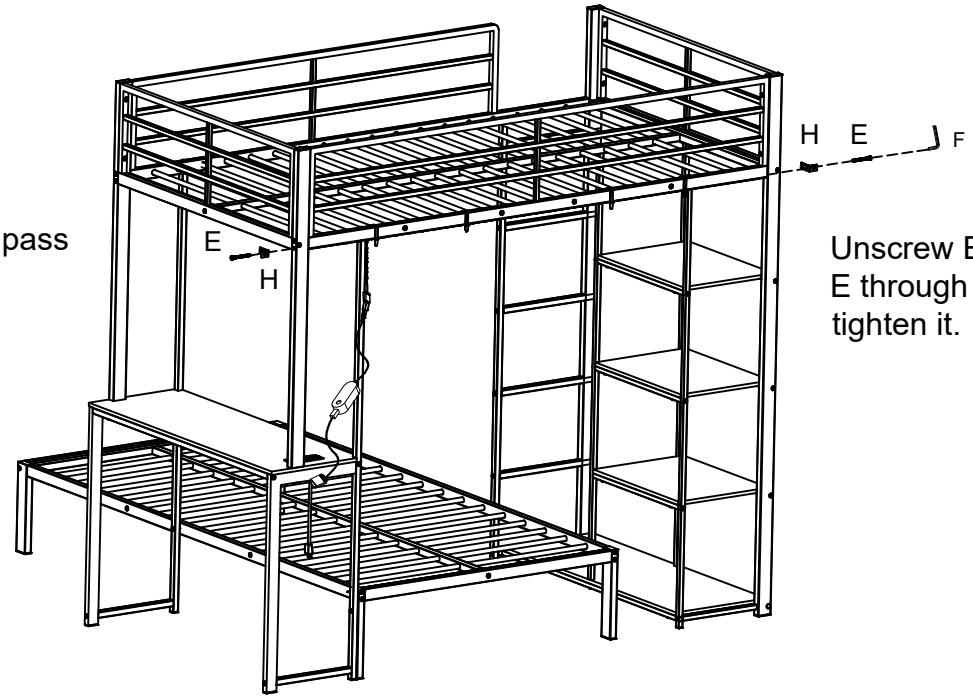

Unscrew E ,then pass E through H and tighten it.

H			2PCS
I		4# Spanner	

28

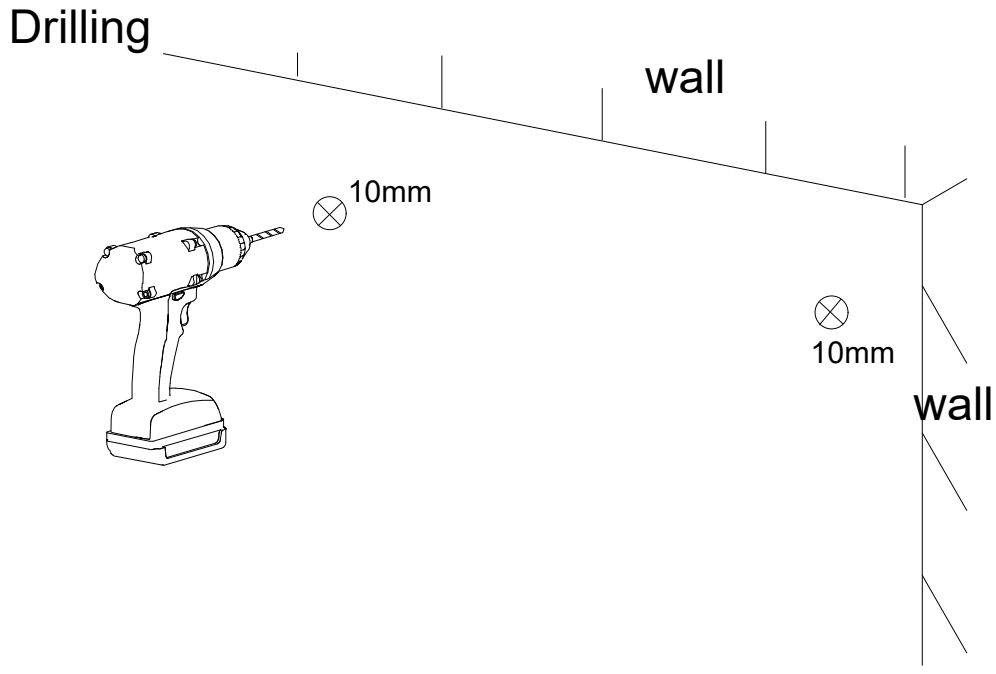

29

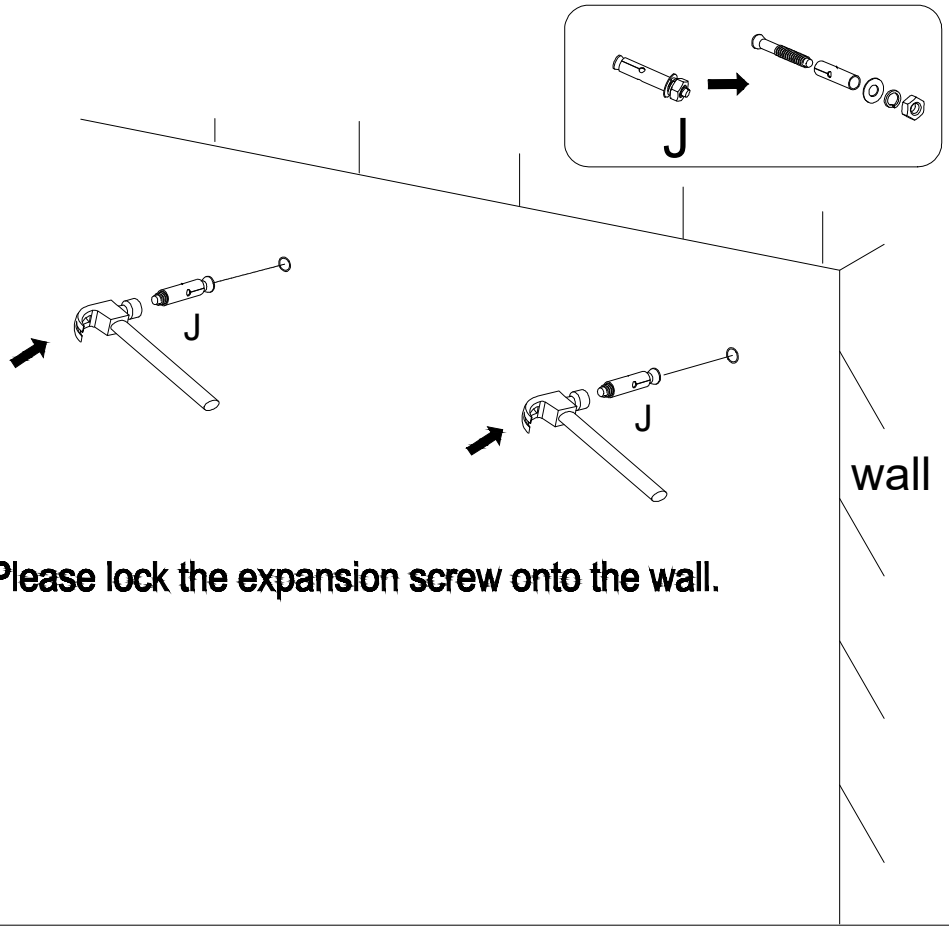

Please lock the expansion screw onto the wall.

30

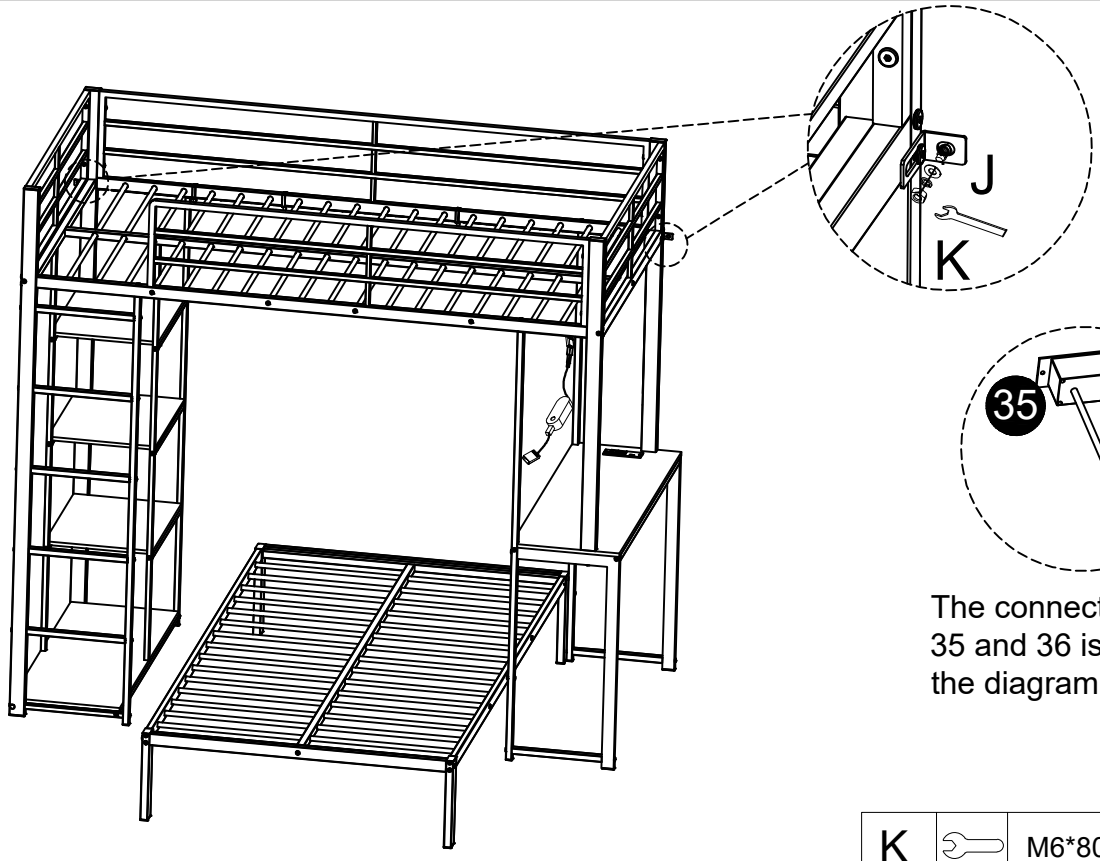

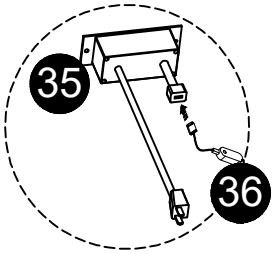

The connection between 35 and 36 is as shown in the diagram

Assembled, tighten allthe screws

K		M6*80mm	
J		M6*80mm	2PCS