Corner Bed

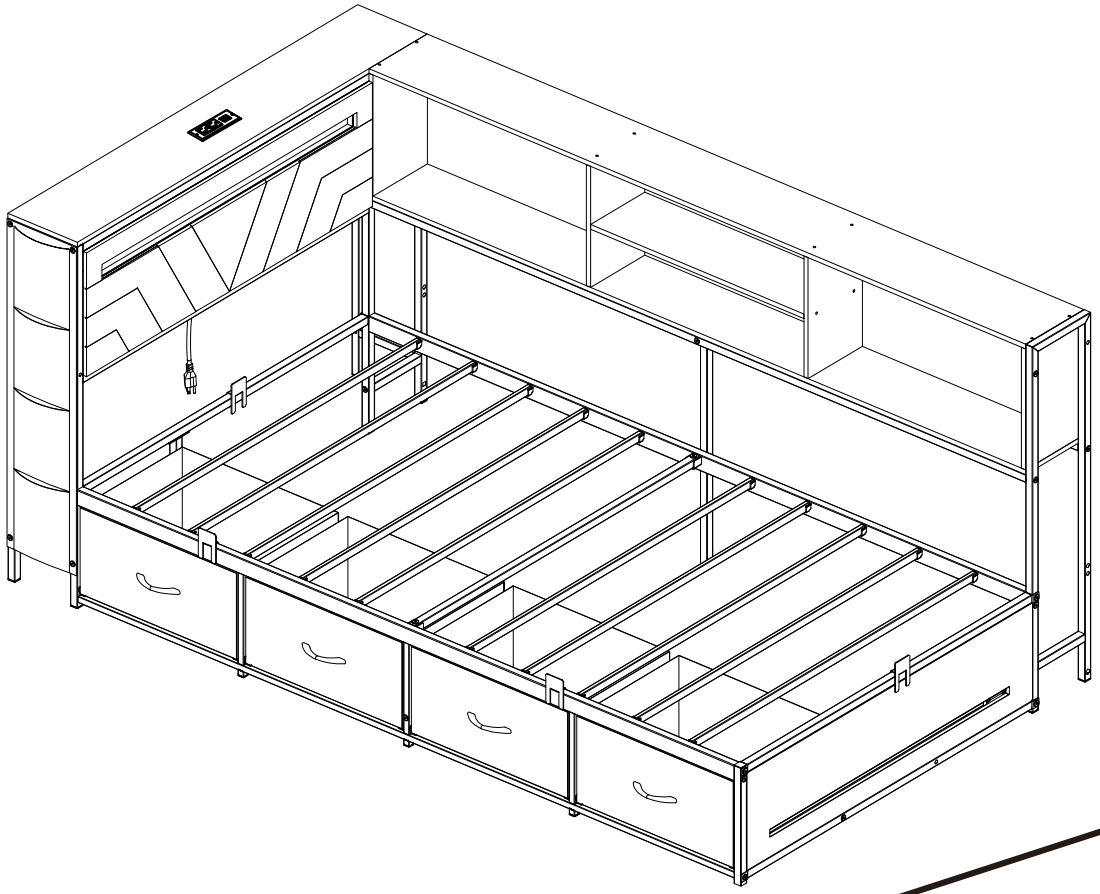

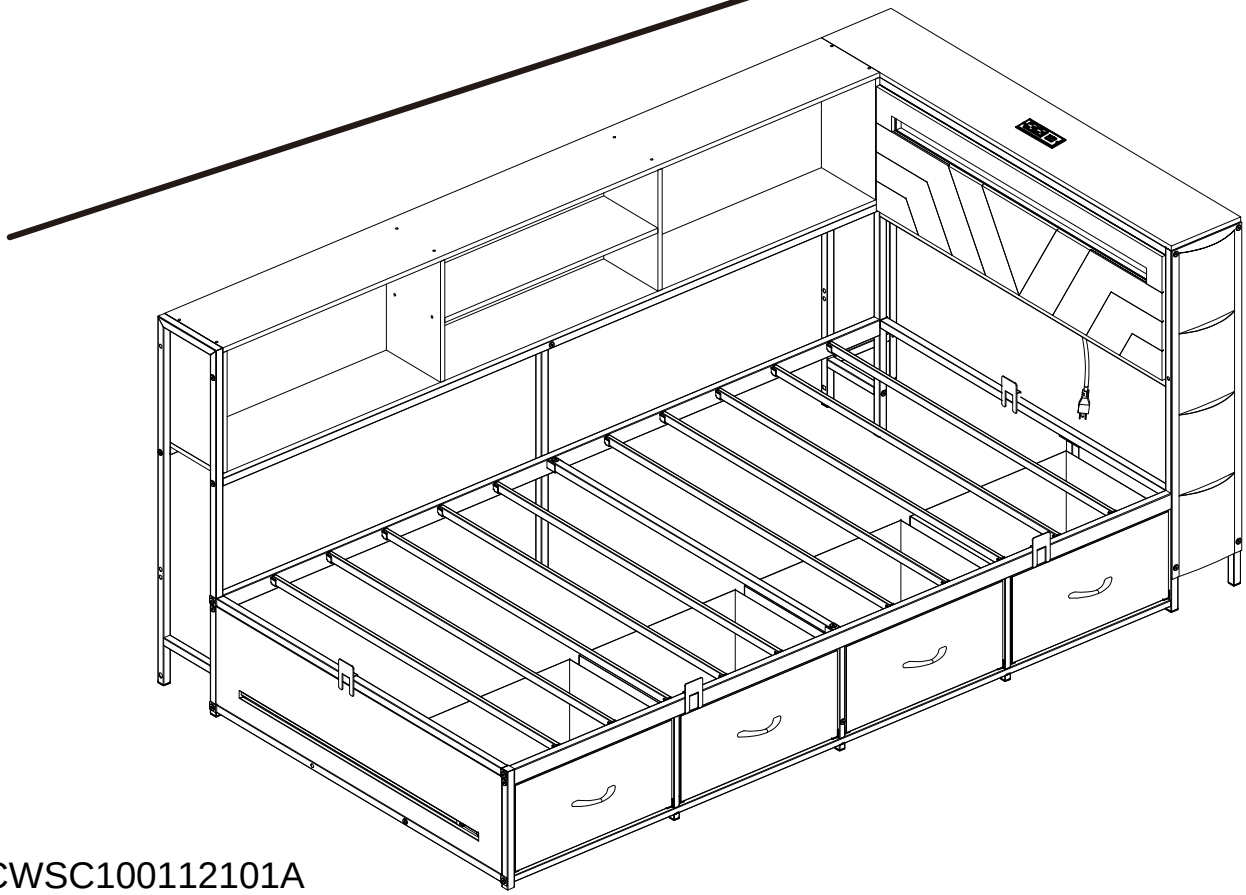

DCWSC100112101A
DCWSC100112102A

Version : 1.0

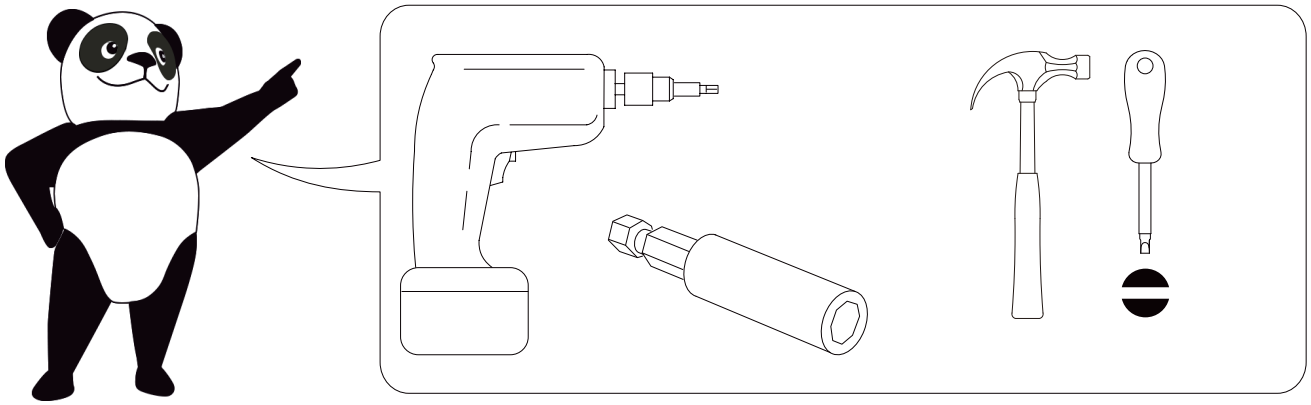

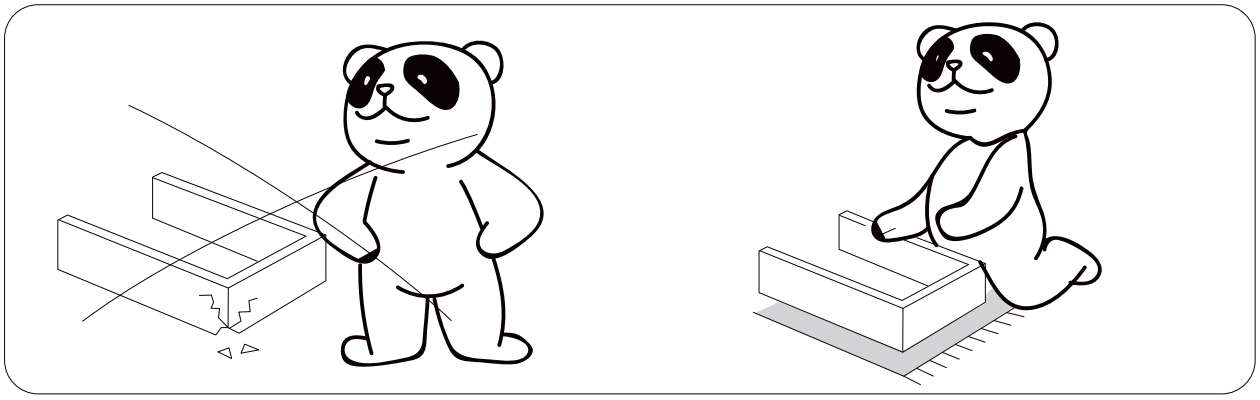

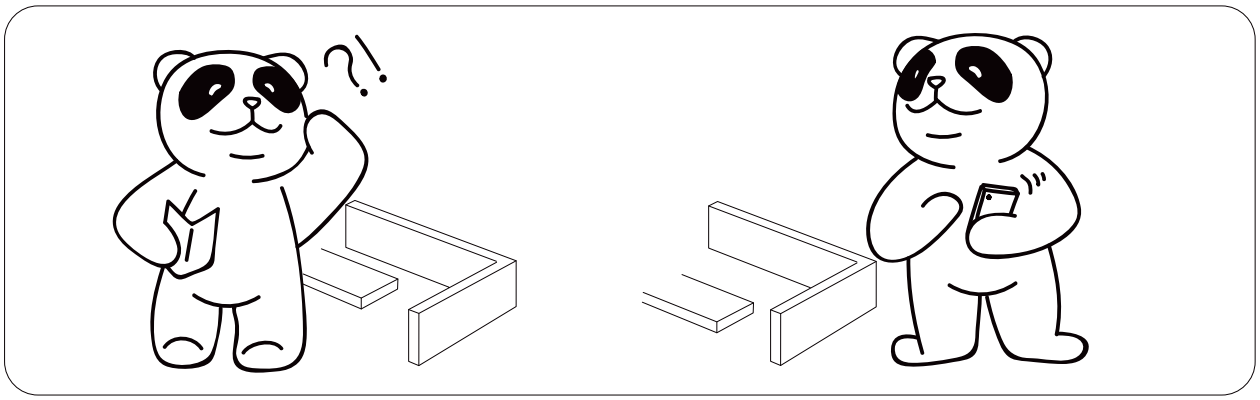

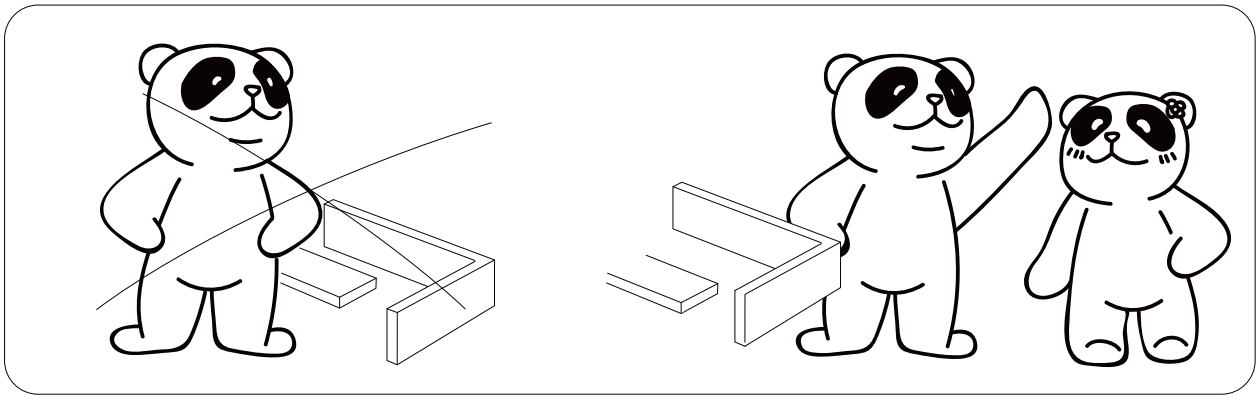

Assembly Instruction

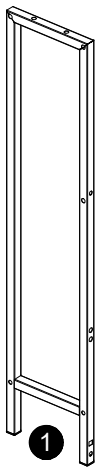

1
x2

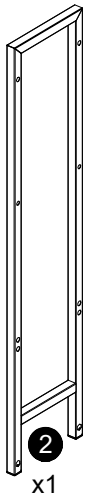

2
x1

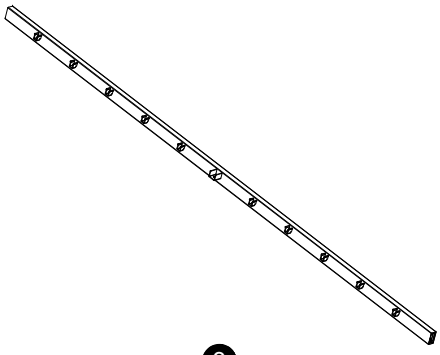

3
x1

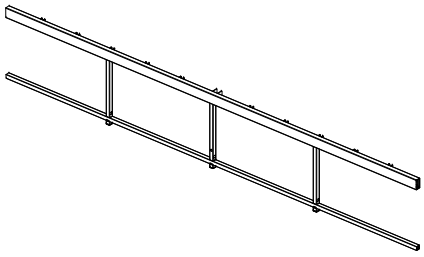

4
x1

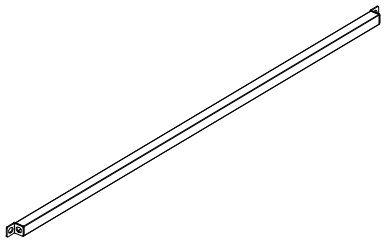

5
x1

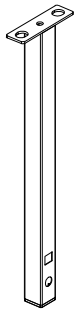

6
x1

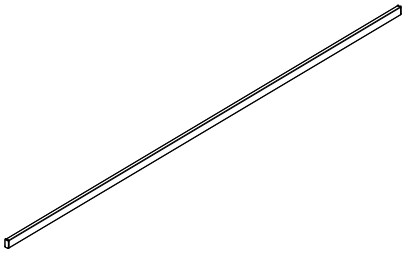

7
x10

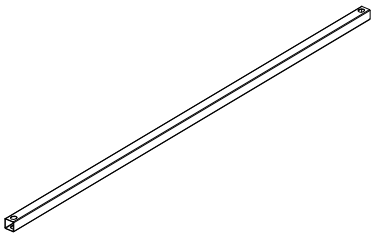

8
x1

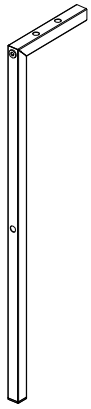

10
x1



11
x1

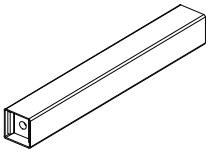

12
x1



13
x1

Assembly Instruction

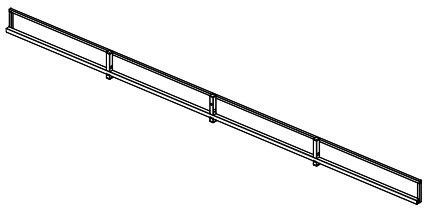

15
x1

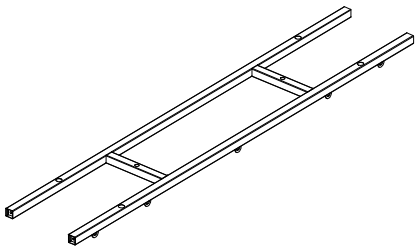

17
x1

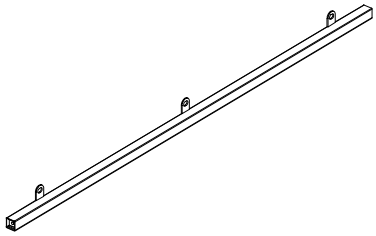

18
x1

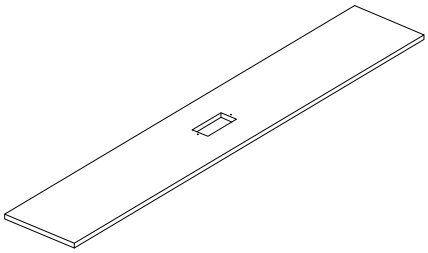

19
x1

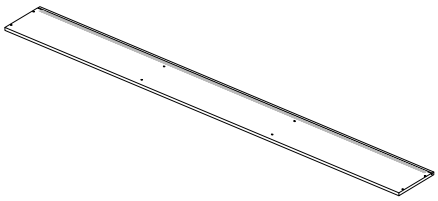

20
x1

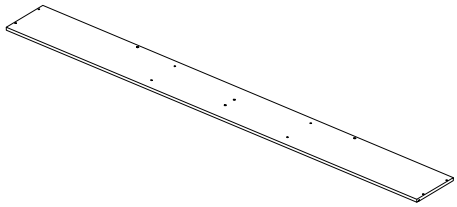

21
x1

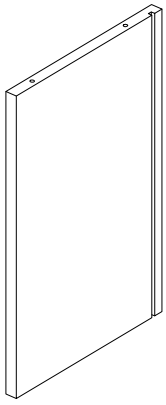

22
x2

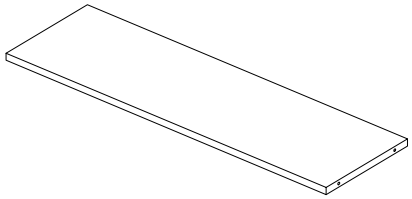

23
x1

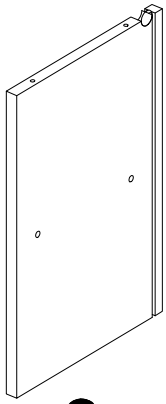

24
x2

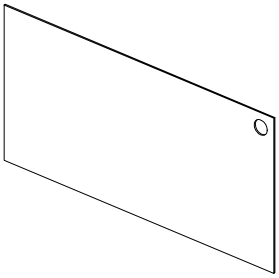

25
x2

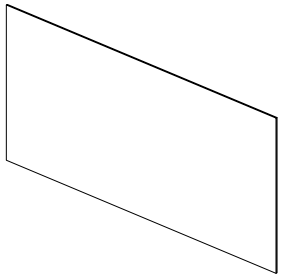

26
x1

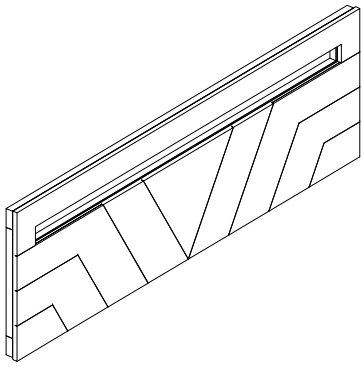

27
x1

Assembly Instruction

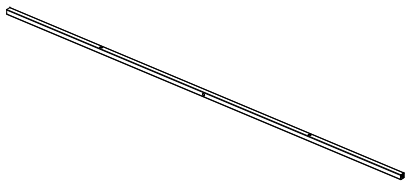

28
x2

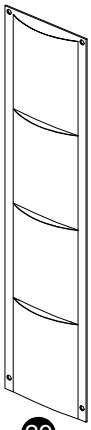

29
x1

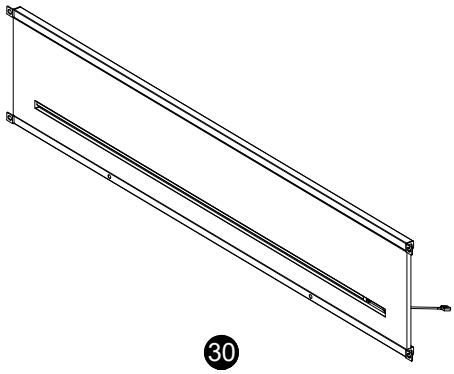

30
x1

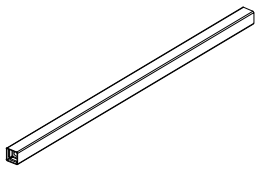

31
x1

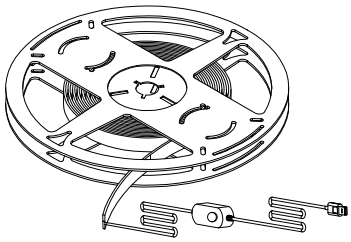

AA
x1

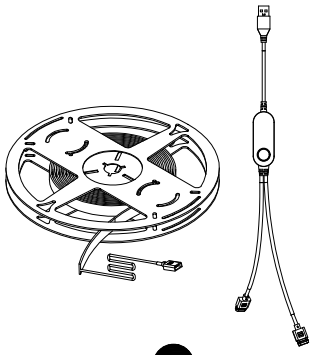

AA1
x1

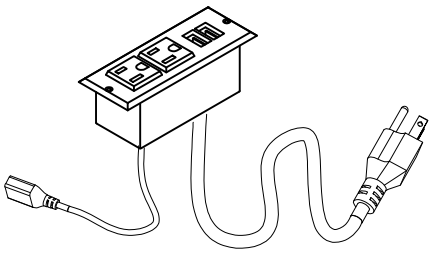

BB
x1



CC
x6

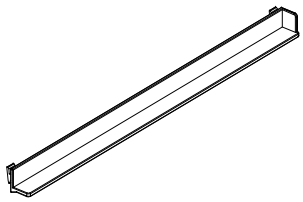

EE
x4

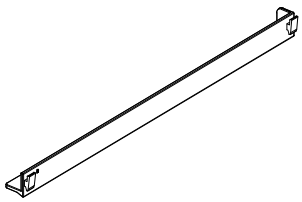

FF
x4

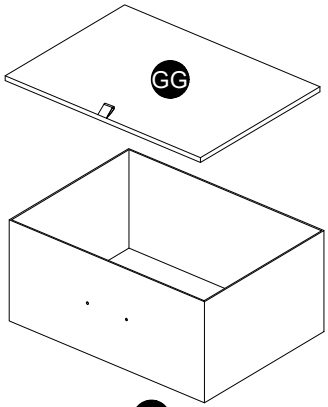

GG
x4



HH
x4

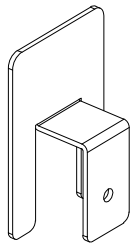 TT x4	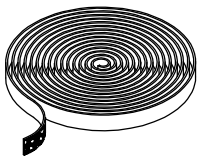 DD x1	

Assembly Instruction

Hardware List

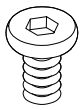 A M6*15 x10+1	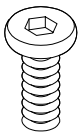 B M6*28 x12+1	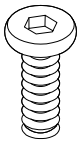 C M6*30 x5	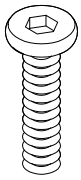 D M6*40 x17+2	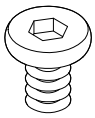 E M8*15 x1	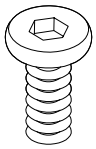 F M8*30 x2	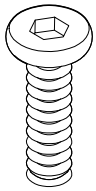 G M8*40 x8+1	 J ST3*12 x2+1	 K ST4*12 x8+2	 L S5 x1
 M M6*15 x2	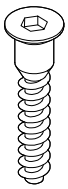 N ST5*30 x20+3	 P S3 x1	 Q S4 x1						

Note:

1, should be assembled on flat ground to keep balance.

2, Before completing the installation, do not tighten the screws.

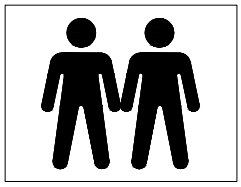

It needs at least two people to install.

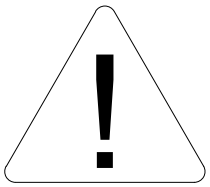

Before starting follow the the assembly, you must read the whole manual and instructions.

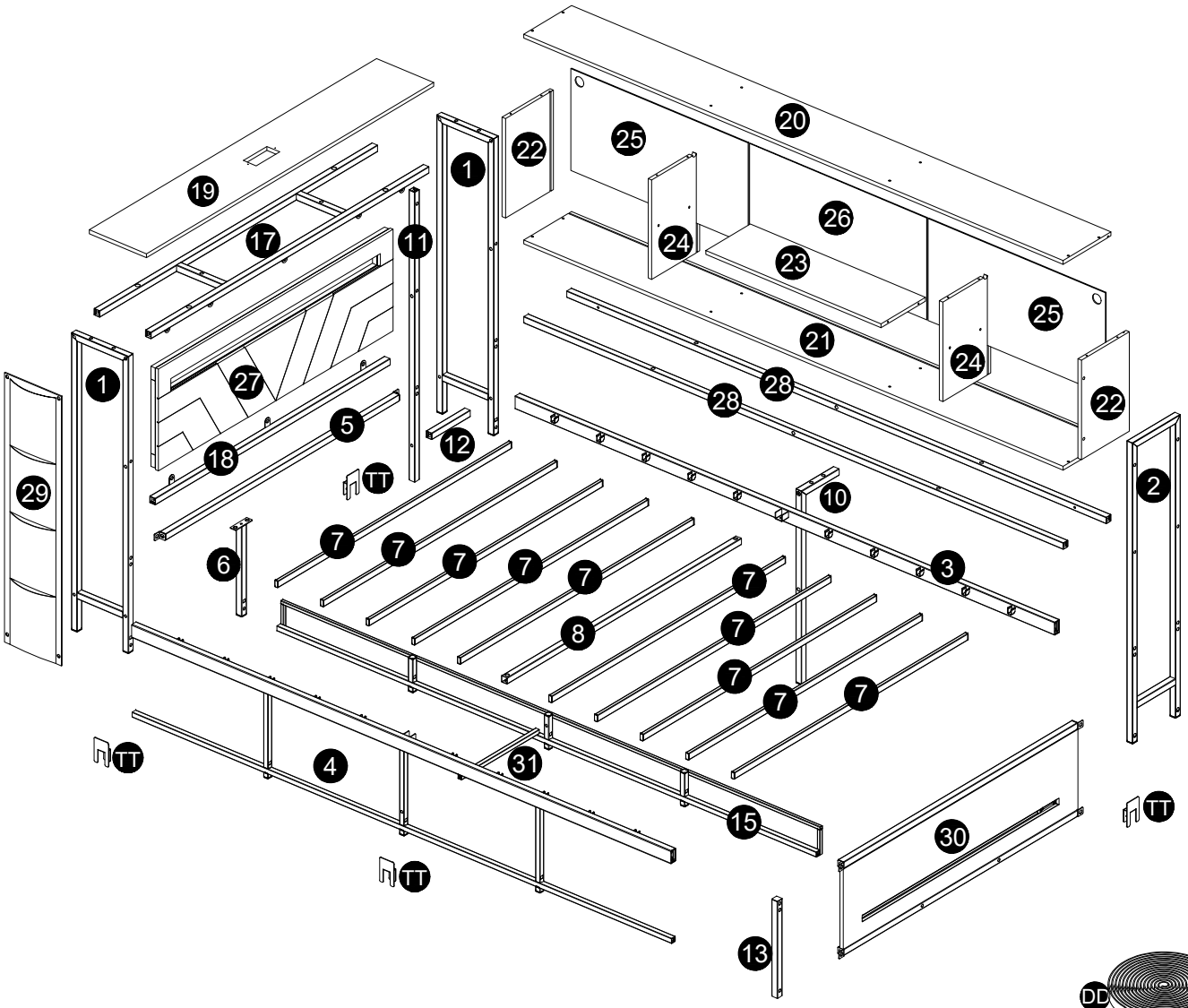

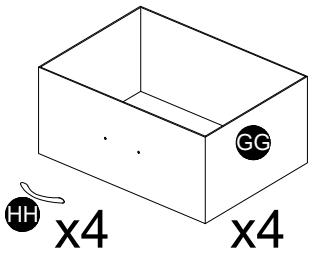

x4

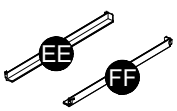

x4

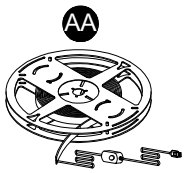

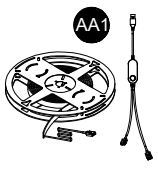

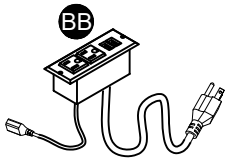

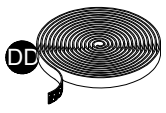

There are 2 ways to install this bed, each with different steps. The following is the first way, please assemble according to the assembly steps.

Type 1: Please refer to Step 1~ Step 35 .

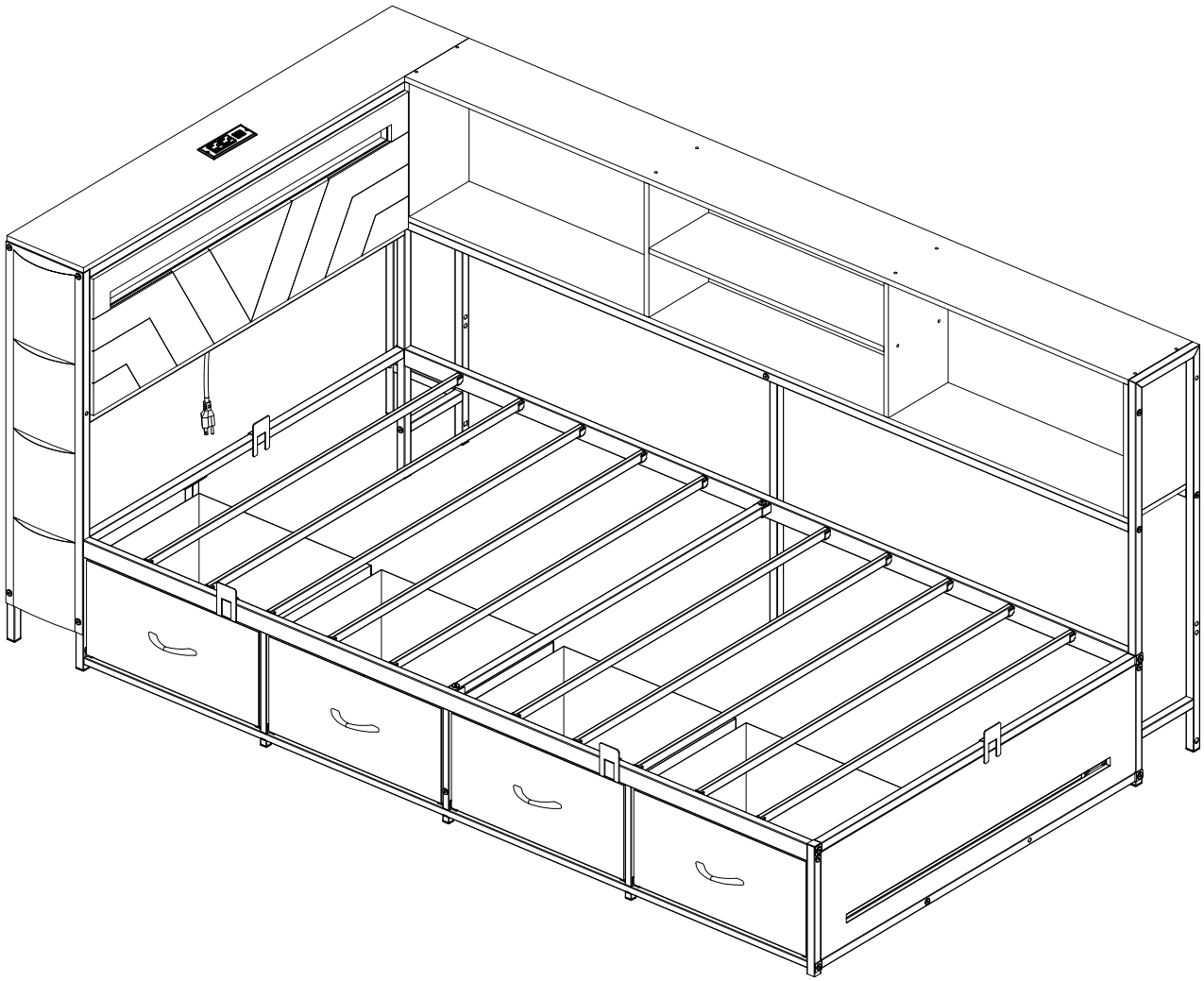

1

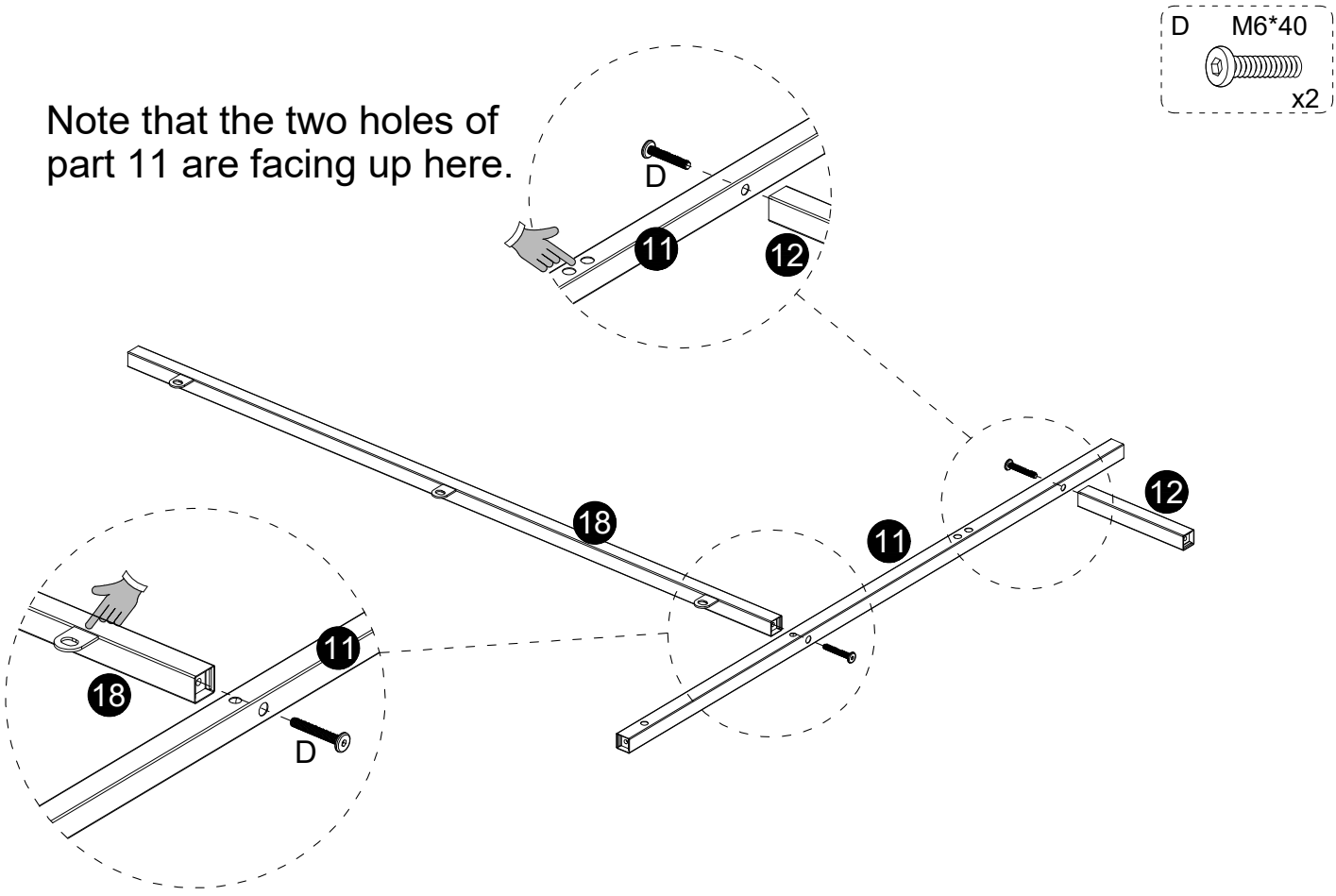
D M6*40
x2
Note that the two holes of part 11 are facing up here.
D
11
12
18
11
12
11
18
D

2

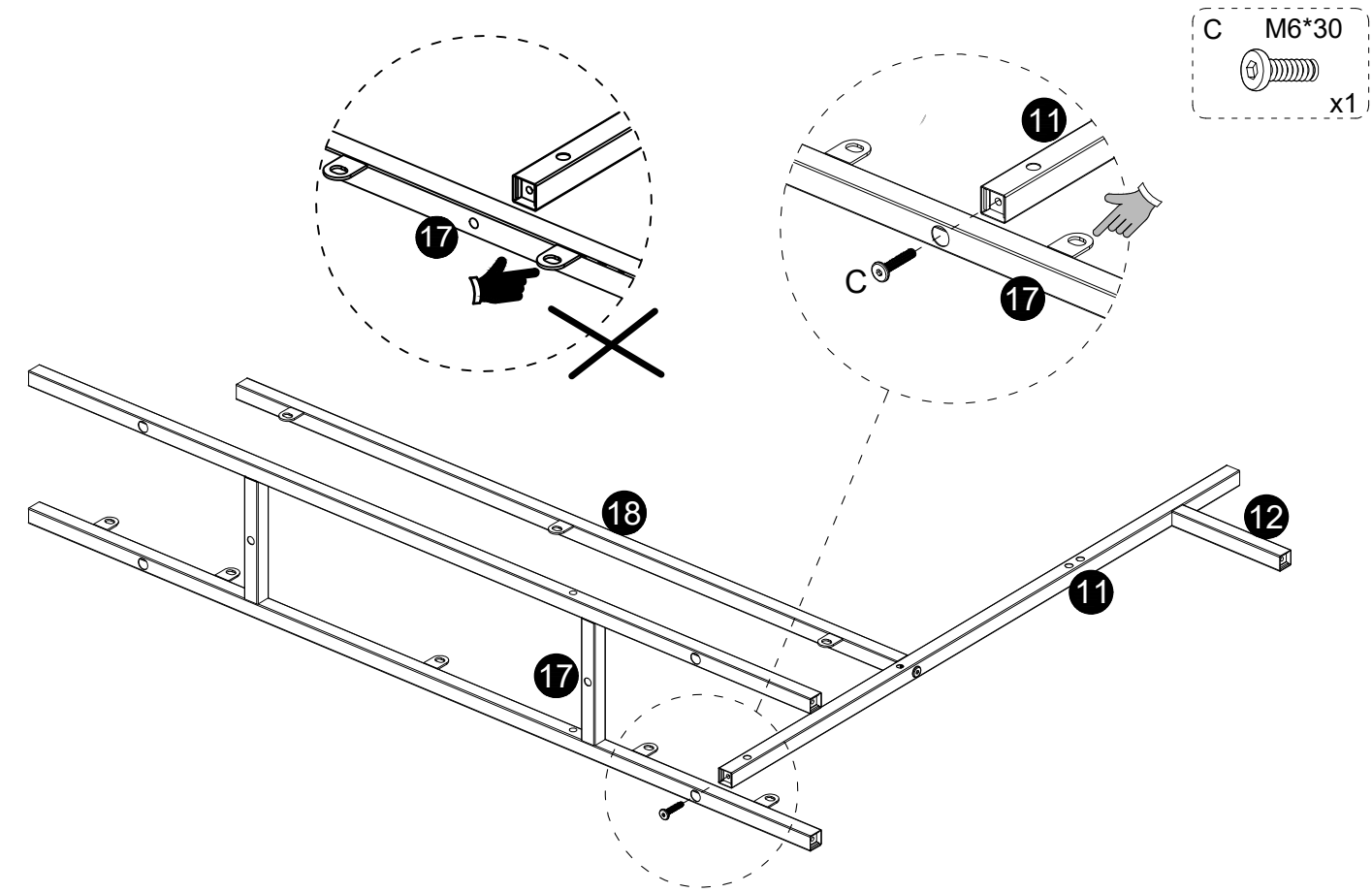
C M6*30
x1
17
11
C
17
18
12
11
17

3

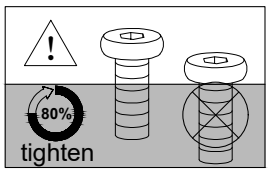

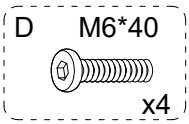

4

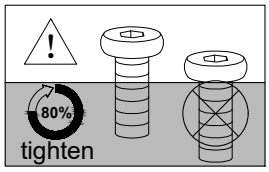

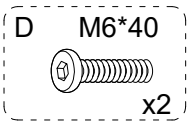

Pay attention to the opening direction of No.29 cloth bag.

5

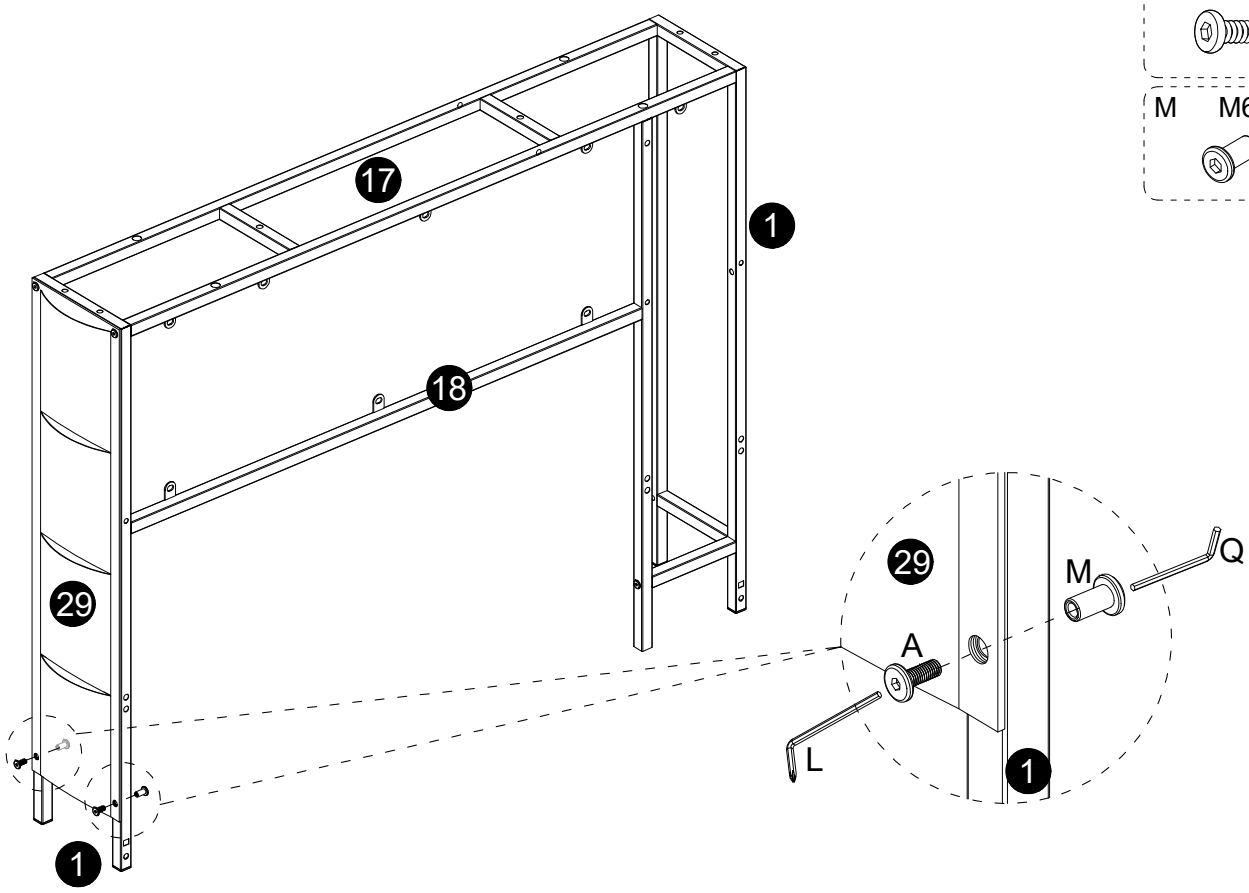
A M6*15
x2
M M6*15
x2
17
1
18
29
29
M
Q
A
L
1
1

6

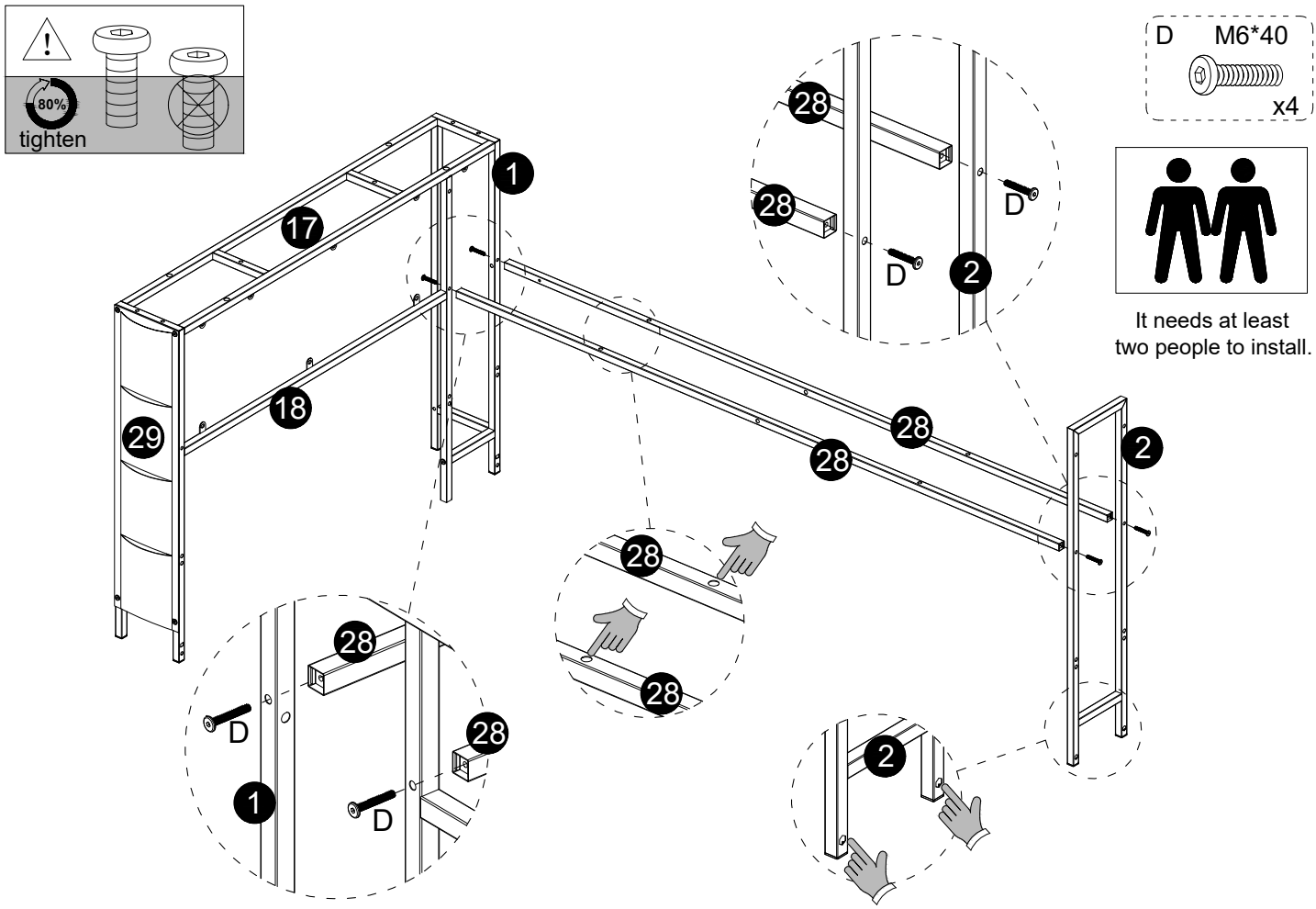
80%
tighten
D M6*40
x4
It needs at least
two people to install.
28
28
D
D
2
1
17
18
29
28
28
2
28
28
28
D
D
1
2

7

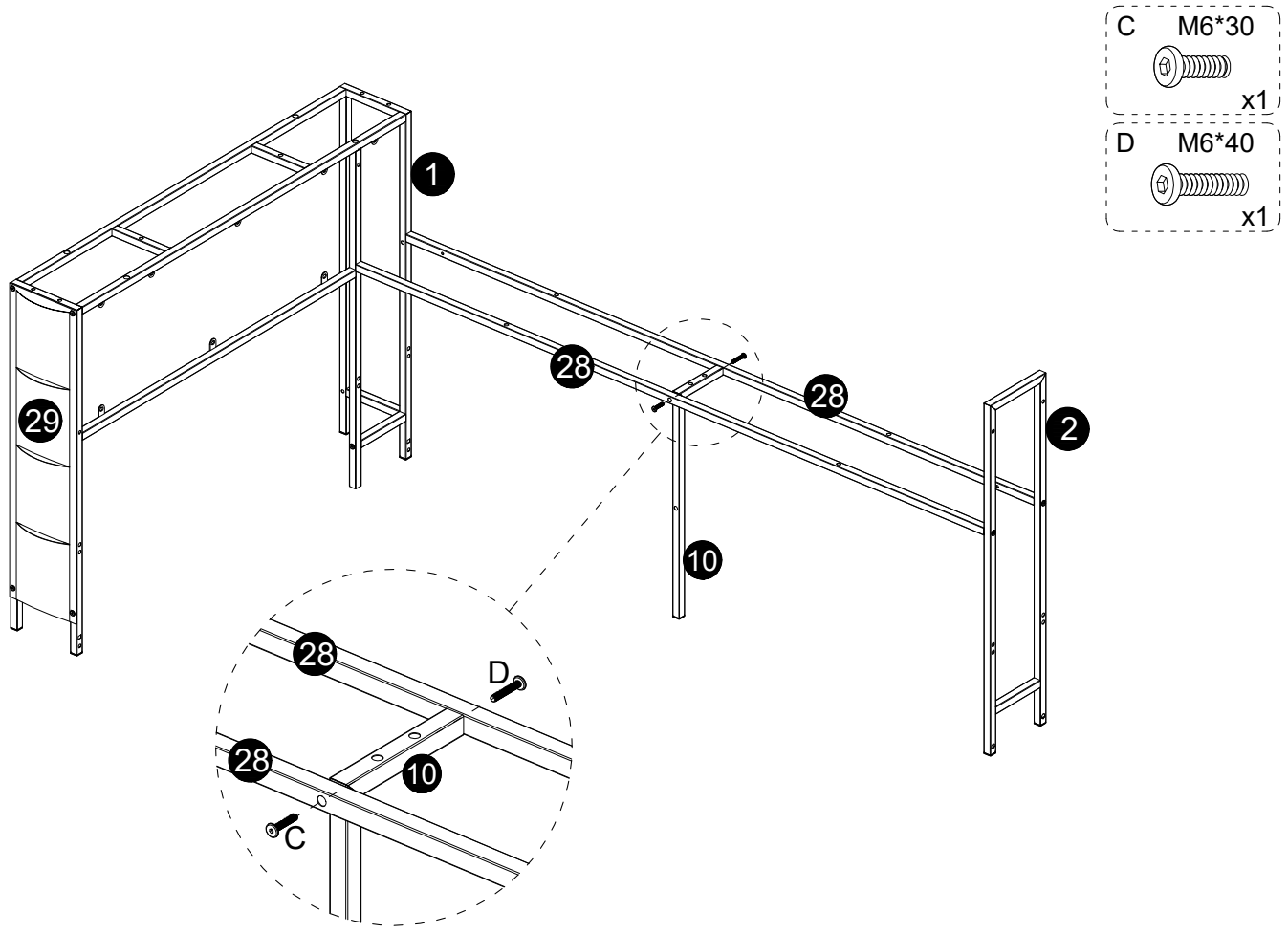
C M6*30
x1
D M6*40
x1
1
28
28
29
2
10
28
D
28
10
C

8

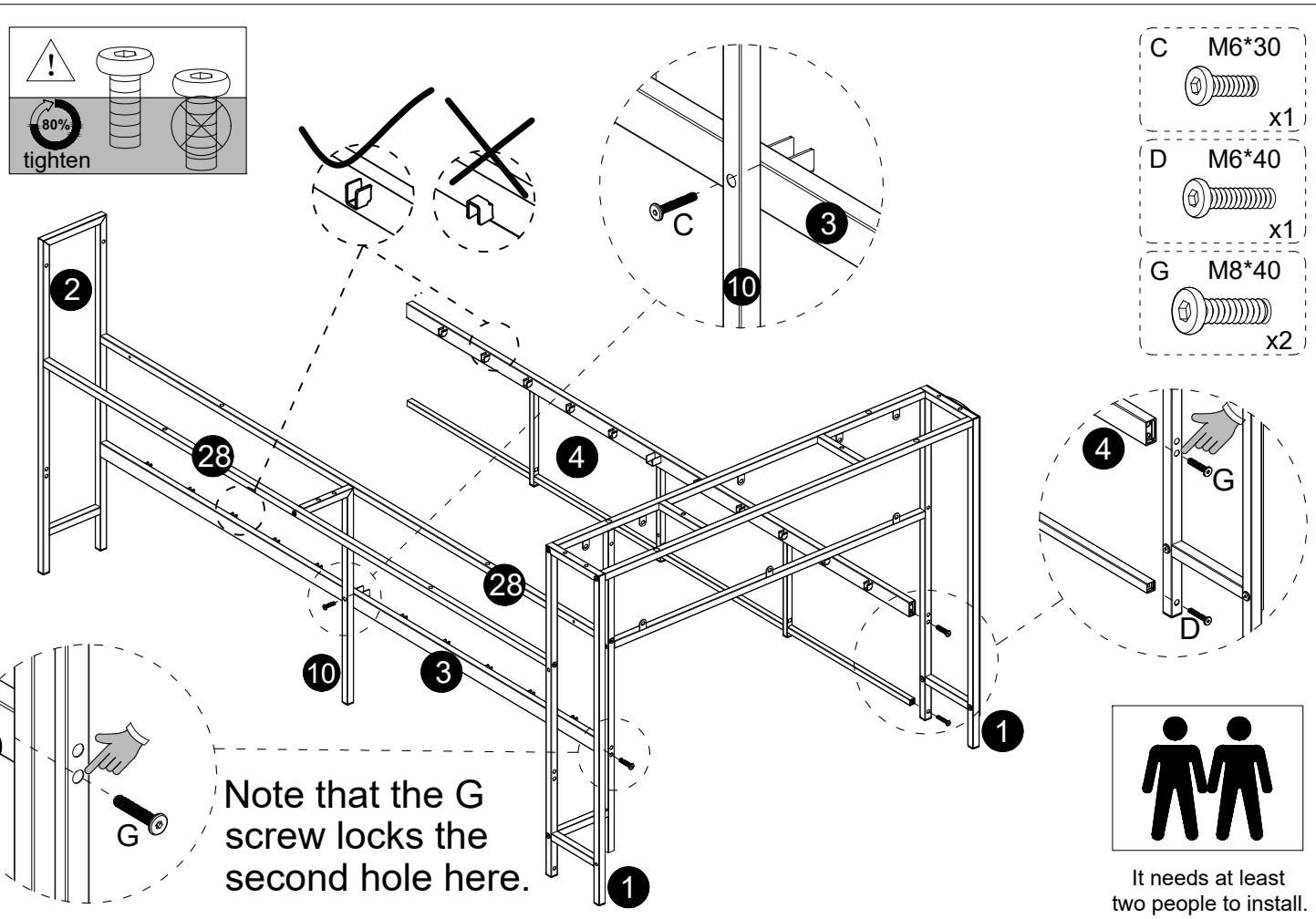
80%
tighten
C M6*30
x1
D M6*40
x1
G M8*40
x2
C
3
10
2
28
4
28
10
3
4
G
D
1
3
G
Note that the G screw locks the second hole here.
1
It needs at least two people to install.

9

A M6*15 x2

Pay attention to the orientation of the iron sheet here in Part 5.

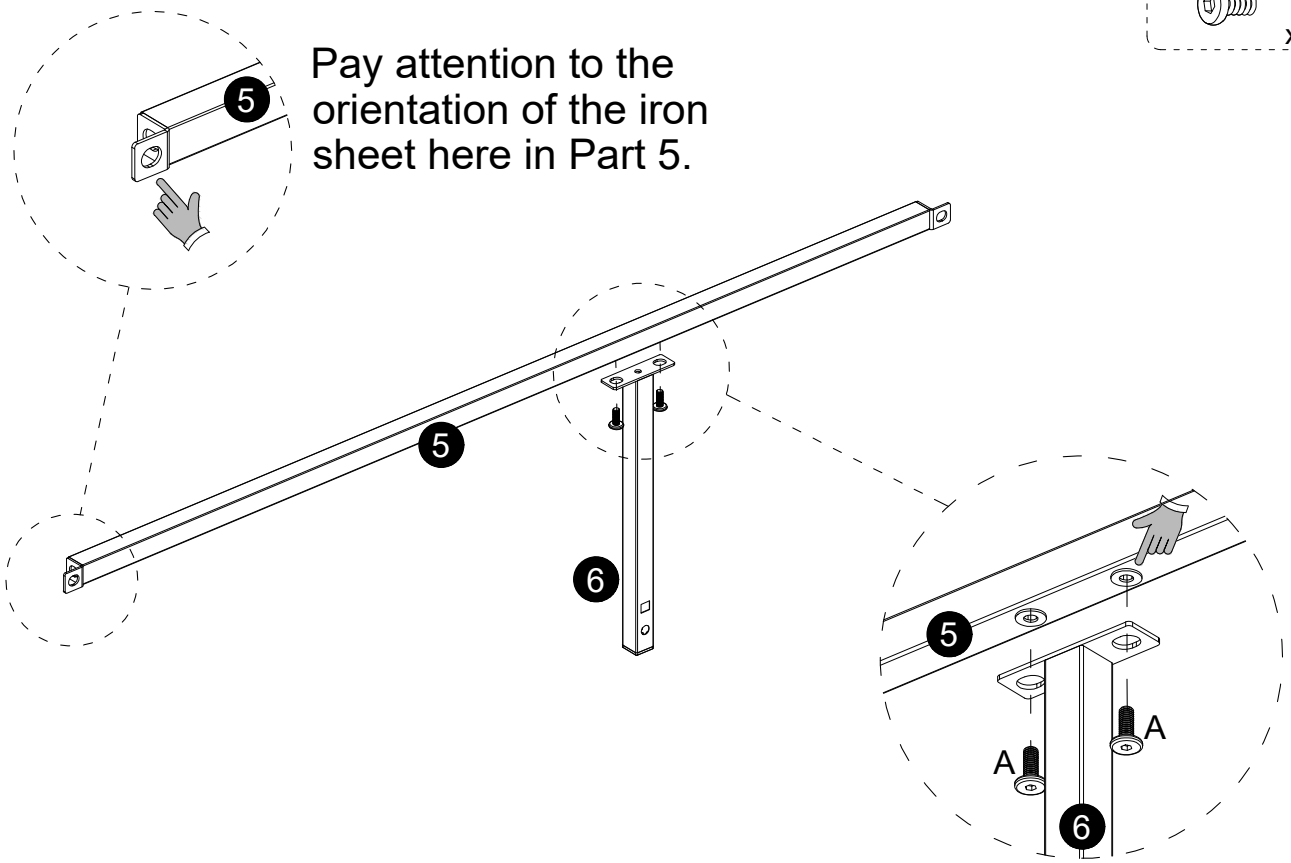

10

G M8*40 x2

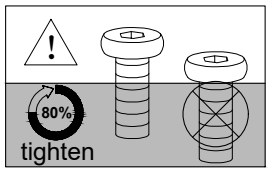

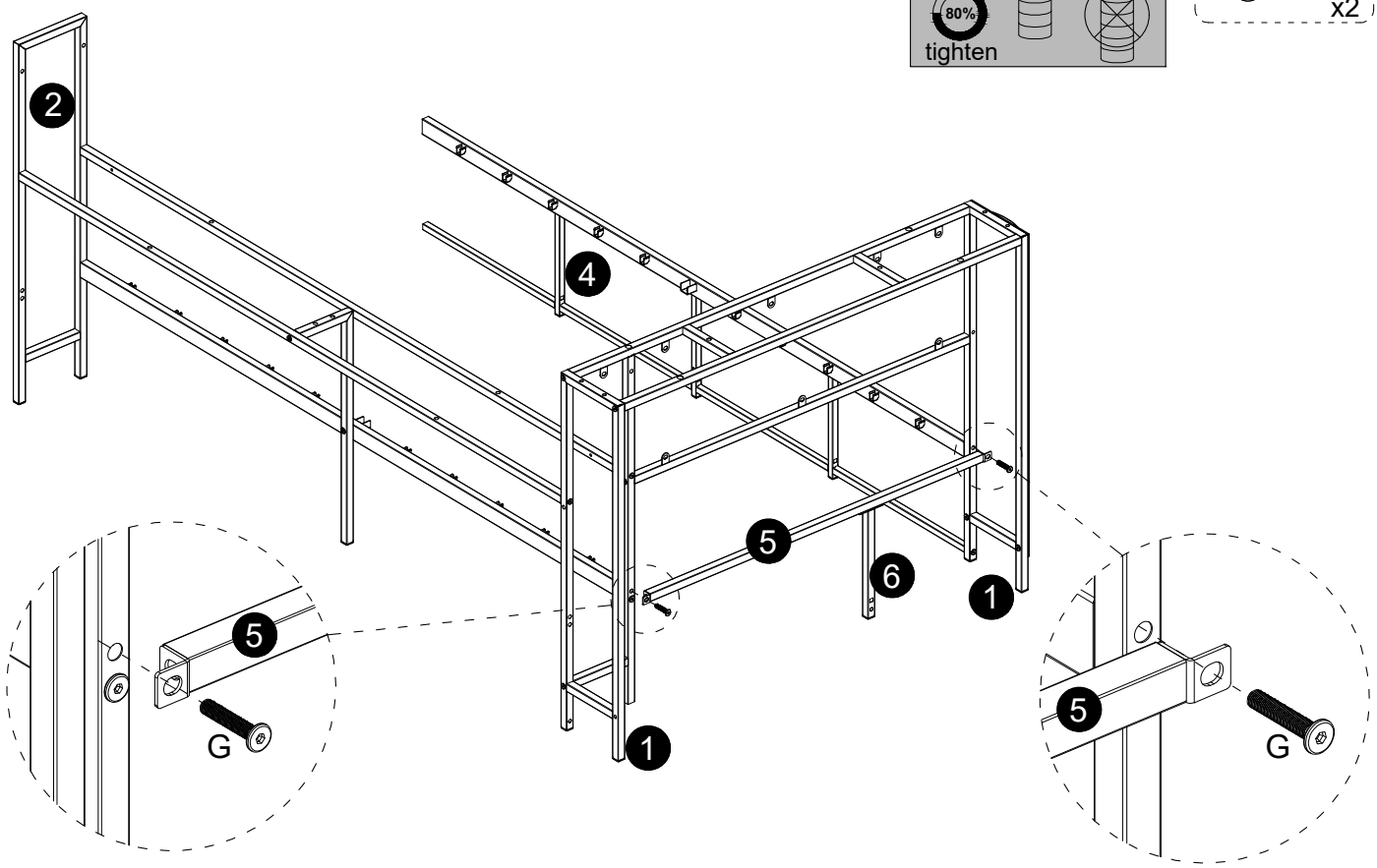

11

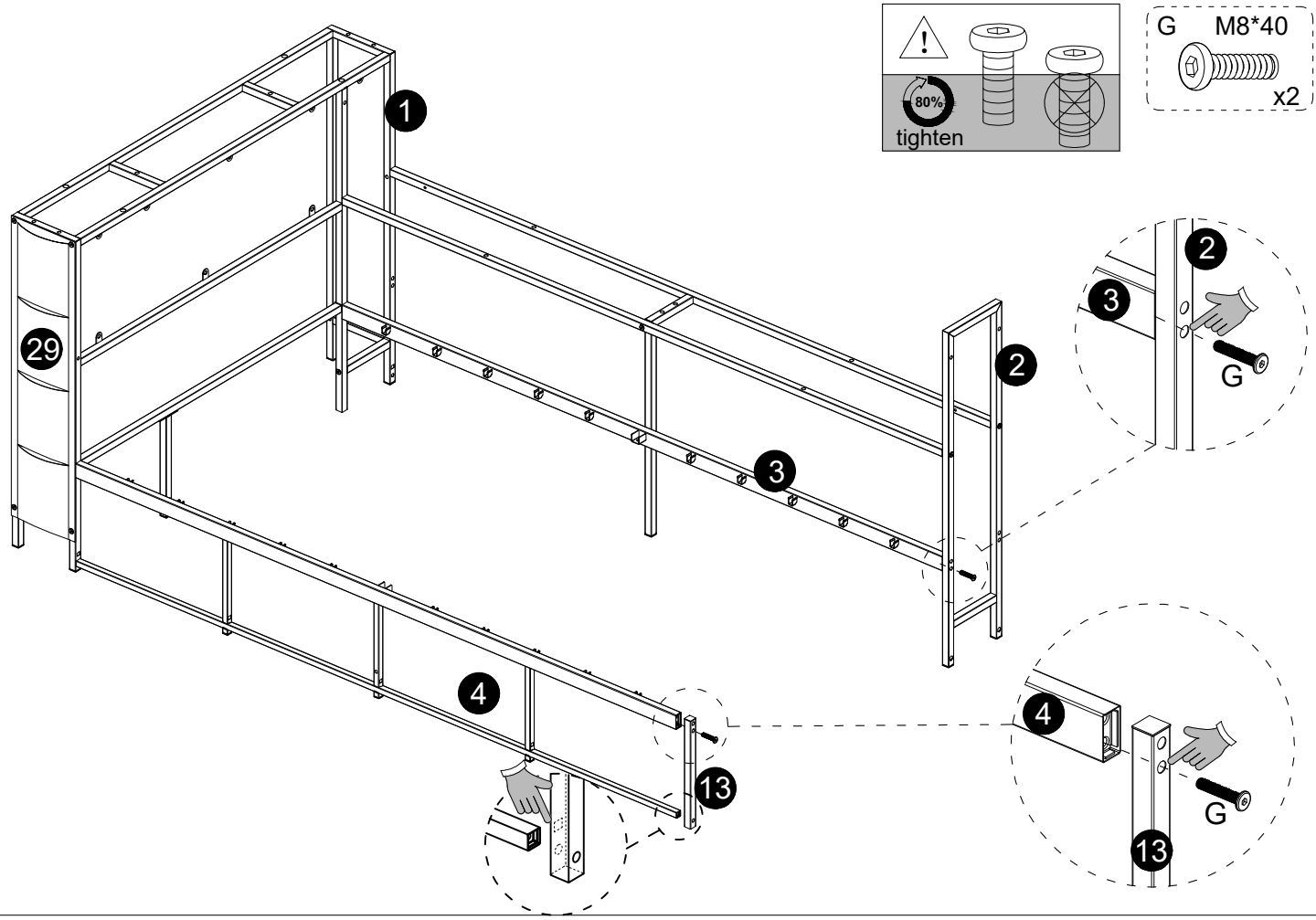
1
2
3
4
13
29
80%
tighten
G M8*40
x2
G

12

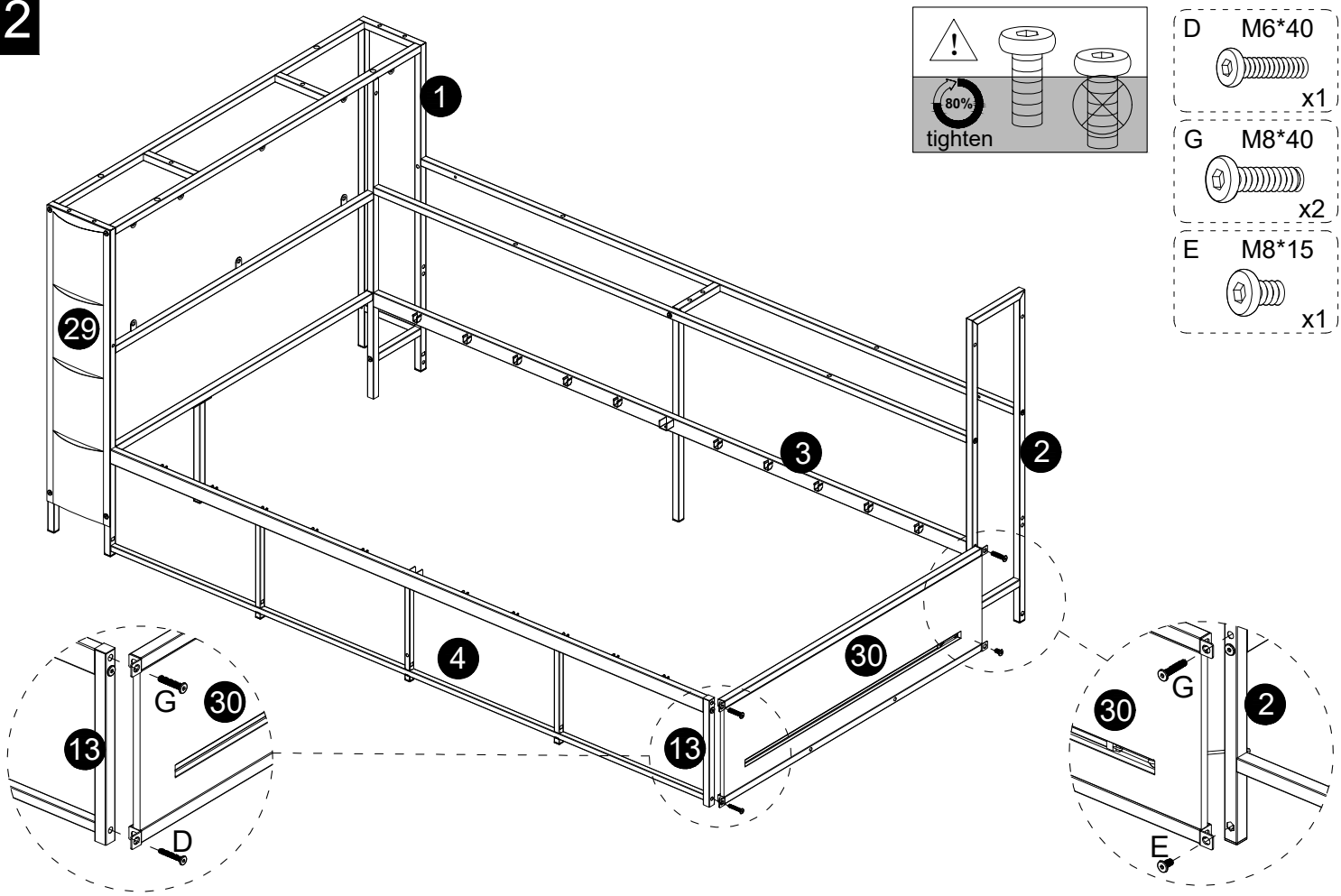
1
2
3
4
13
29
30
80%
tighten
D M6*40
x1
G M8*40
x2
E M8*15
x1
G
D
E

13

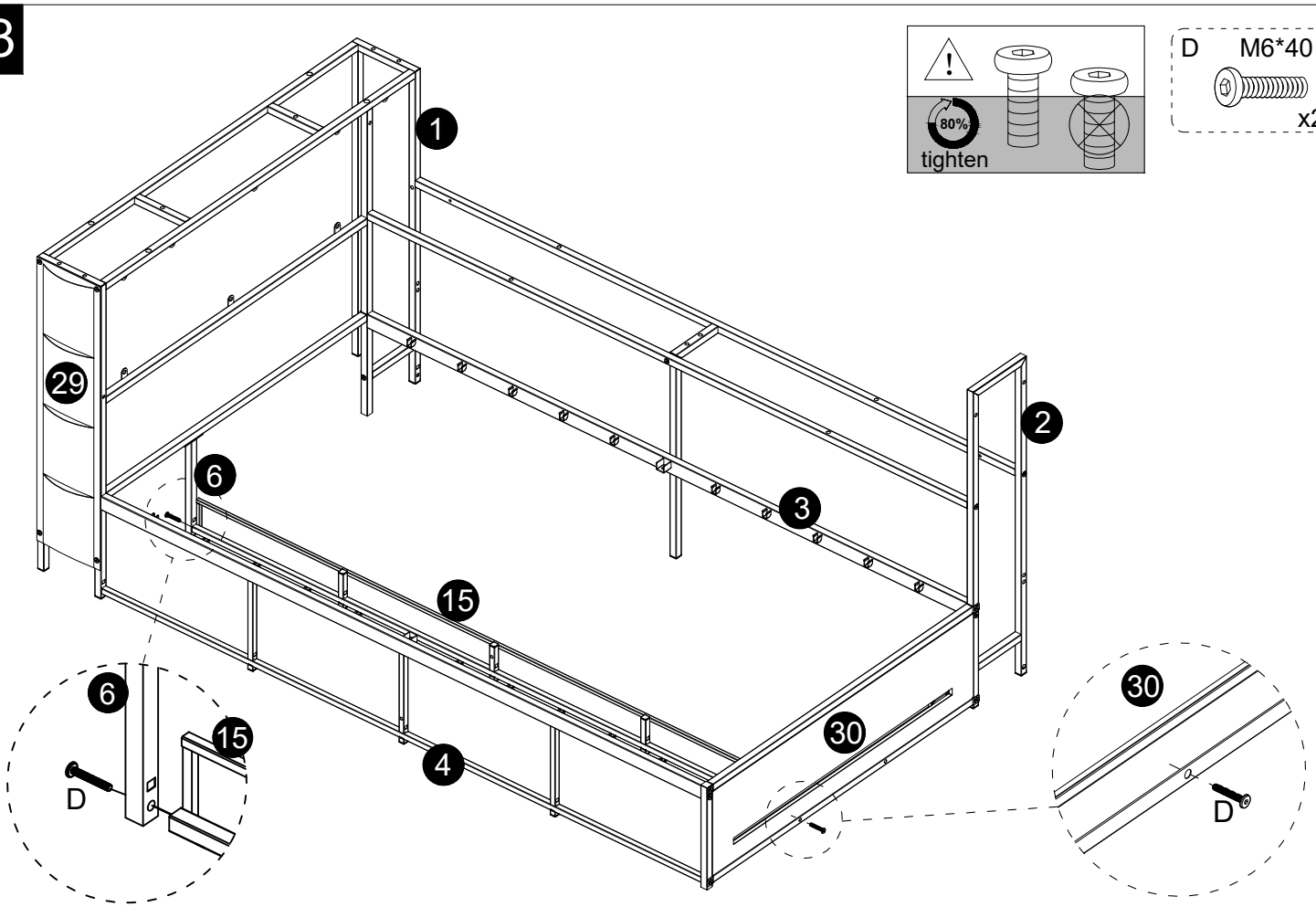
80%
tighten
D M6*40
x2
1
29
2
6
3
15
4
30
D
D

14

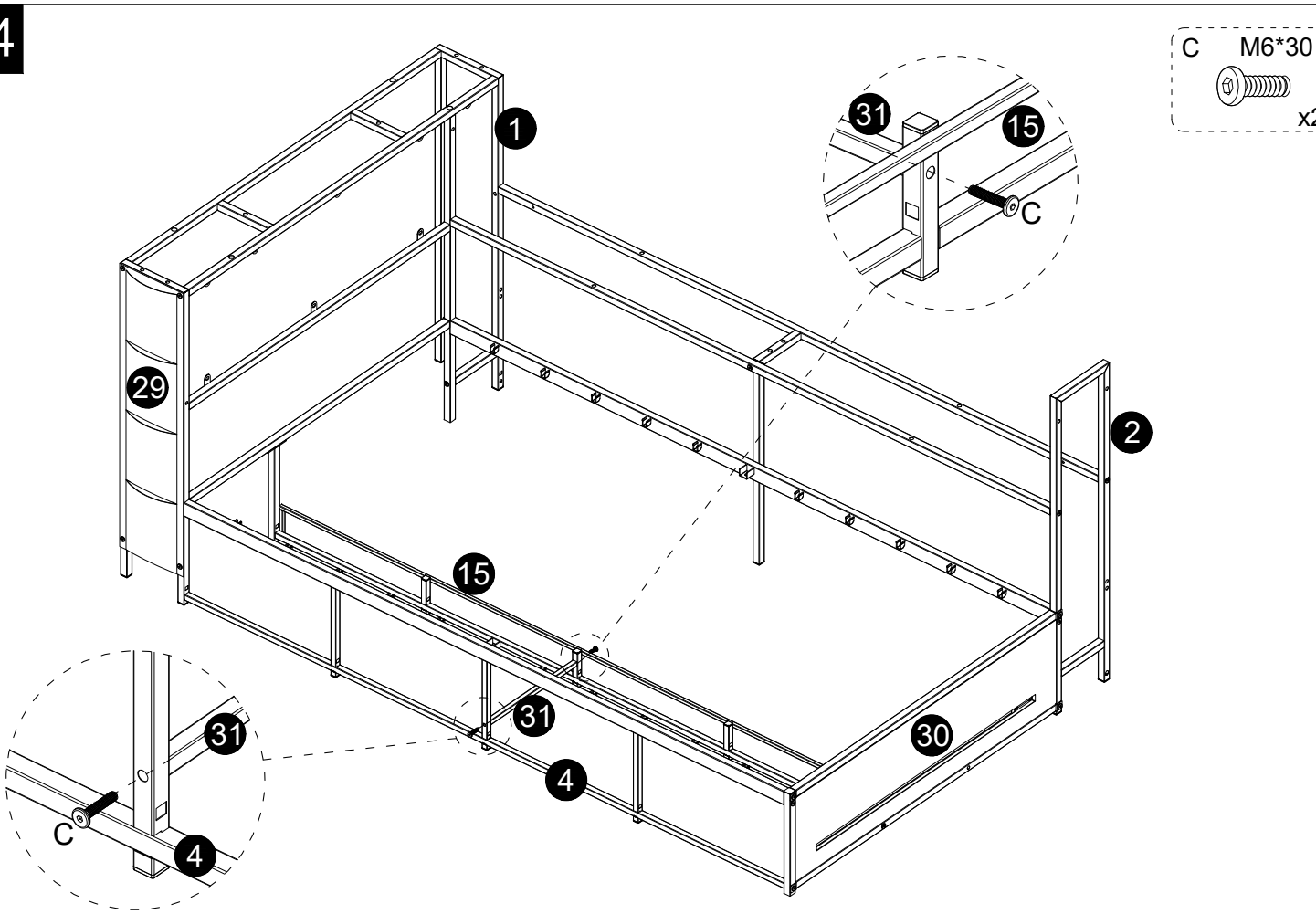
C M6*30
x2
31
15
C
1
29
2
15
31
31
30
4
C
4

15

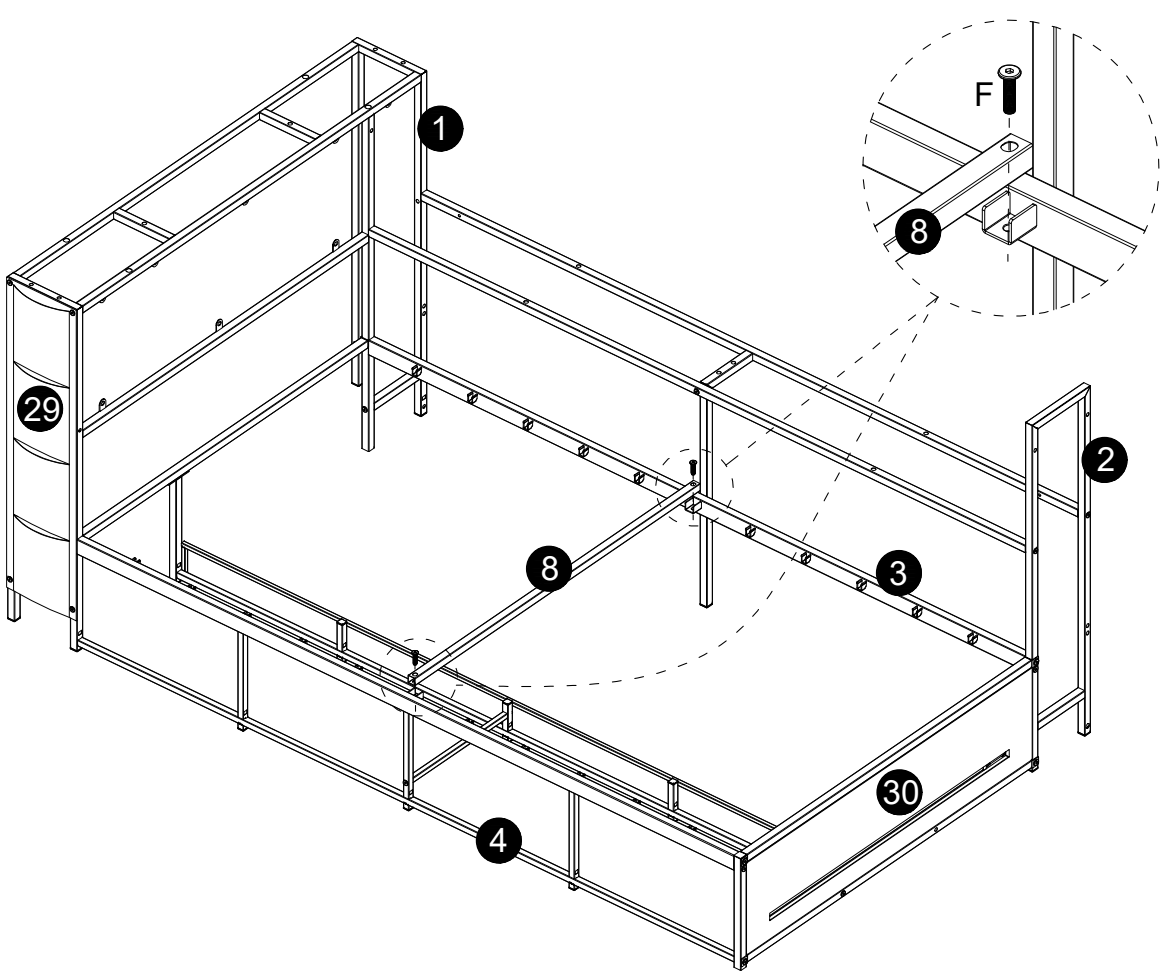

F M8*30 x2

16

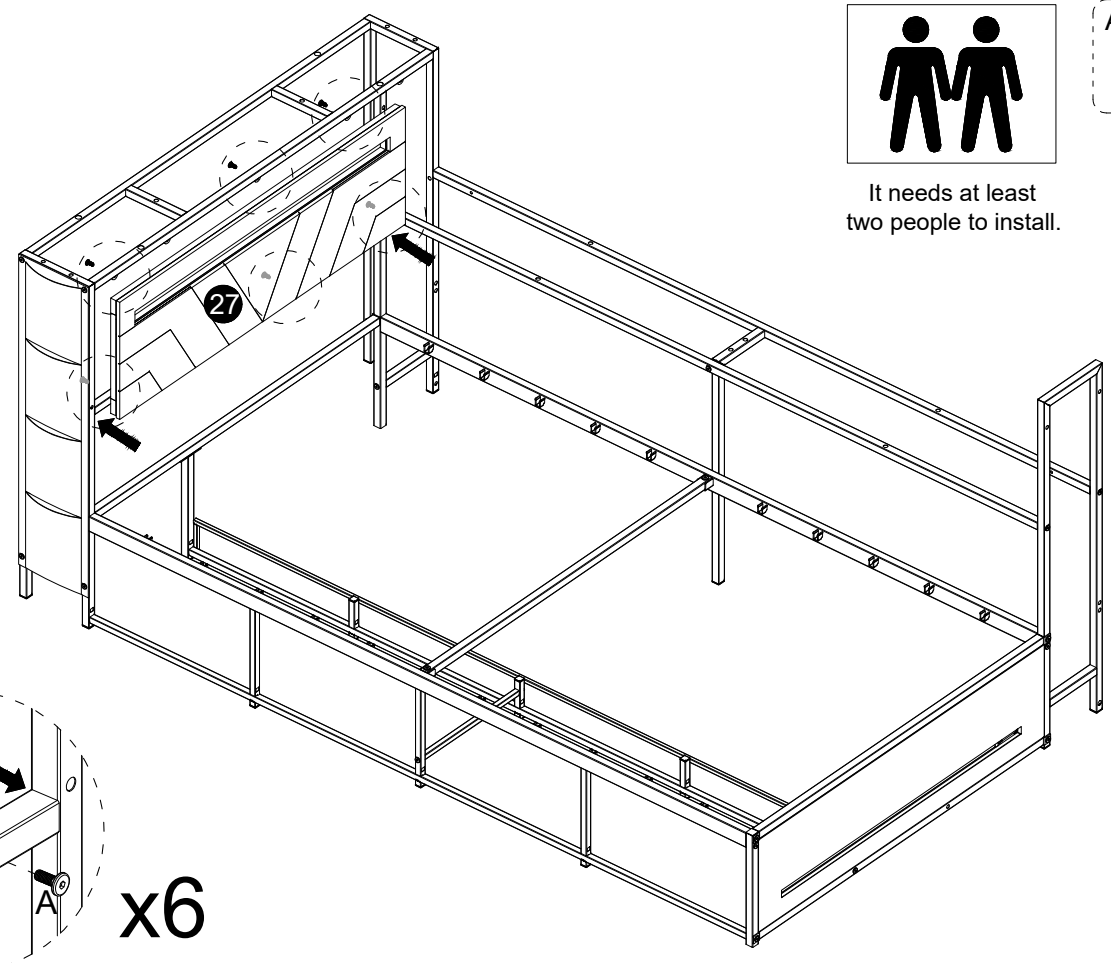

It needs at least two people to install.

A M6*15 x6

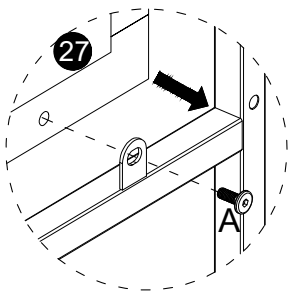

x6

17

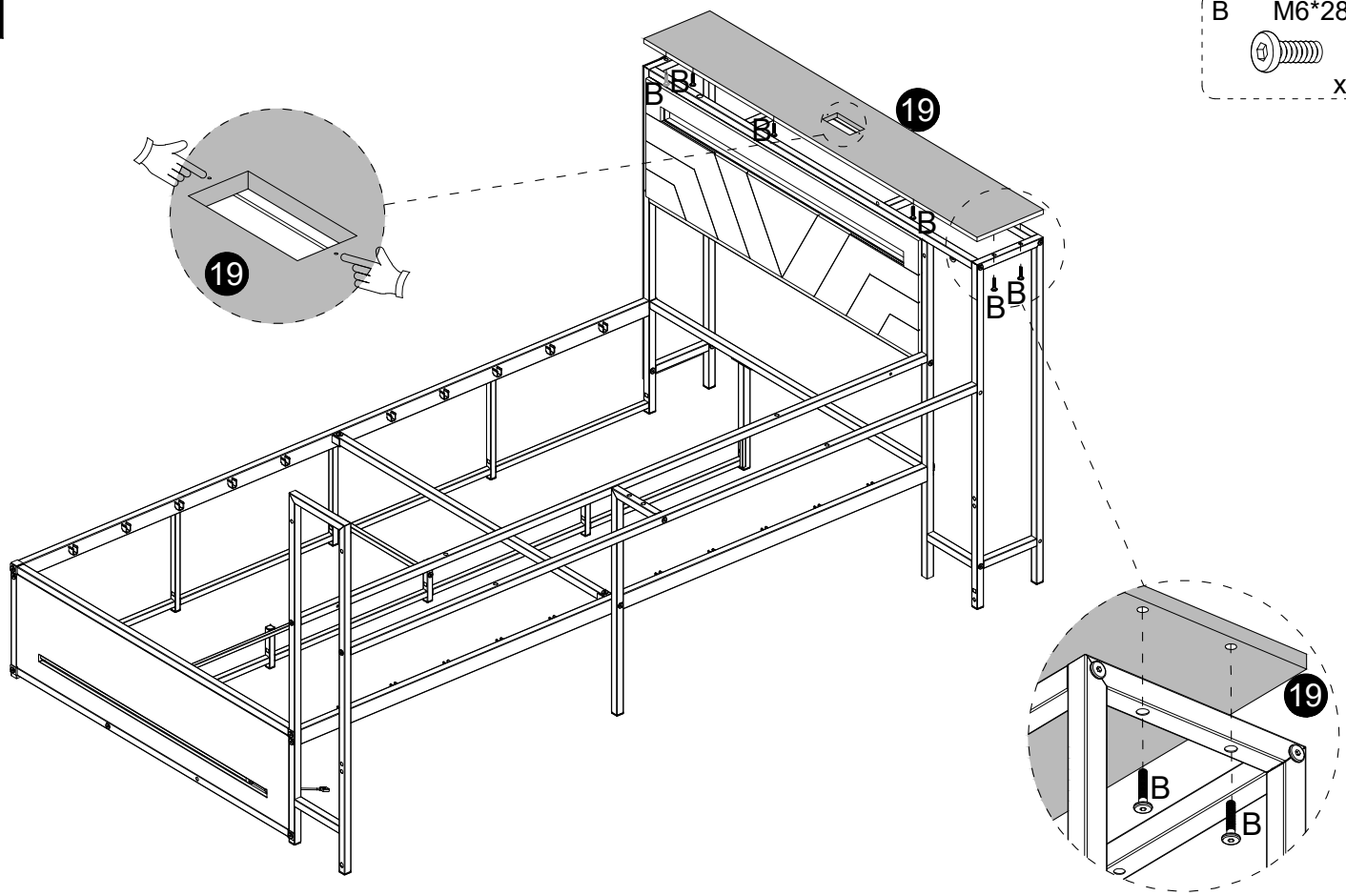

18

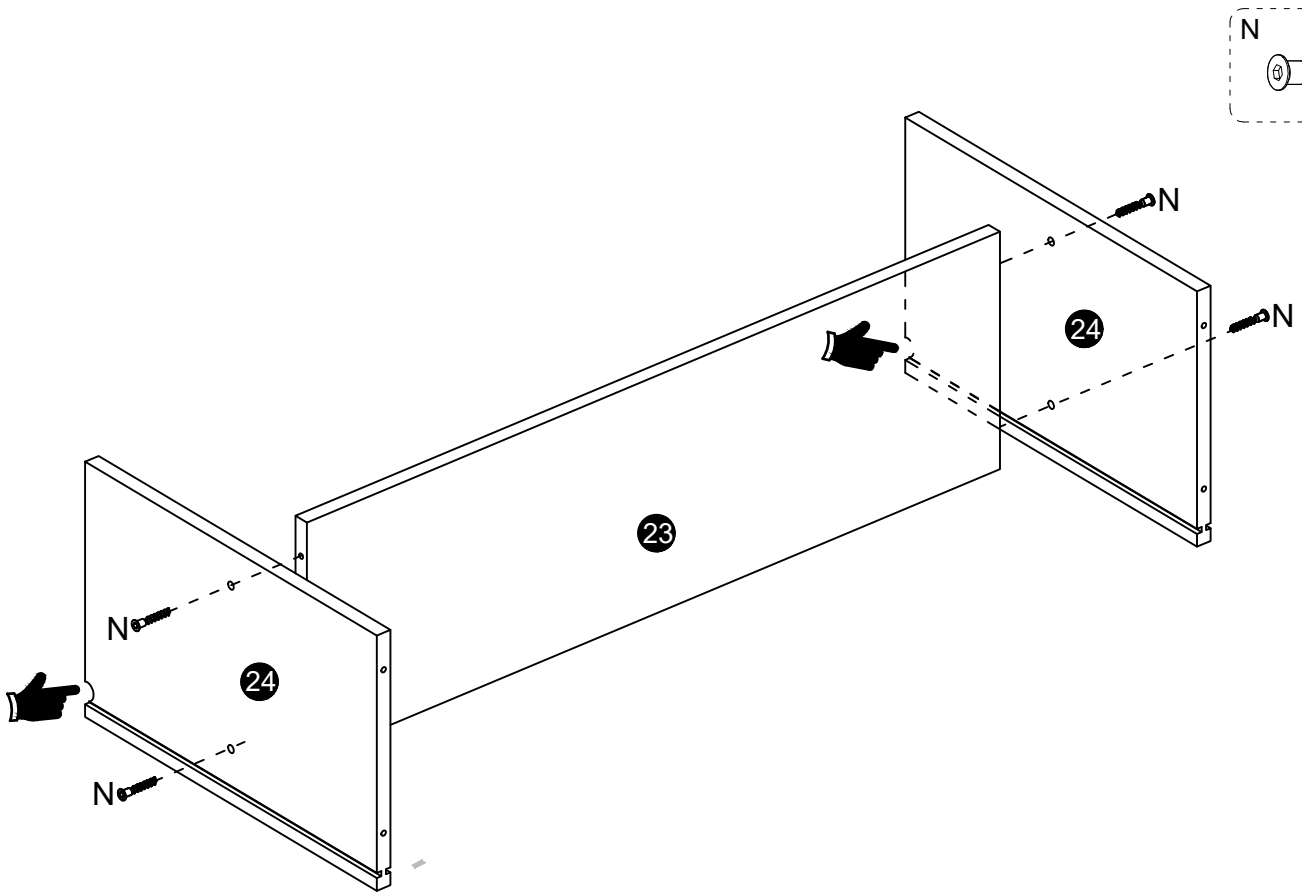

19

N ST5*30 x4

Pay attention to the notch direction of part 24 here.

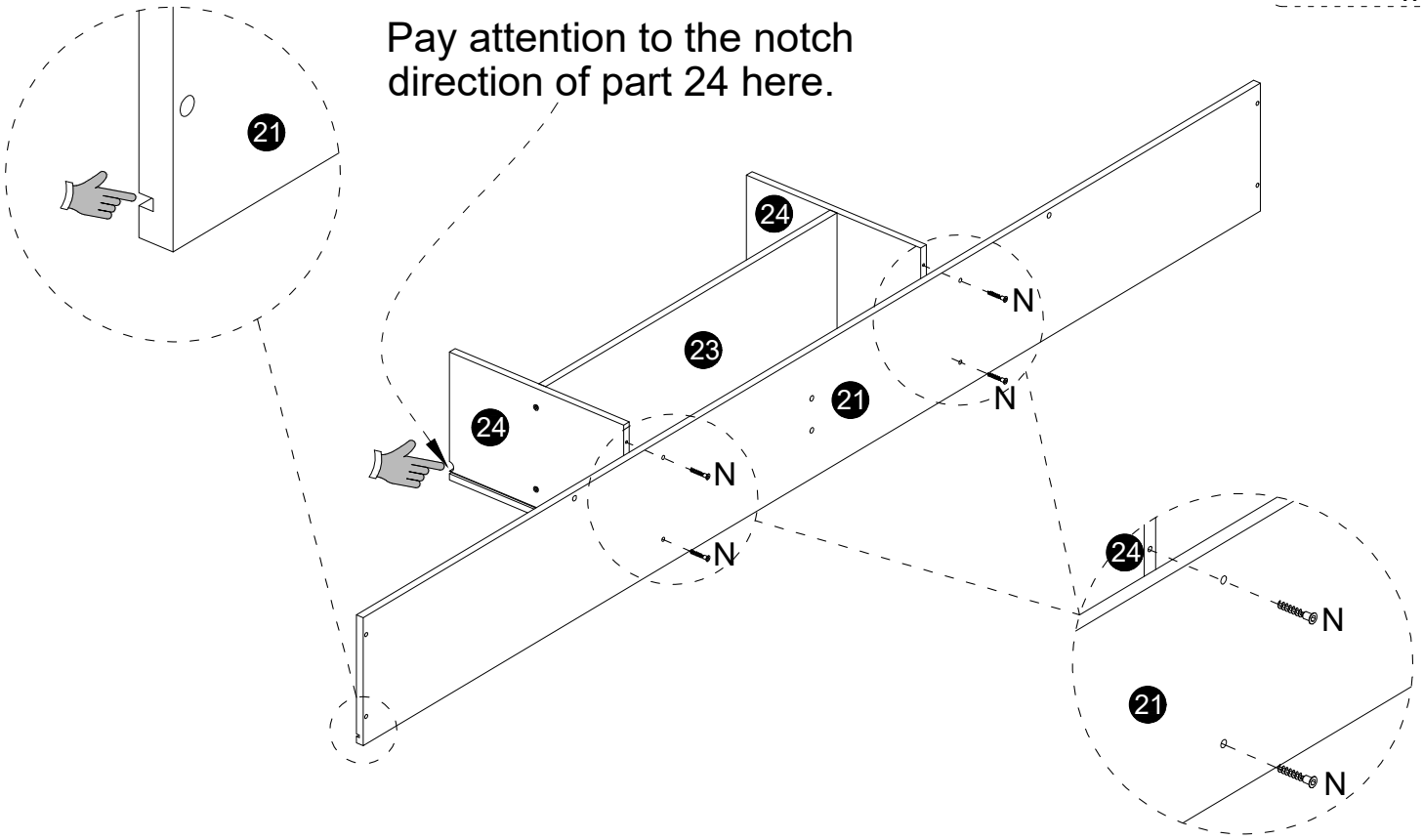

20

N ST5*30 x4

Note that the groove of part 22 is inward and the grooved side is downward.

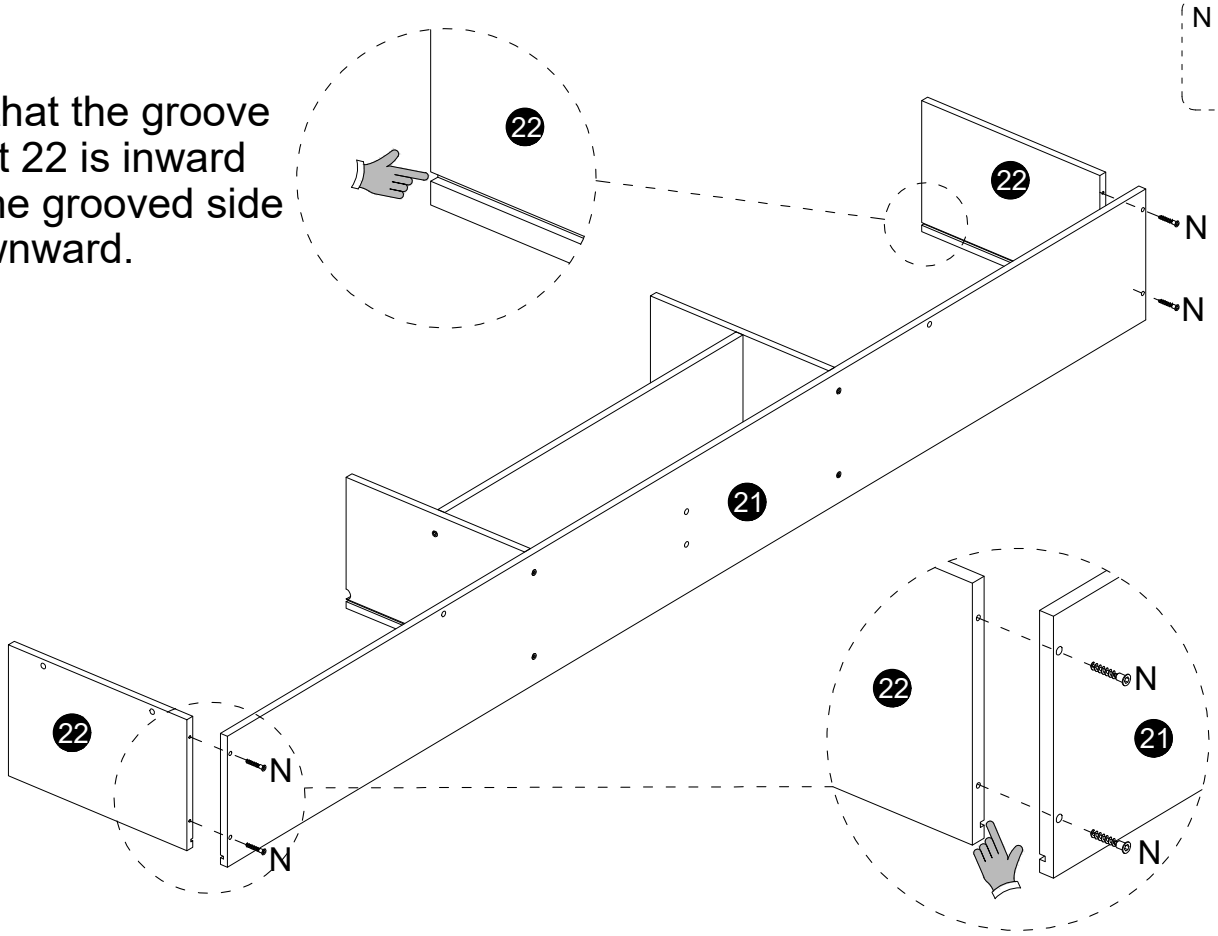

21

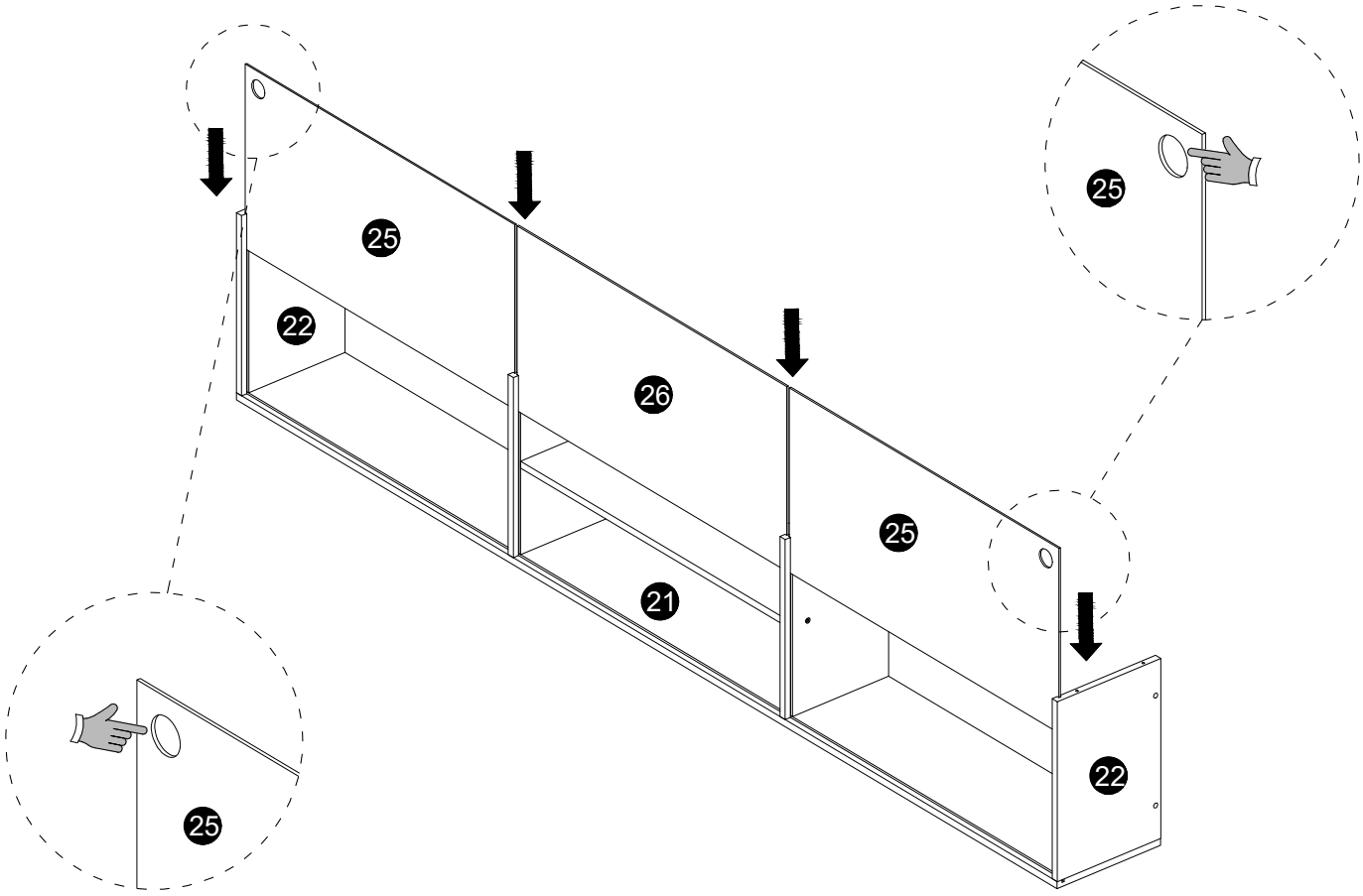

22

Unfold the light strip AA and stick it on the Velcro on the grooved side of No.20 part.

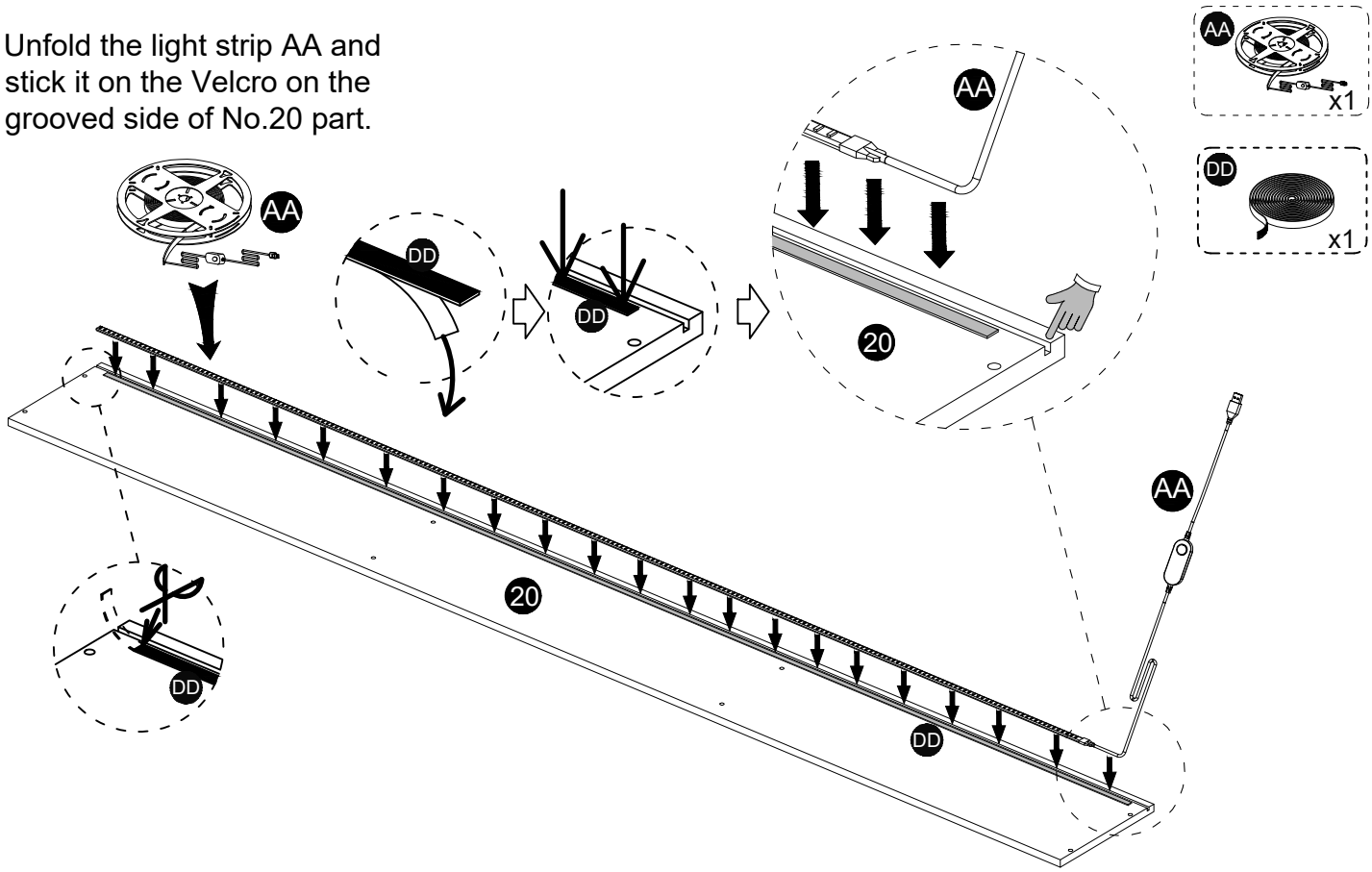

23

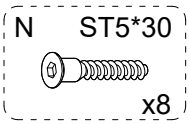

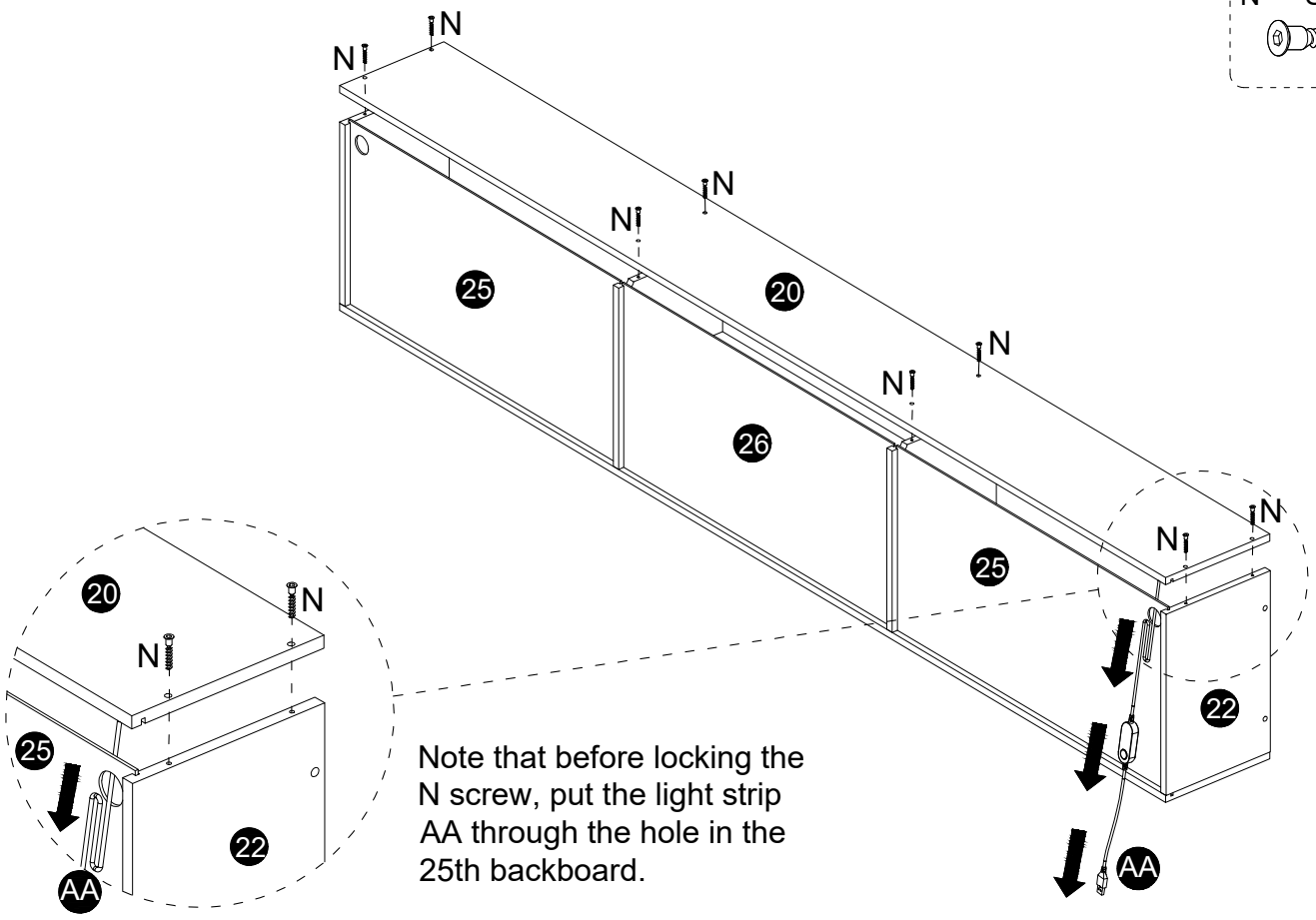

Note that before locking the N screw, put the light strip AA through the hole in the 25th backboard.

24

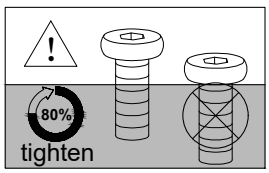

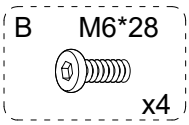

It needs at least two people to install.

25

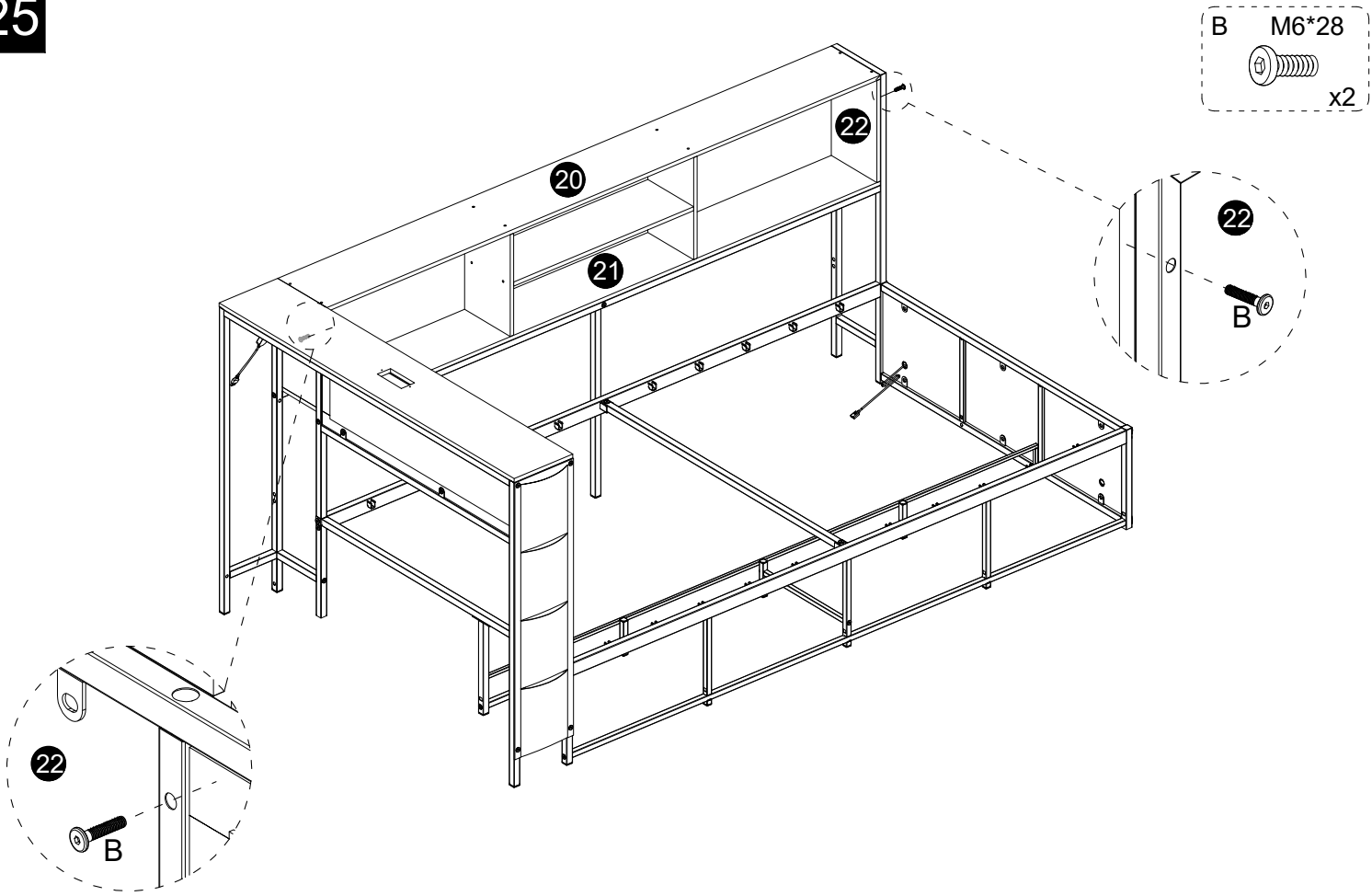

26

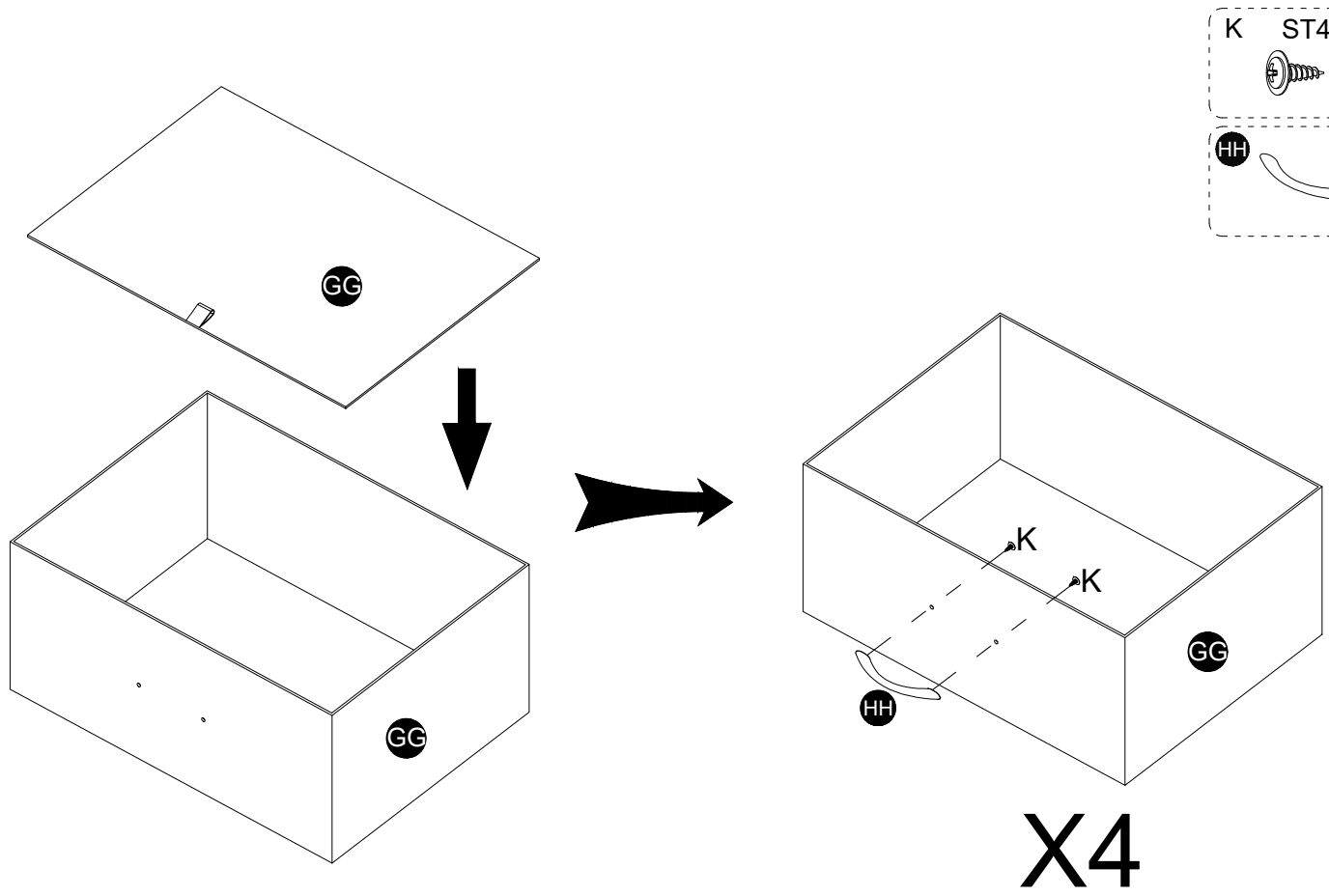

27

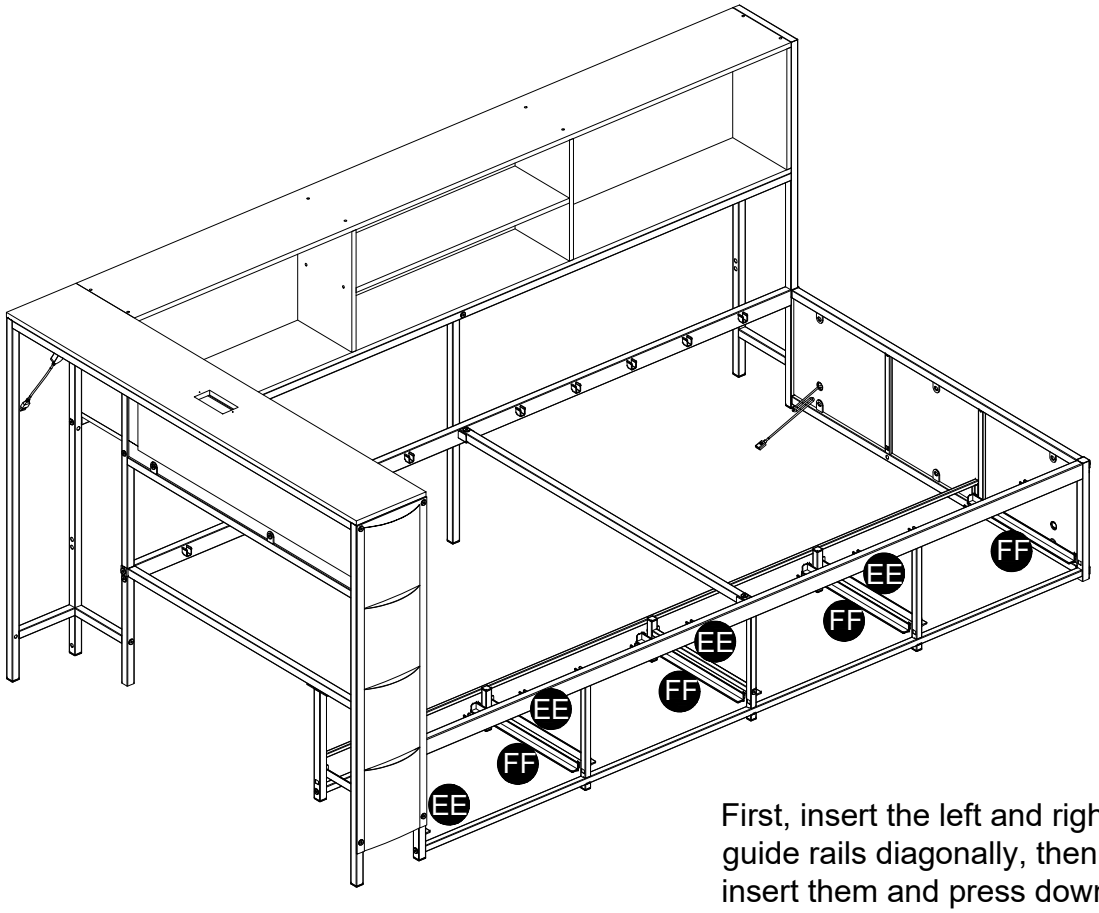

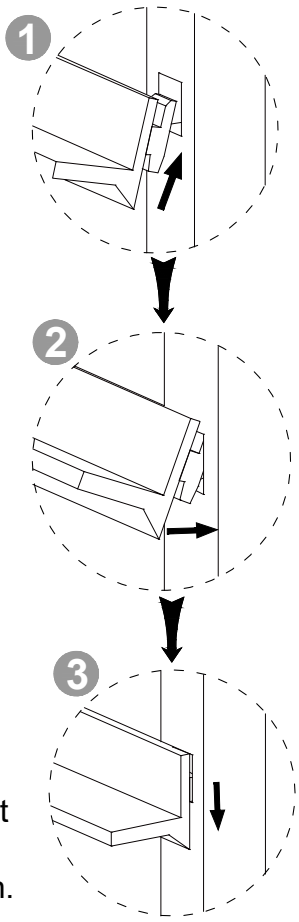

First, insert the left and right guide rails diagonally, then insert them and press down.

28

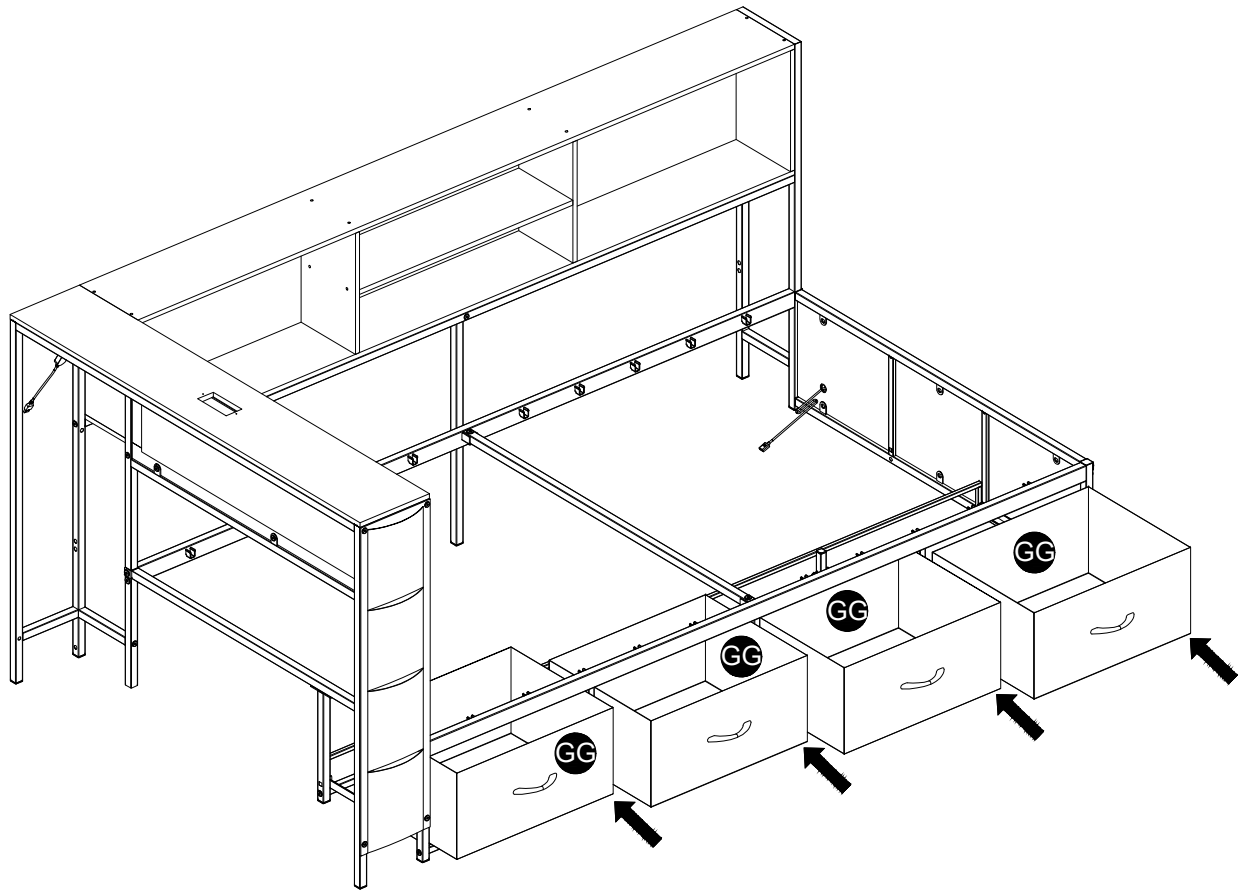

29

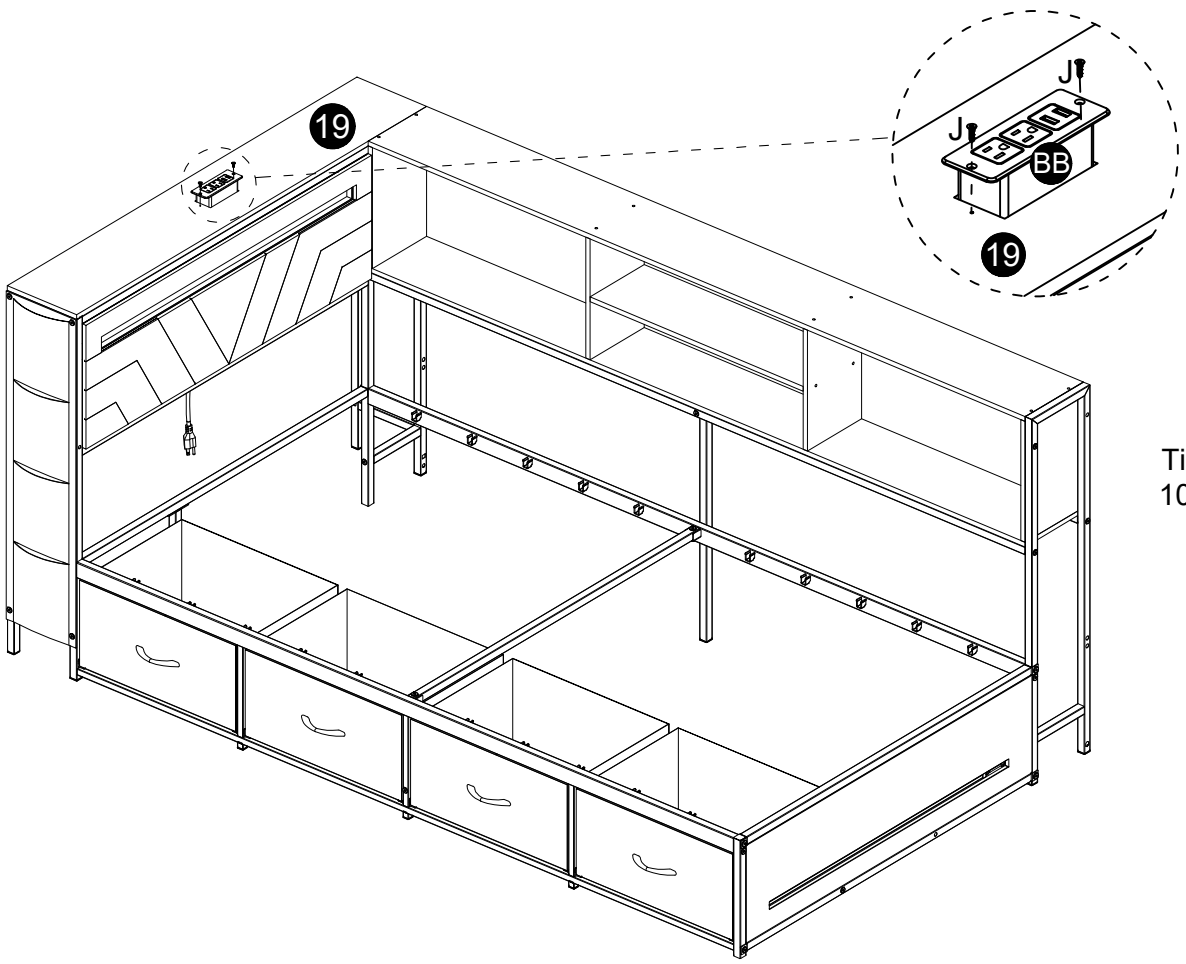

J ST3*12 x2

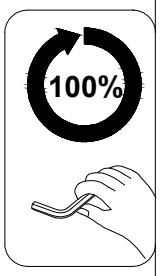

Tighten all screws to 100% after assembly.

30

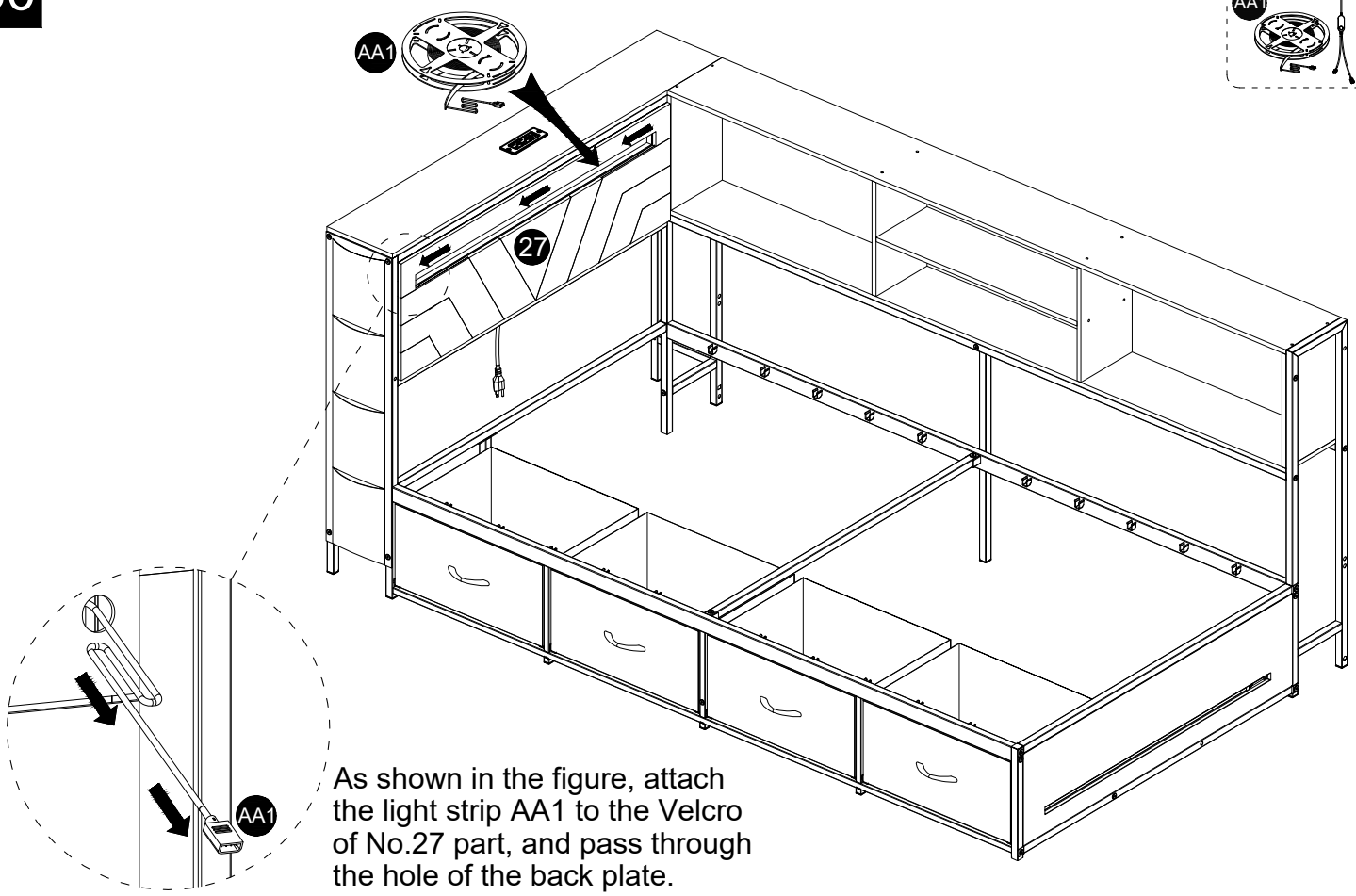

AA1 x1

As shown in the figure, attach the light strip AA1 to the Velcro of No.27 part, and pass through the hole of the back plate.

31

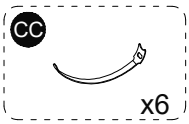

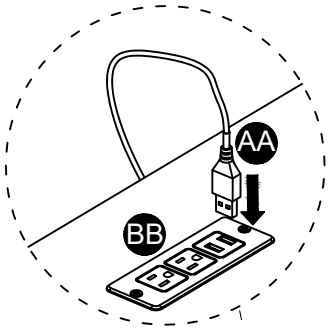

Insert the USB plug of LED strip AA into the USB port of socket BB.

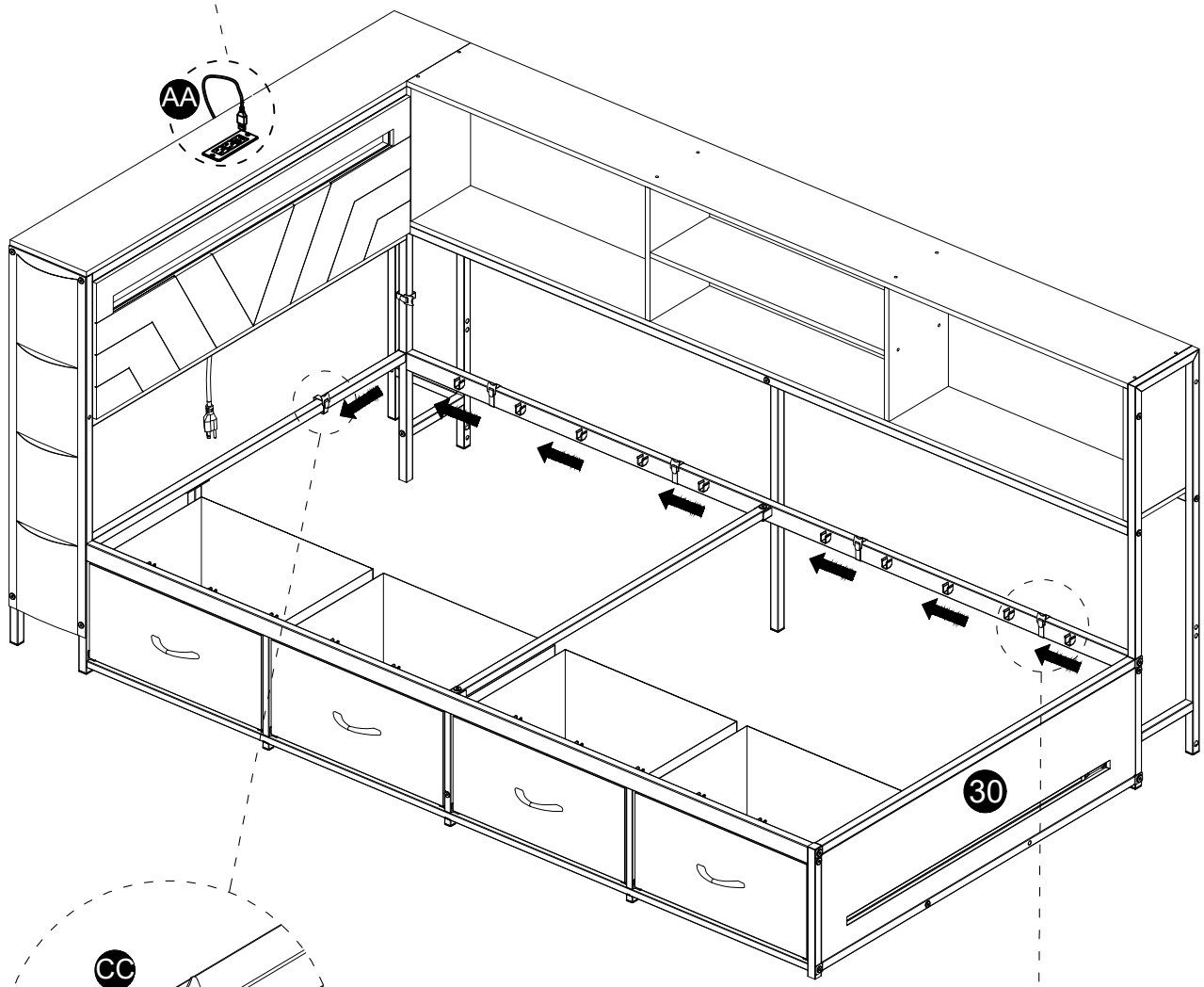

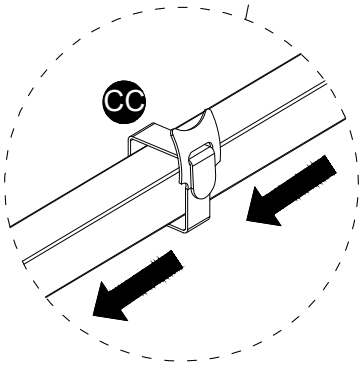

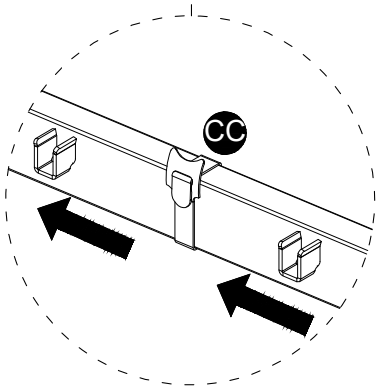

As shown in the figure, first organize the light strip line of part 30, then organize the light strips AA and AA1, and fix them tightly with zip ties CC.

32

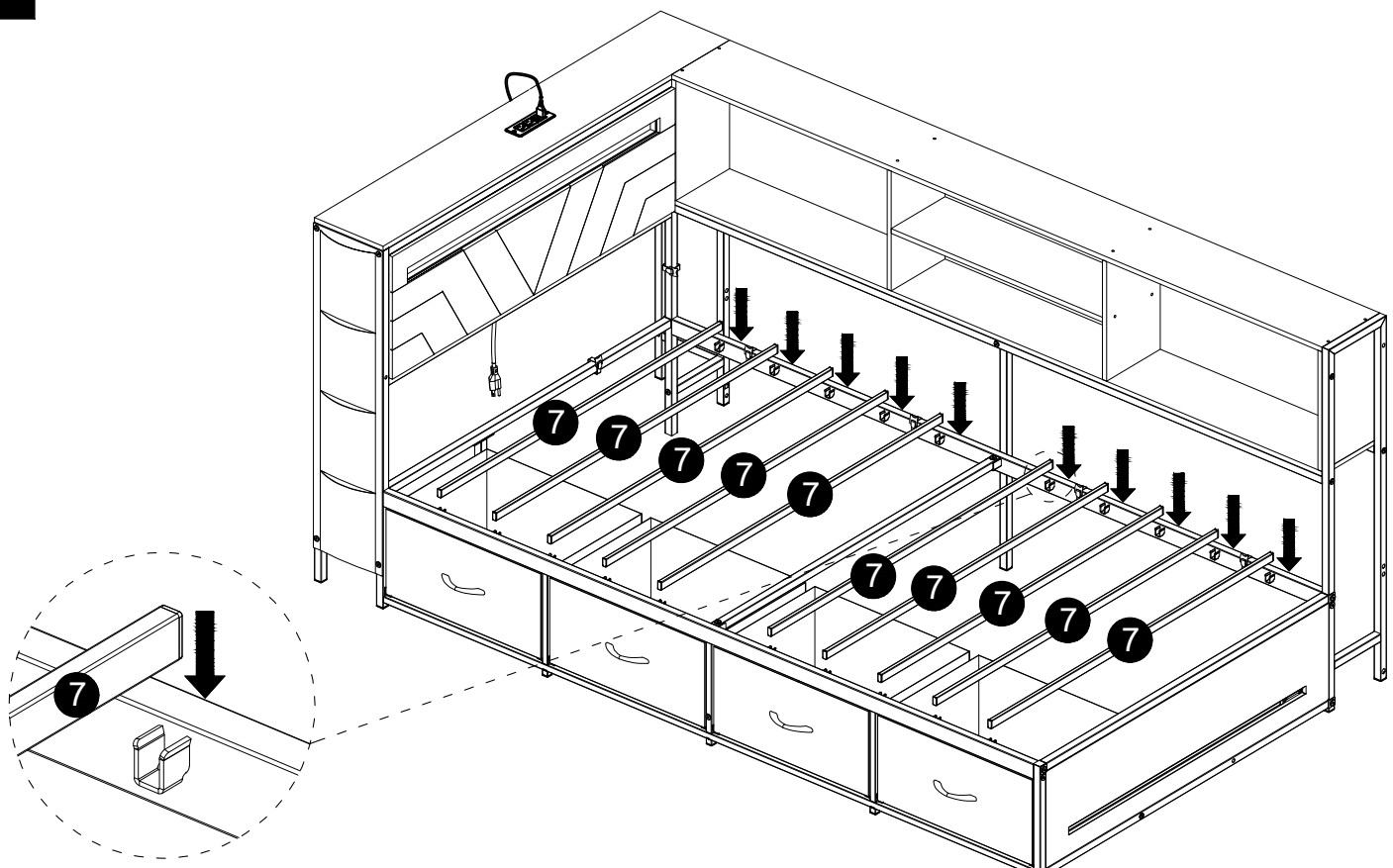

Press down to lock

33

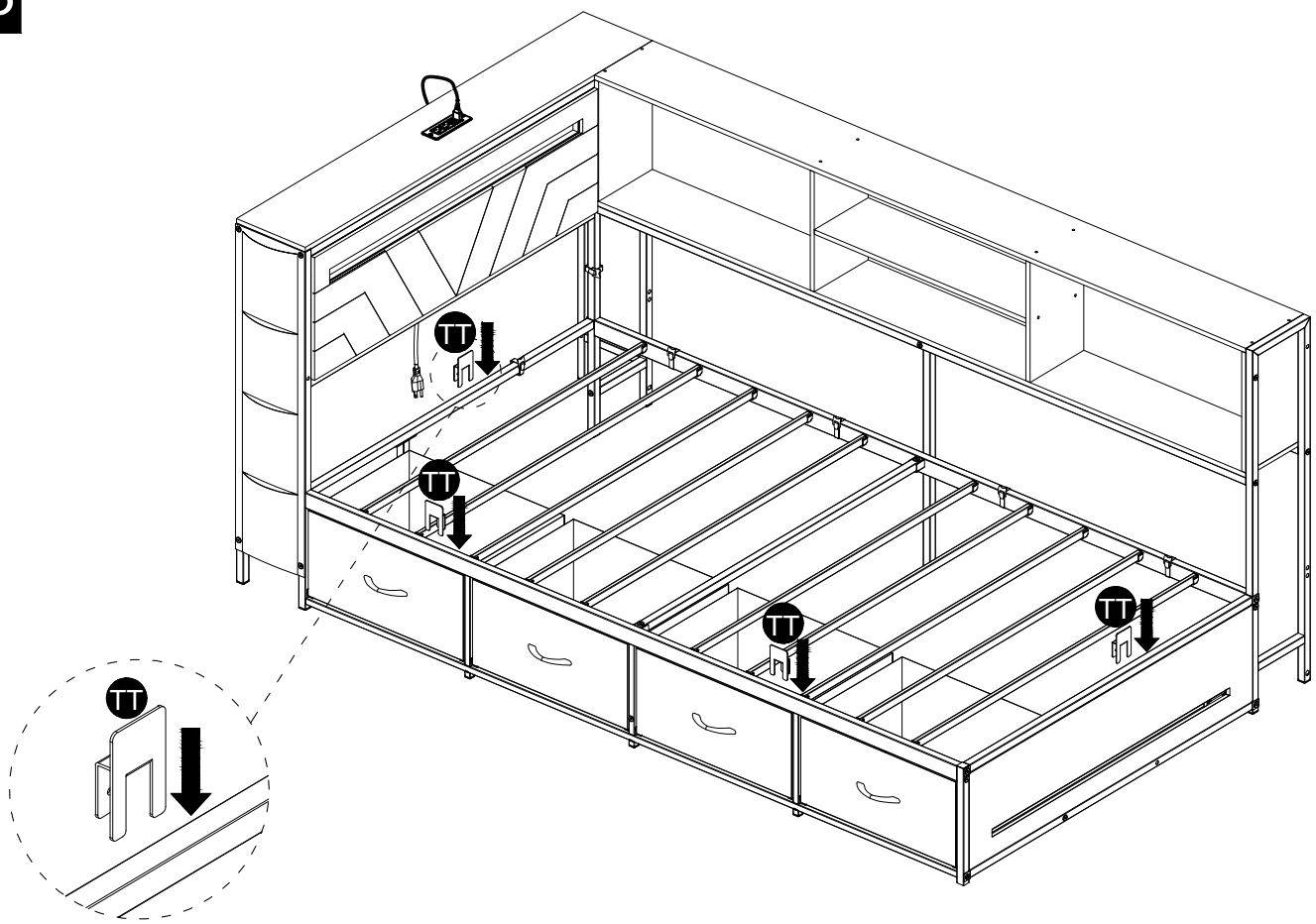

34

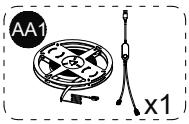

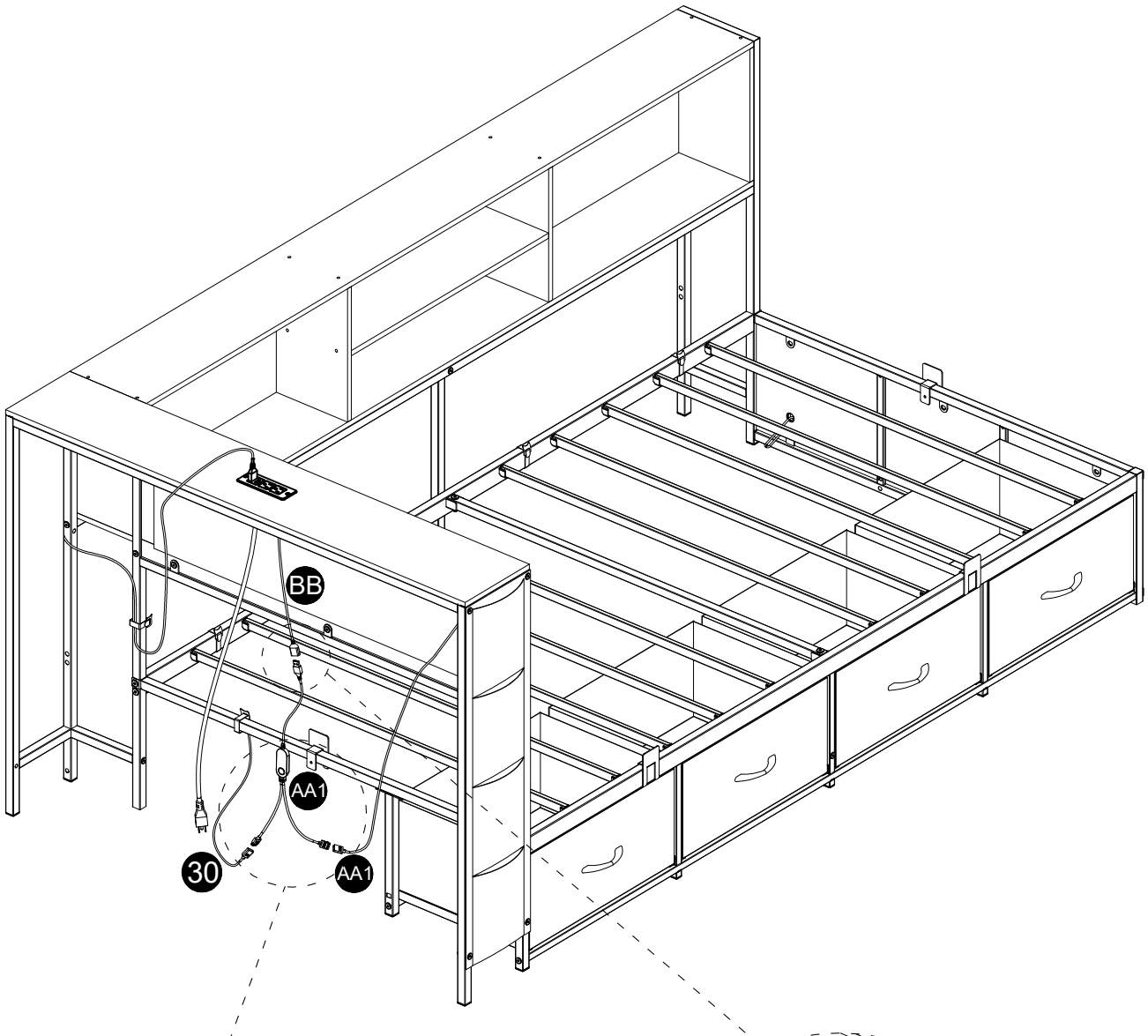

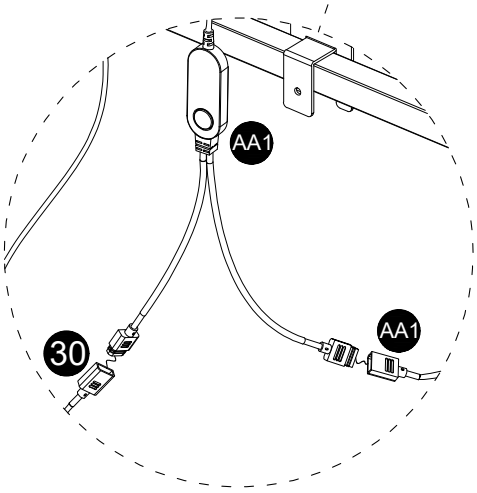

Insert the light strip of part 30 and the plug of light strip AA1 into the interface of LED controller AA1.

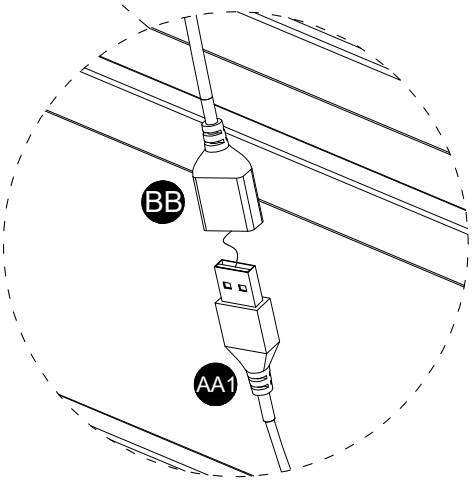

Insert the connector of LED controller AA1 into the expansion port of power socket BB.

35

FINISH

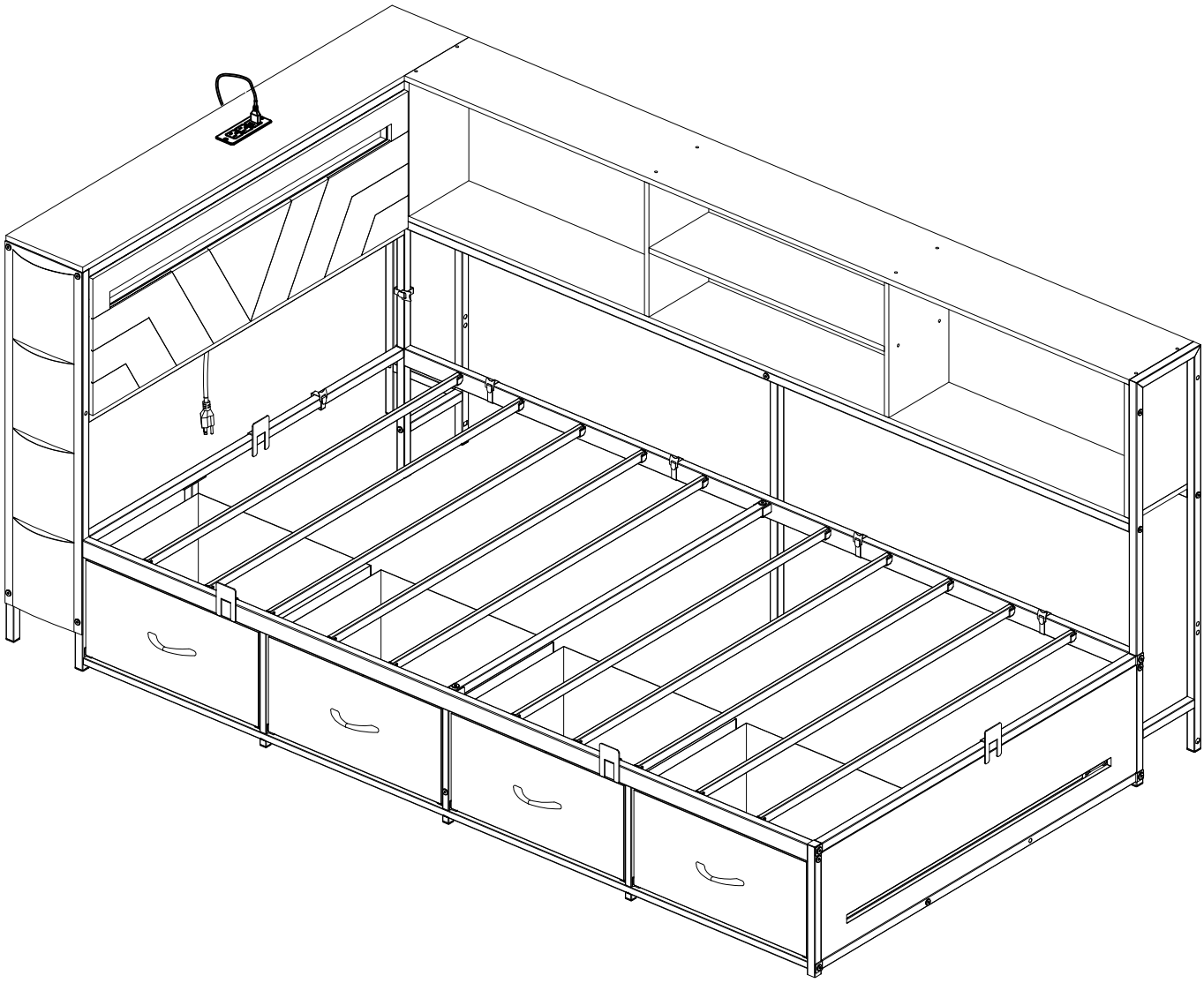

There are 2 ways to install this bed, each with different steps.
The following is the second way, please assemble according to the assembly steps.

Type 2: Please refer to Step 36 ~ Step 70.

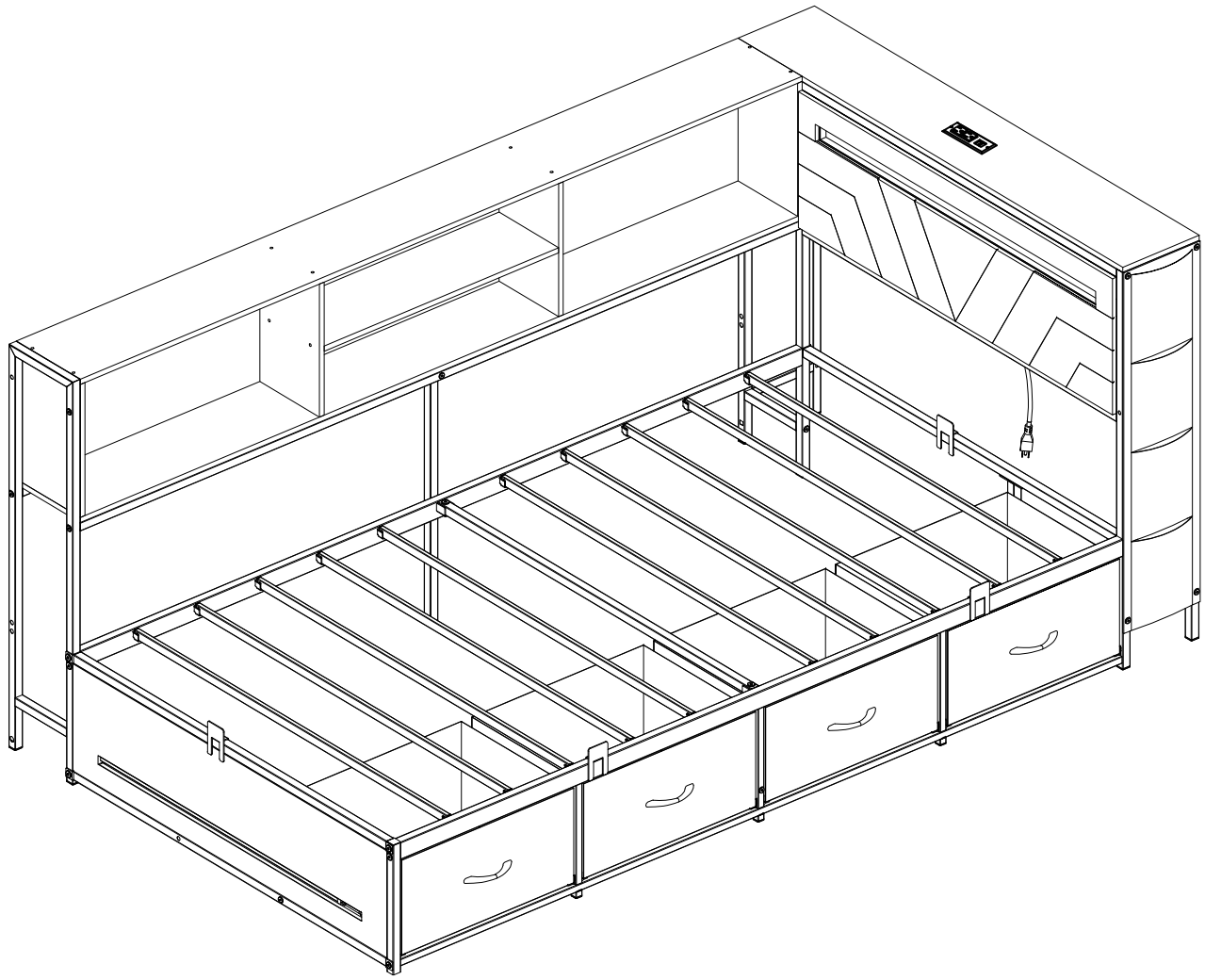

36

D M6*40 x2

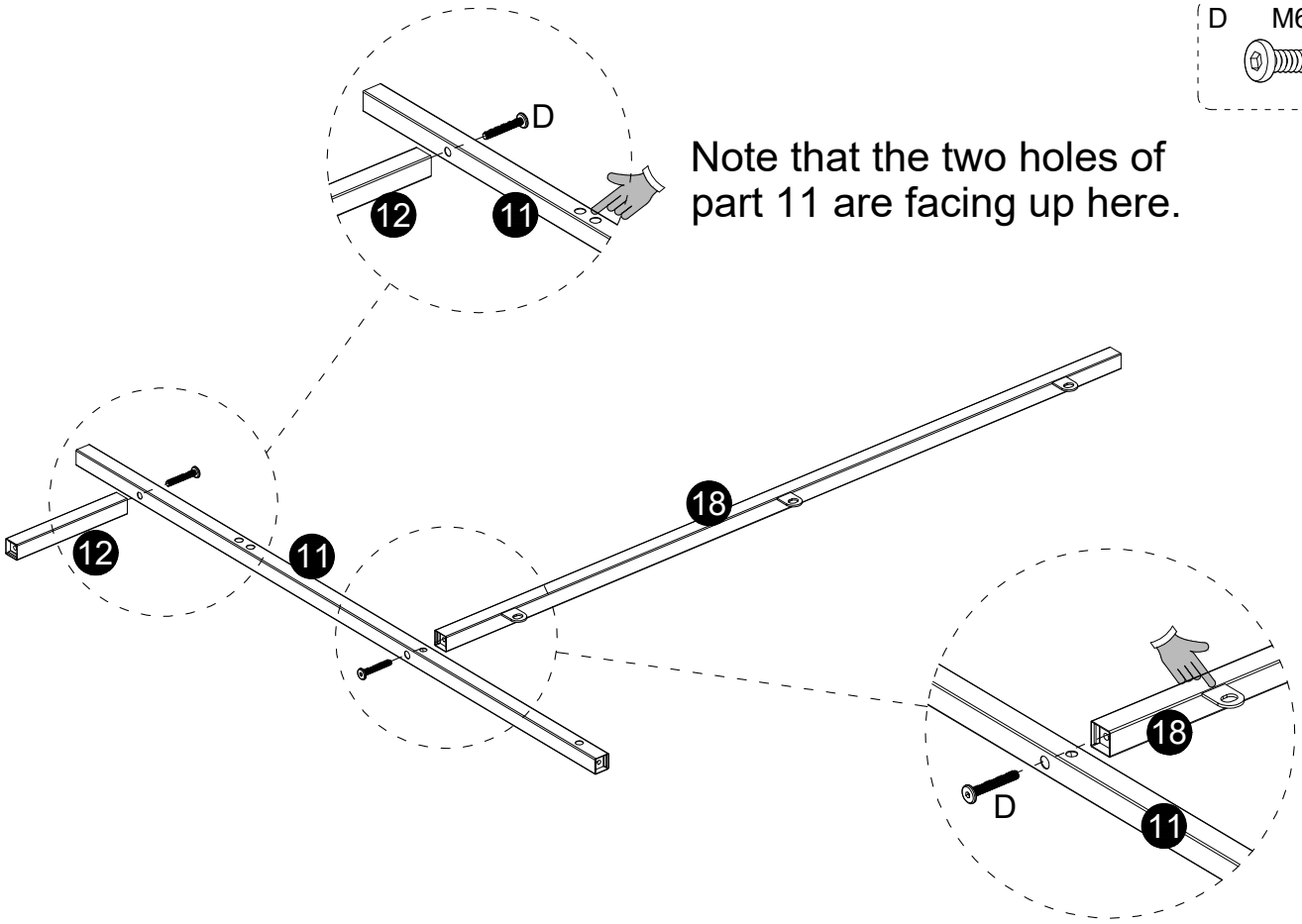

Note that the two holes of part 11 are facing up here.

37

C M6*30 x1

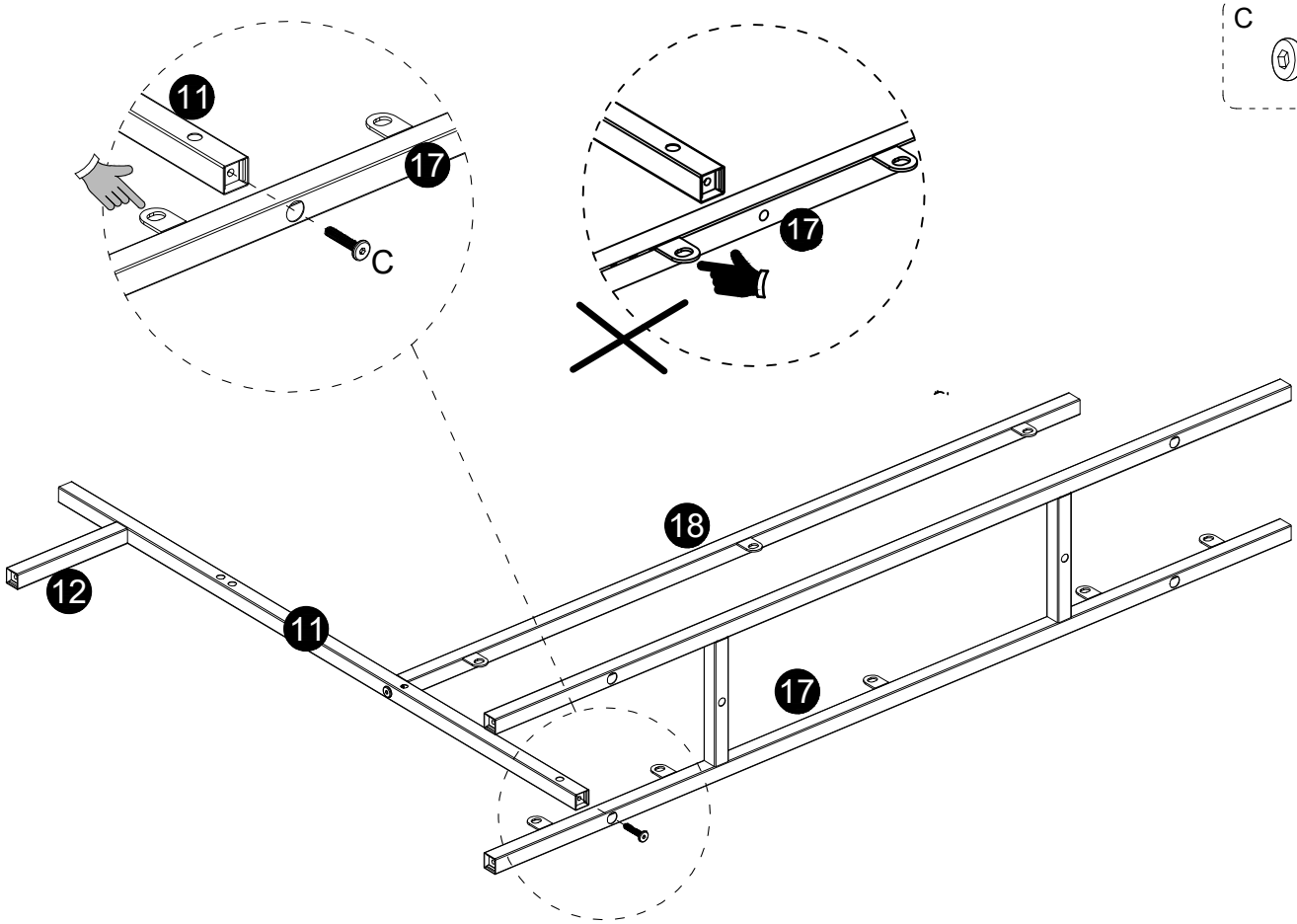

38

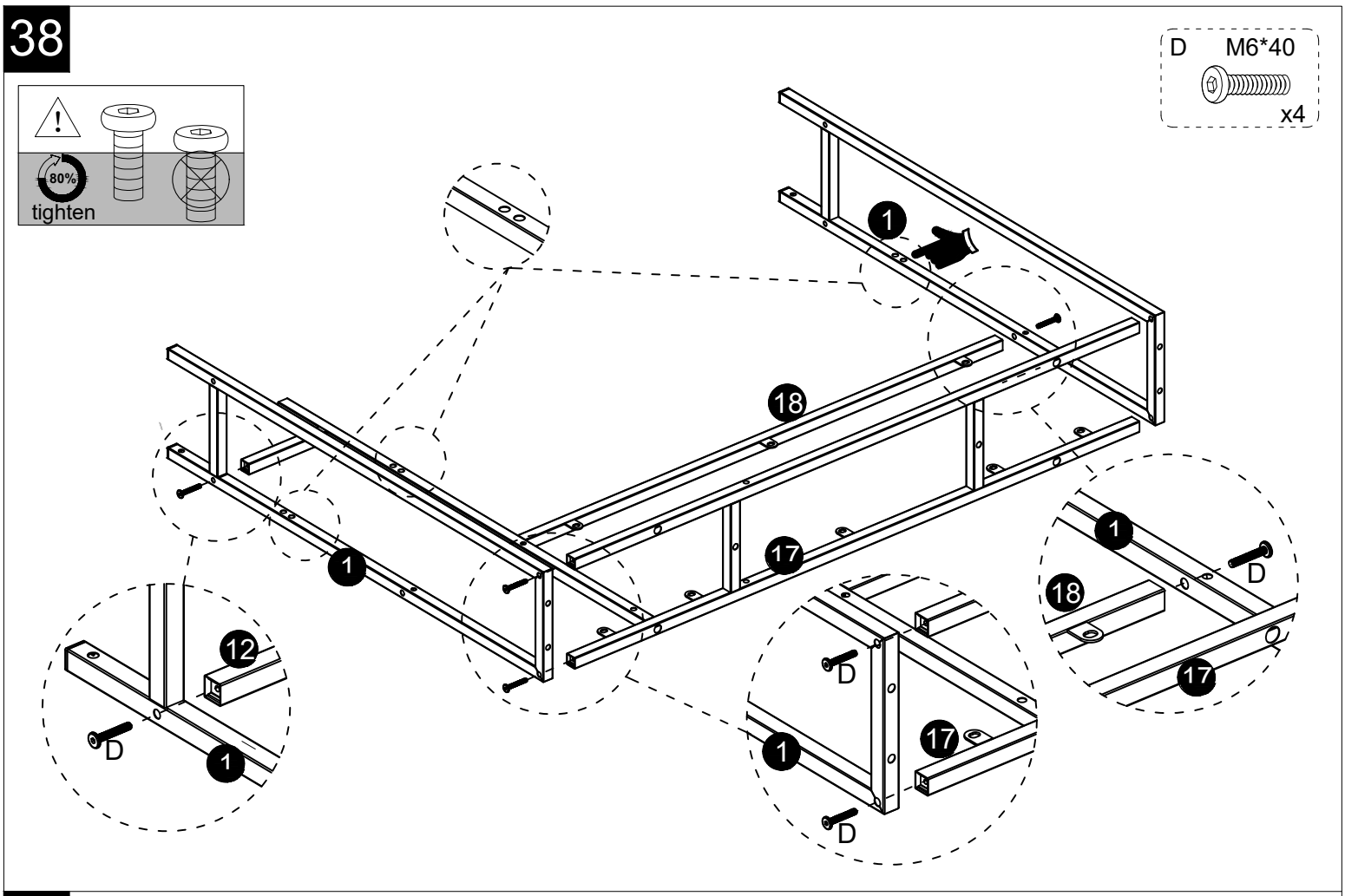
D M6*40
x4
80%
tighten
1
18
17
12
D

39

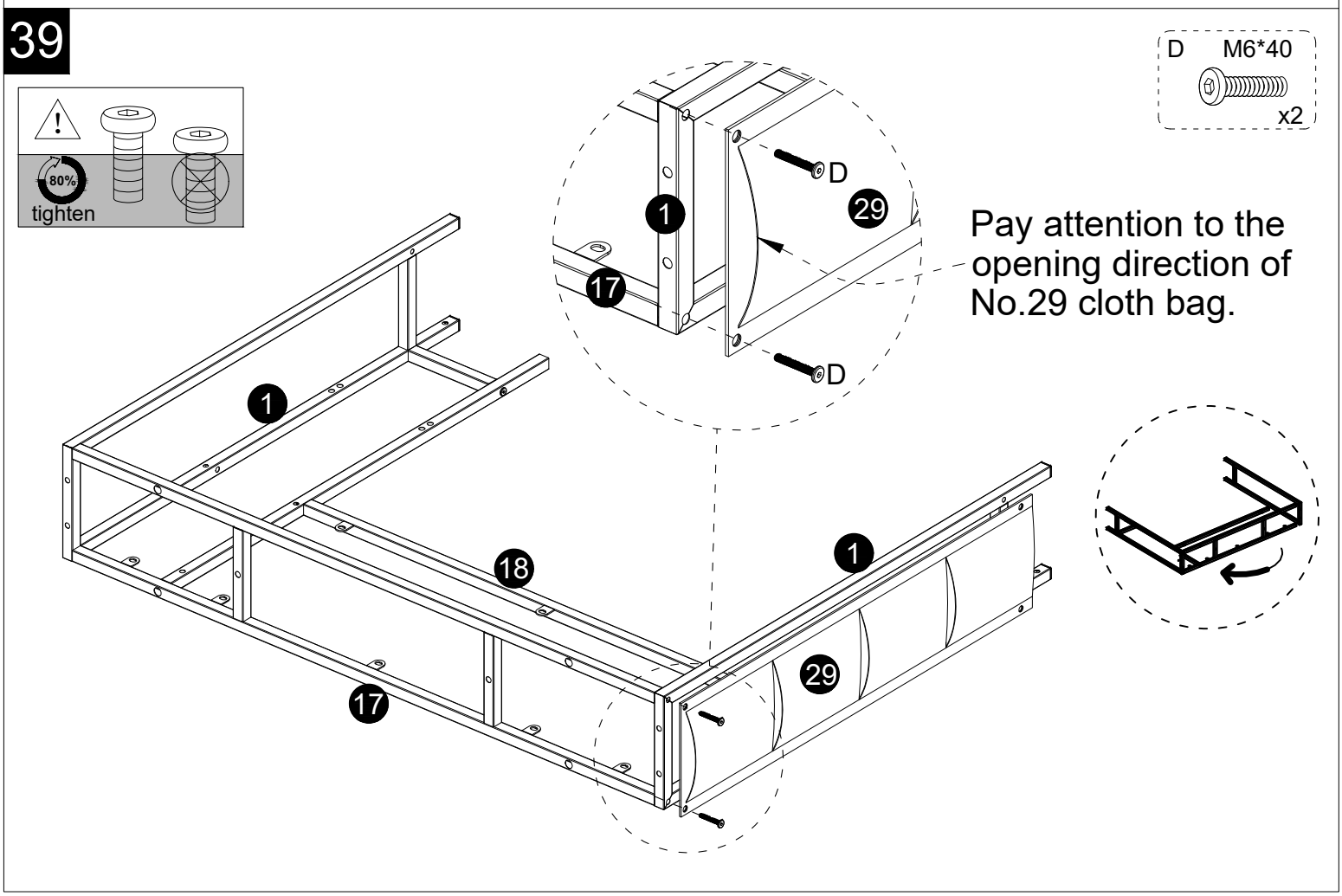
D M6*40
x2
80%
tighten
1
17
29
D
18
Pay attention to the opening direction of No.29 cloth bag.

40

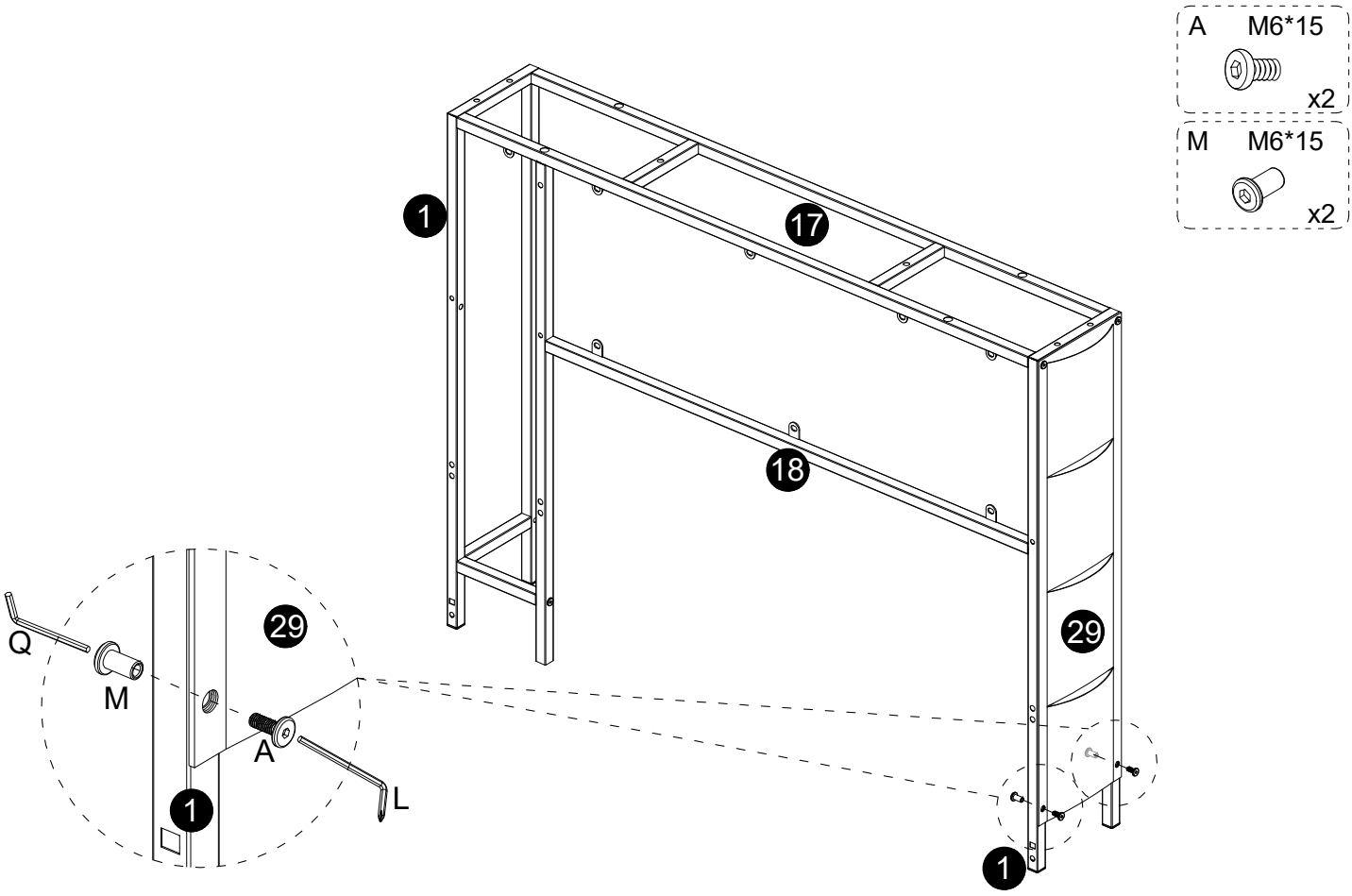
A M6*15
x2
M M6*15
x2
1
17
18
29
Q
M
A
L
29
1
1

41

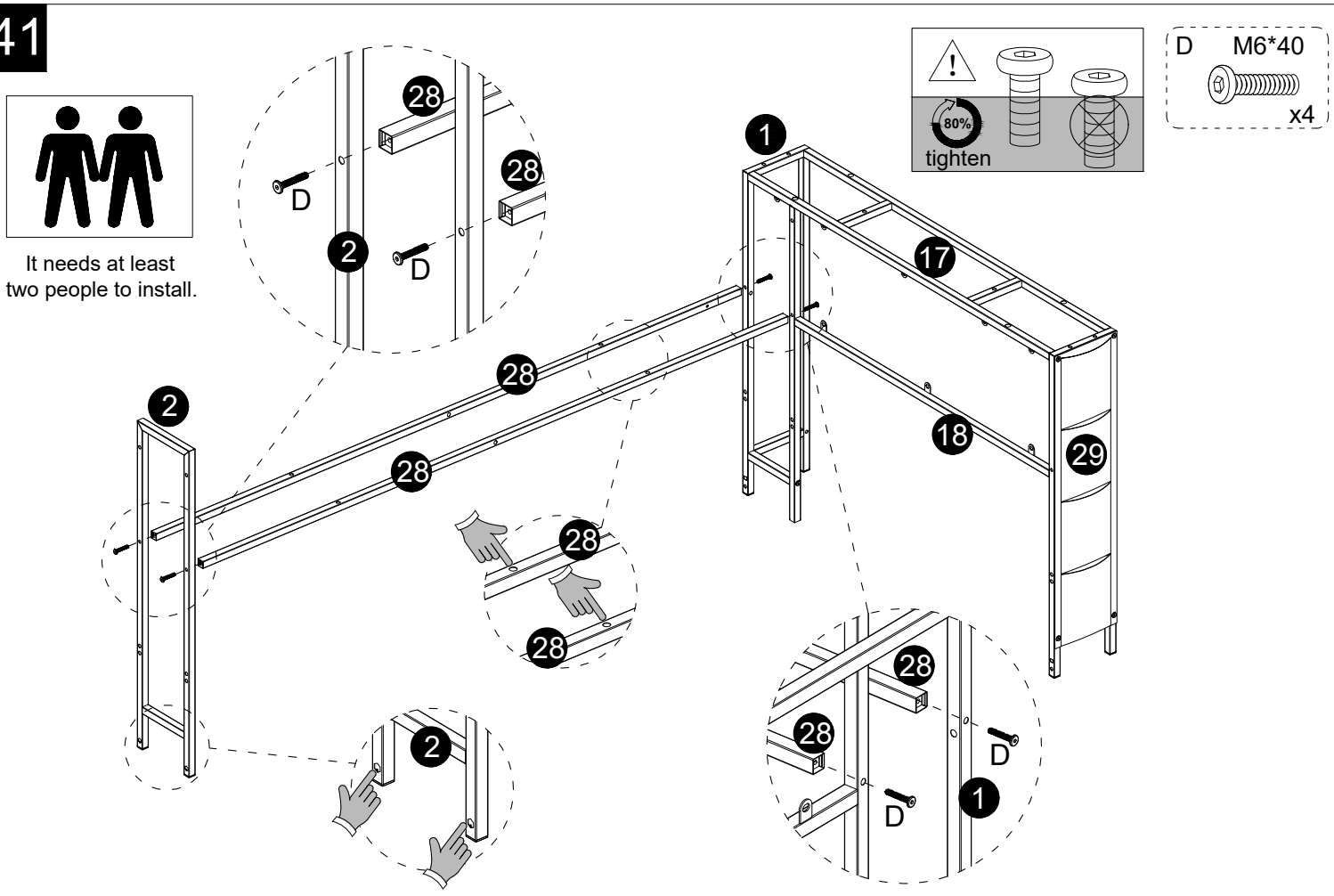
It needs at least
two people to install.
D M6*40
x4
80%
tighten
28
28
D
2
D
1
17
18
29
28
2
28
28
28
2
28
28
D
D
1

42

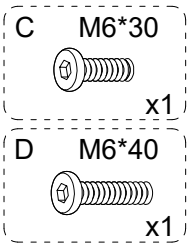

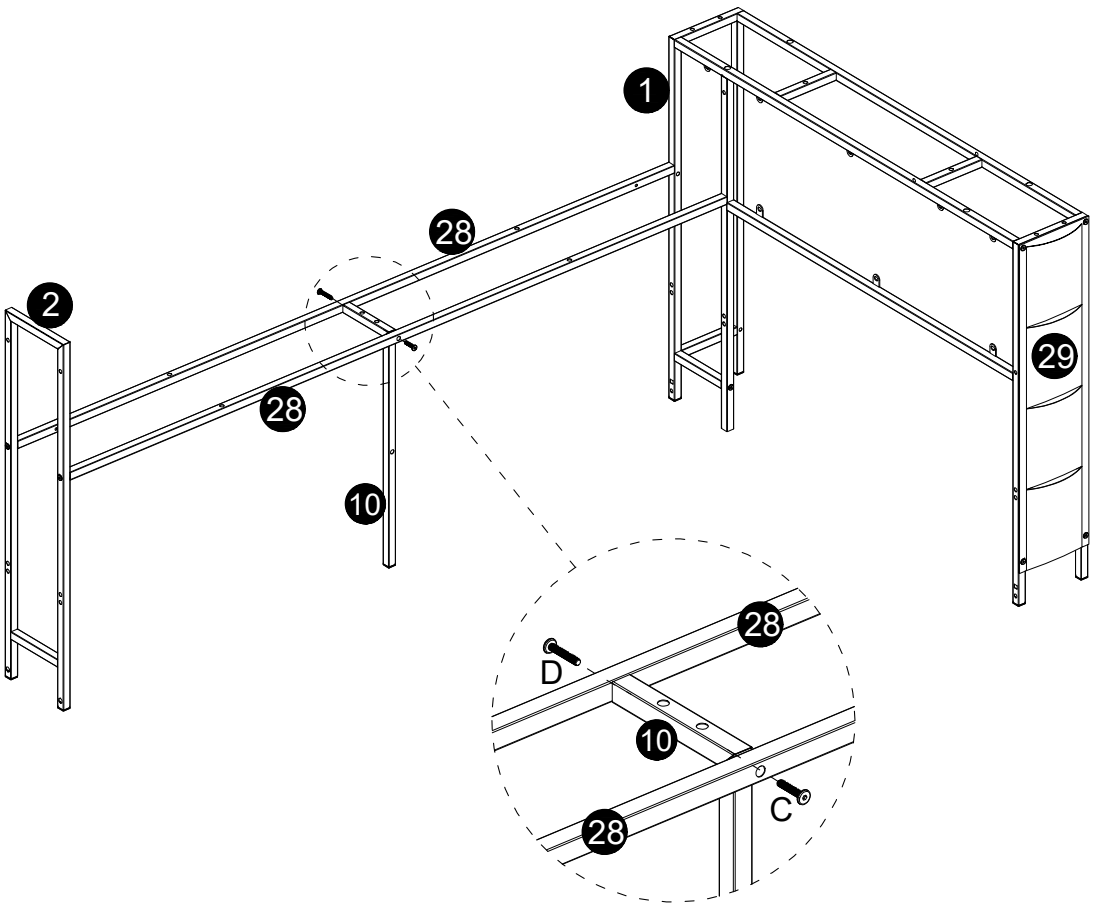

43

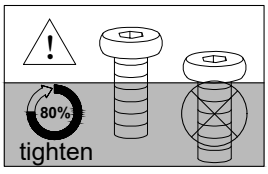

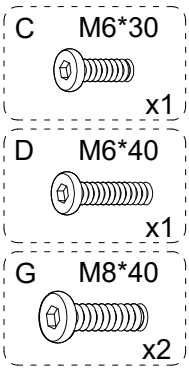

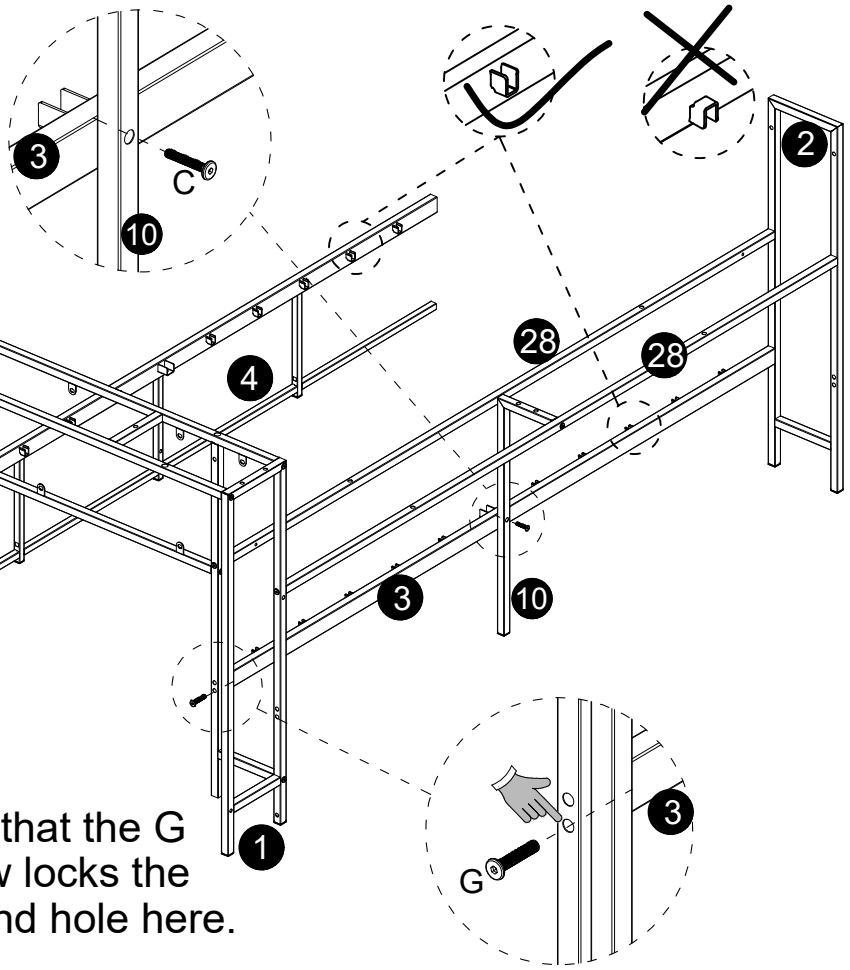

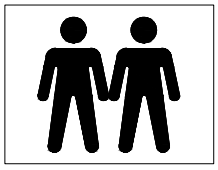

It needs at least two people to install.

44

A M6*15 x2

Pay attention to the orientation of the iron sheet here in Part 5.

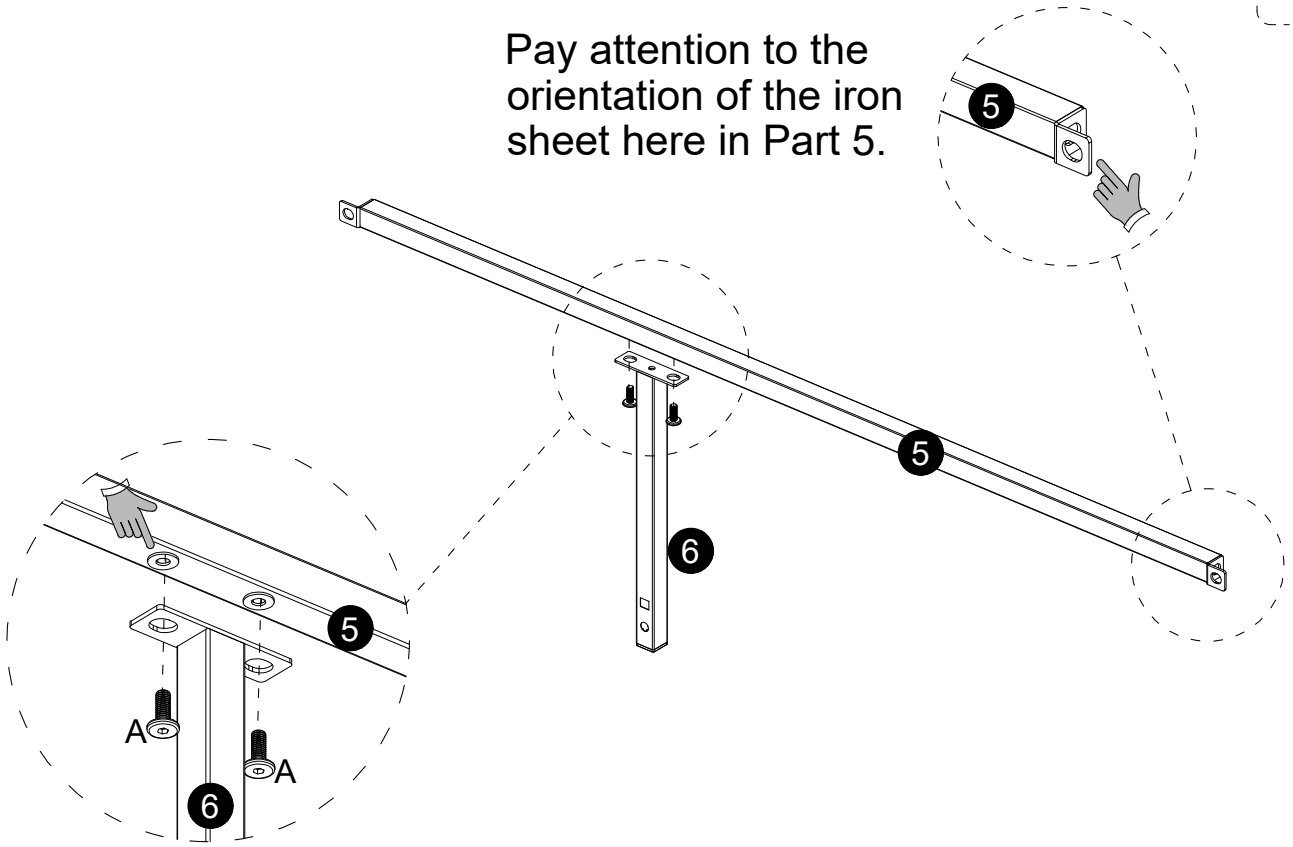

45

G M8*40 x2

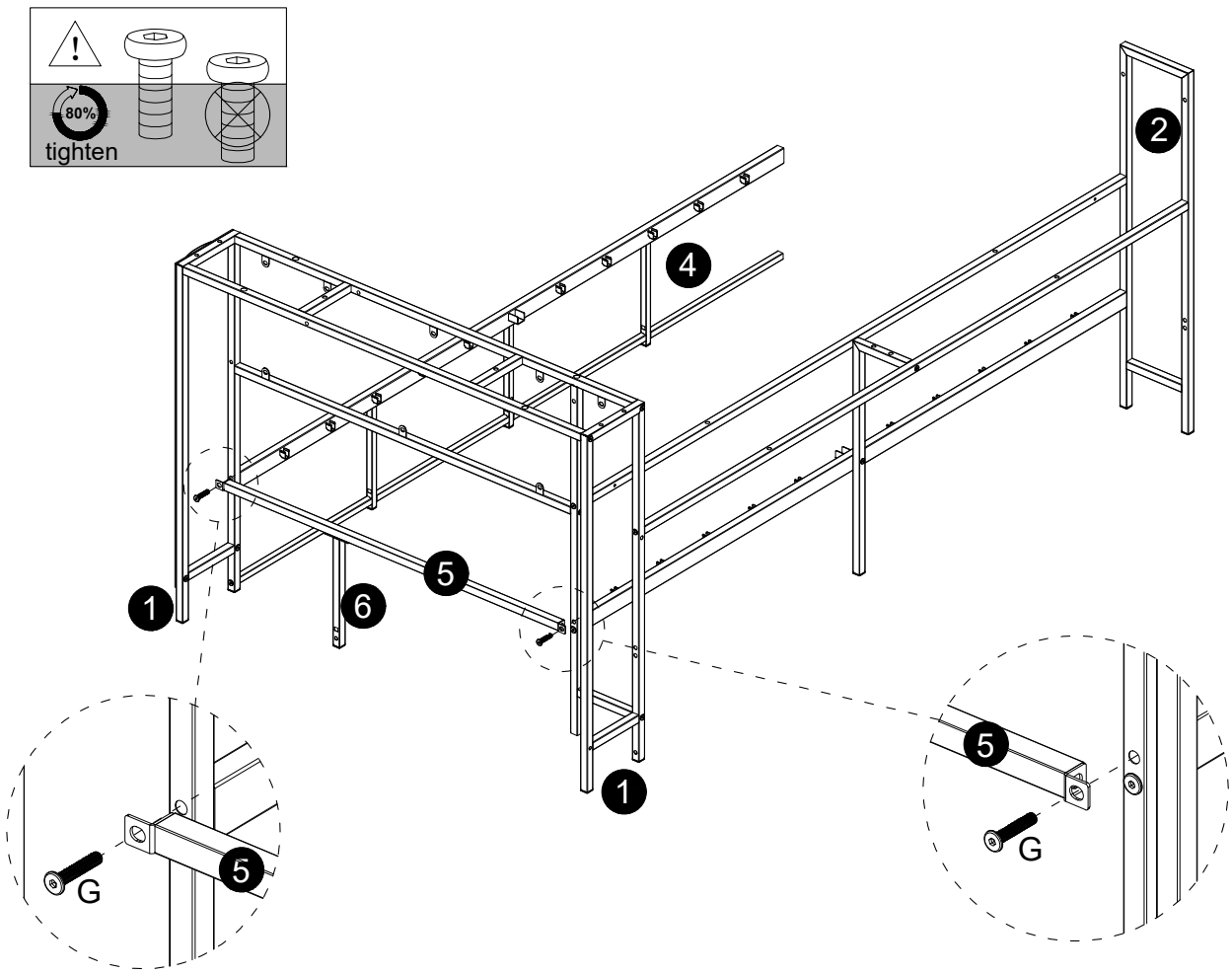

46

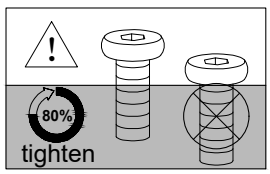
80%
tighten

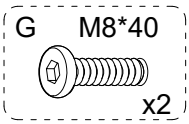
G M8*40
x2

1
2
3
4
29
13
G

47

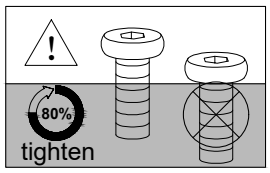
80%
tighten

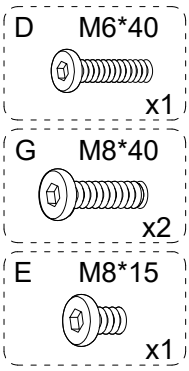
D M6*40
x1
G M8*40
x2
E M8*15
x1

1
2
3
4
29
30
13
G
E
D

48

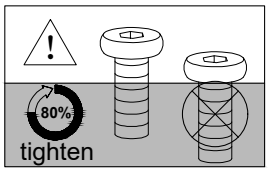
80%
tighten

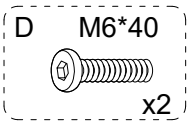
D M6*40
x2

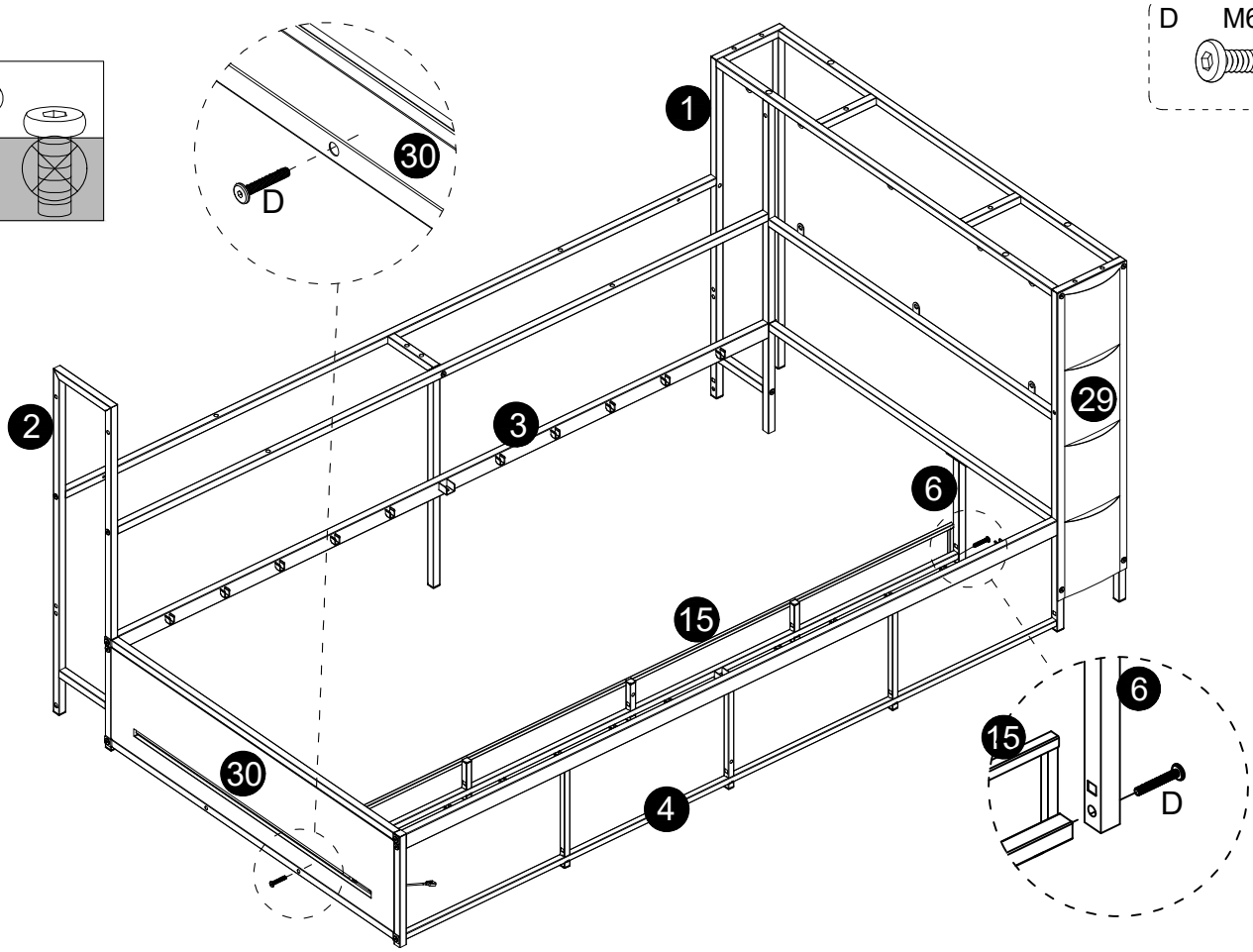
30
D
1
2
3
29
6
15
30
4
6
15
D

49

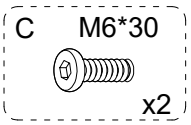
C M6*30
x2

31
C
15
1
2
29
15
31
30
4
31
C
4

50

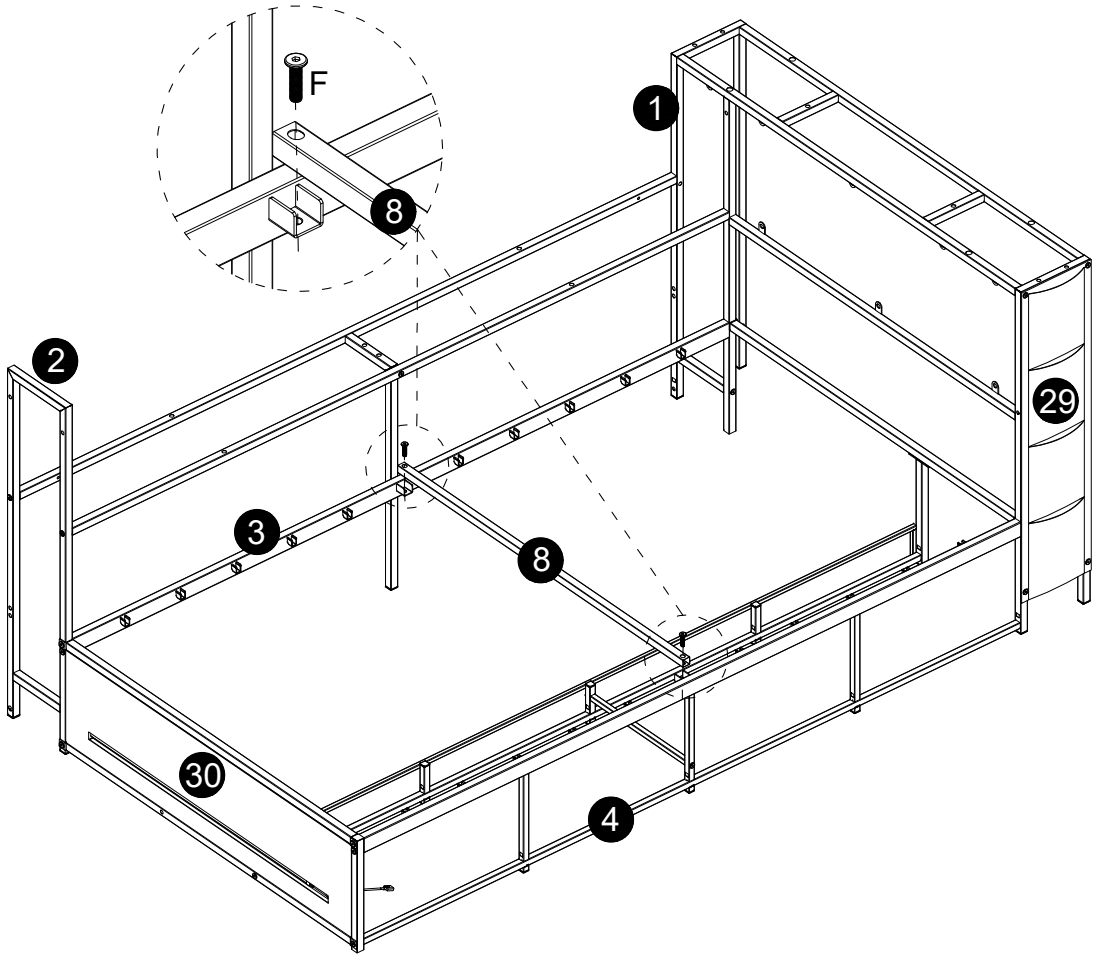

F M8*30 x2

51

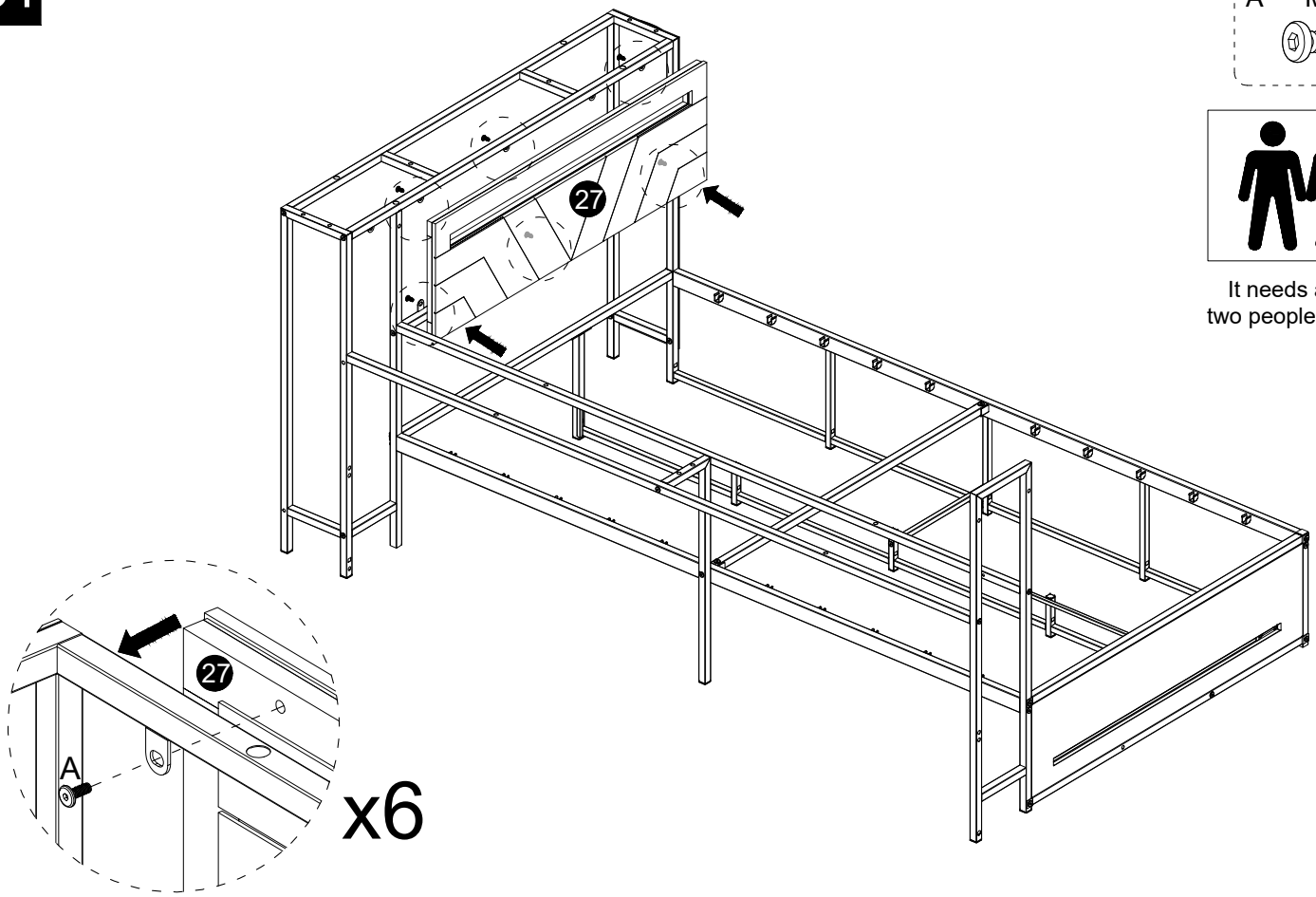

A M6*15 x6

It needs at least two people to install.

52

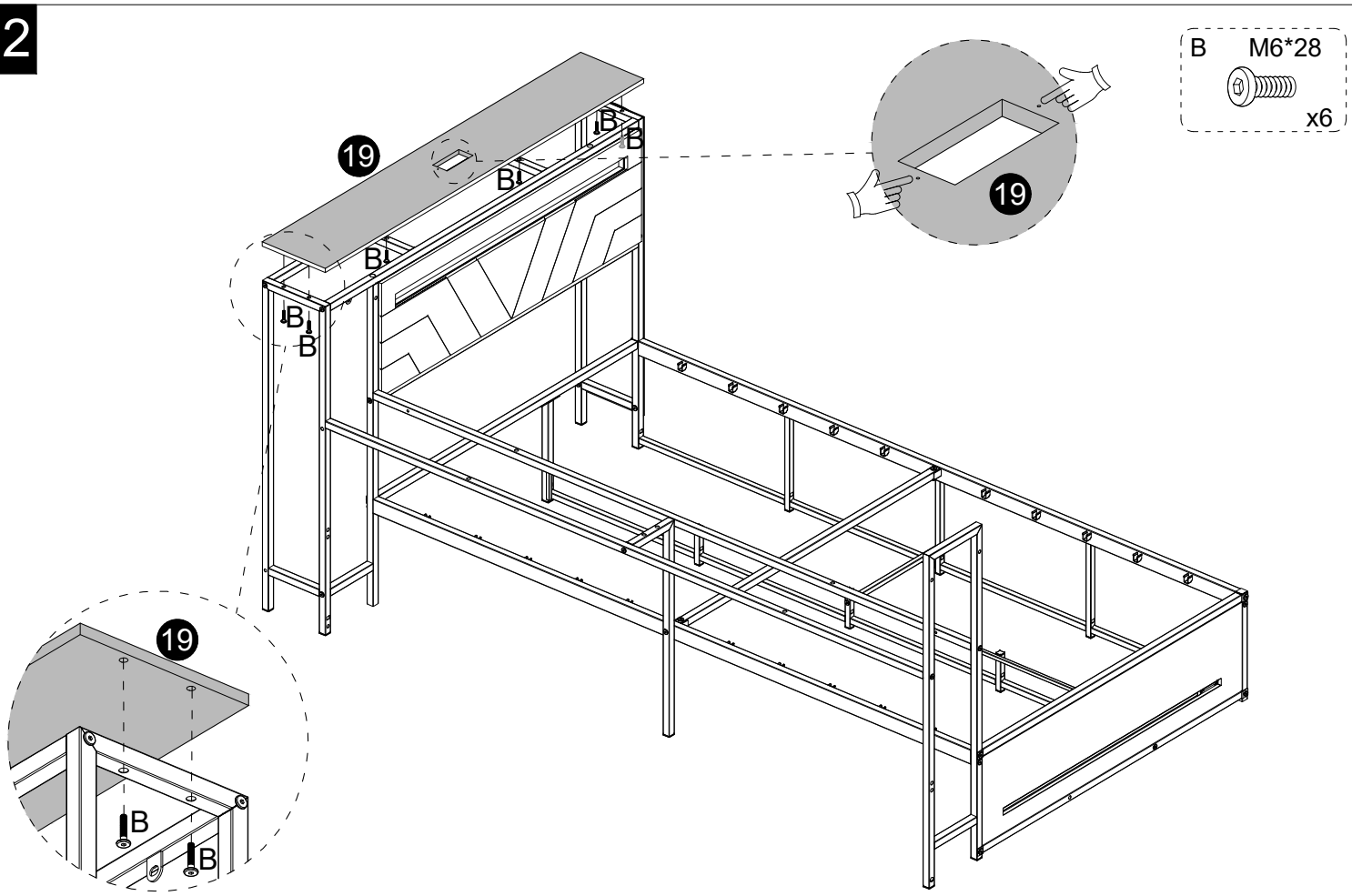

53

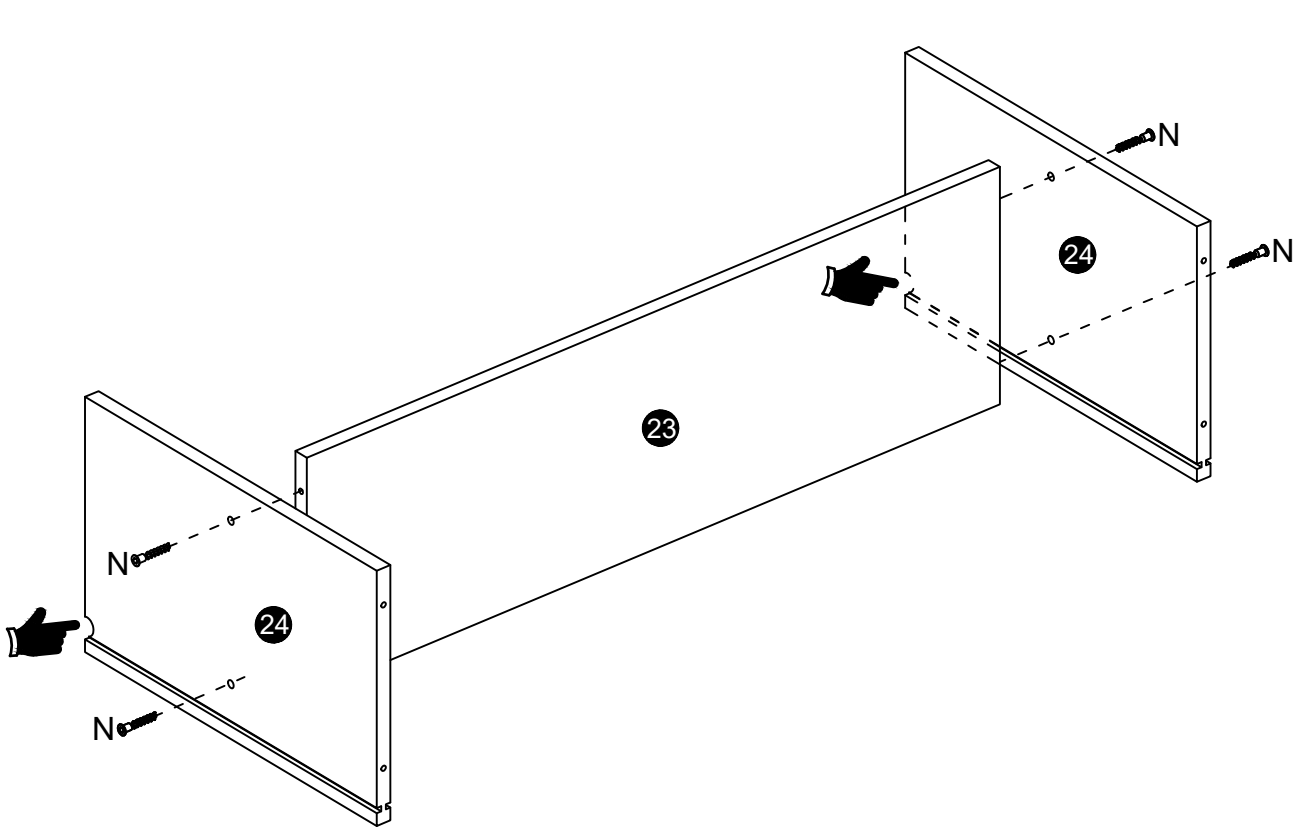

54

N ST5*30 x4

Pay attention to the notch direction of part 24 here.

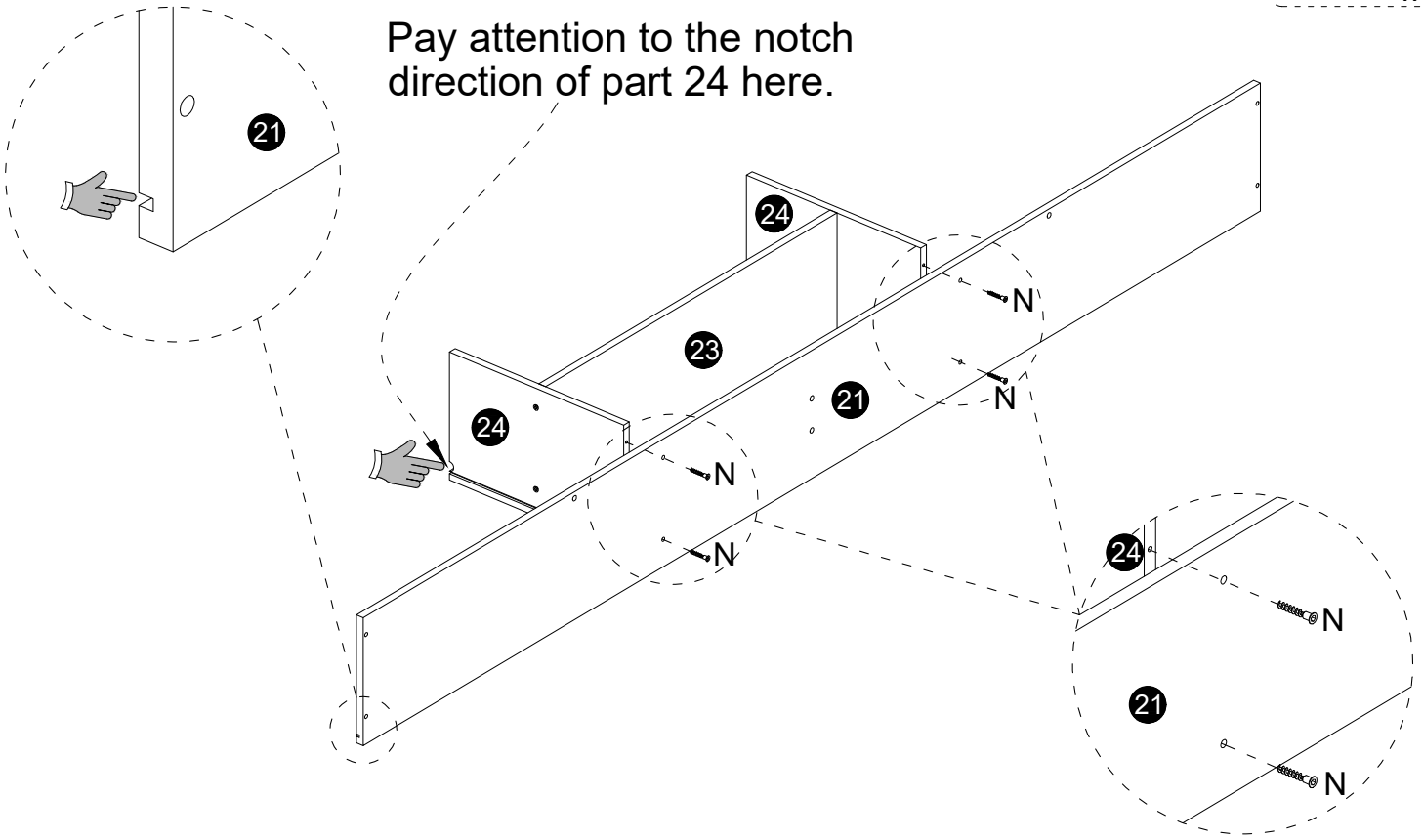

55

N ST5*30 x4

Note that the groove of part 22 is inward and the grooved side is downward.

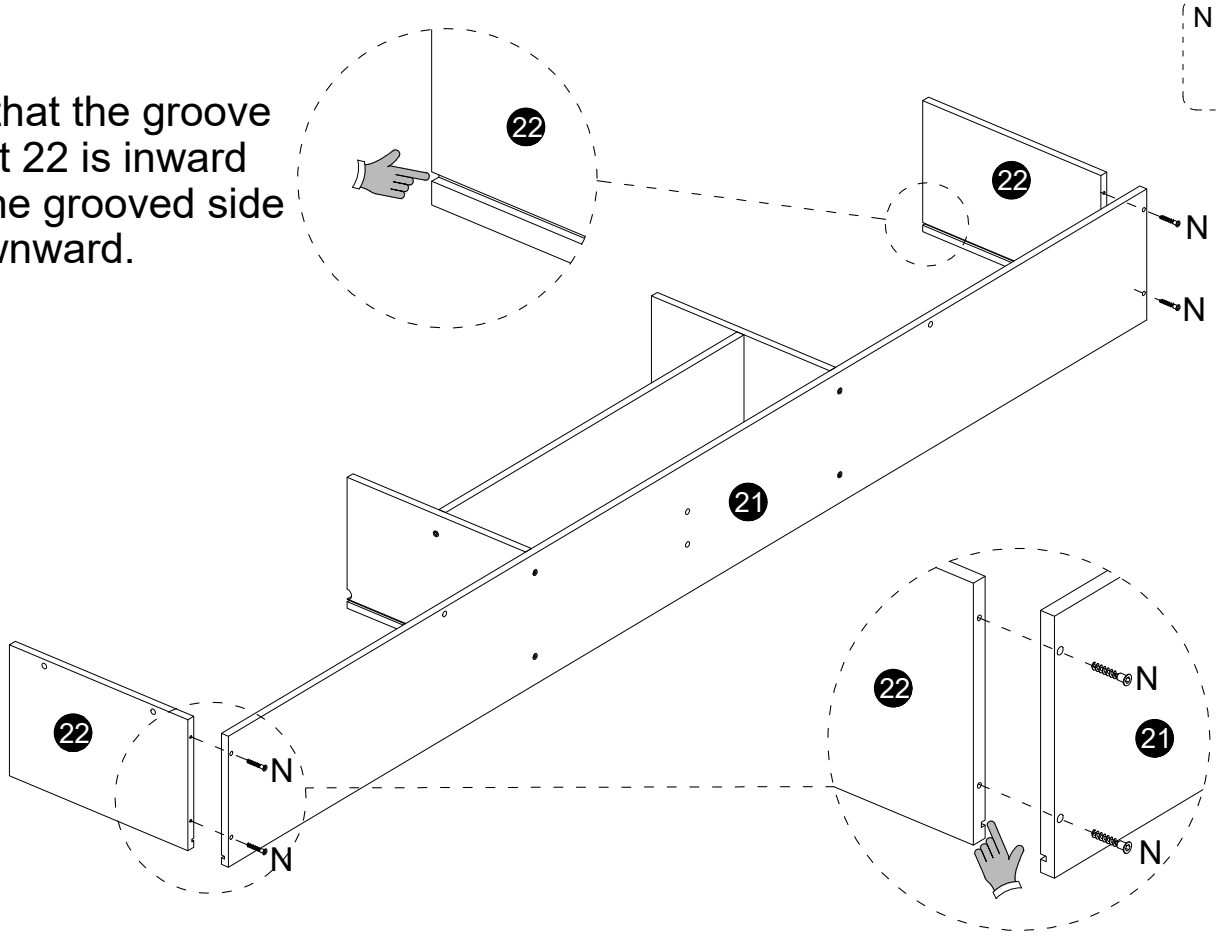

56

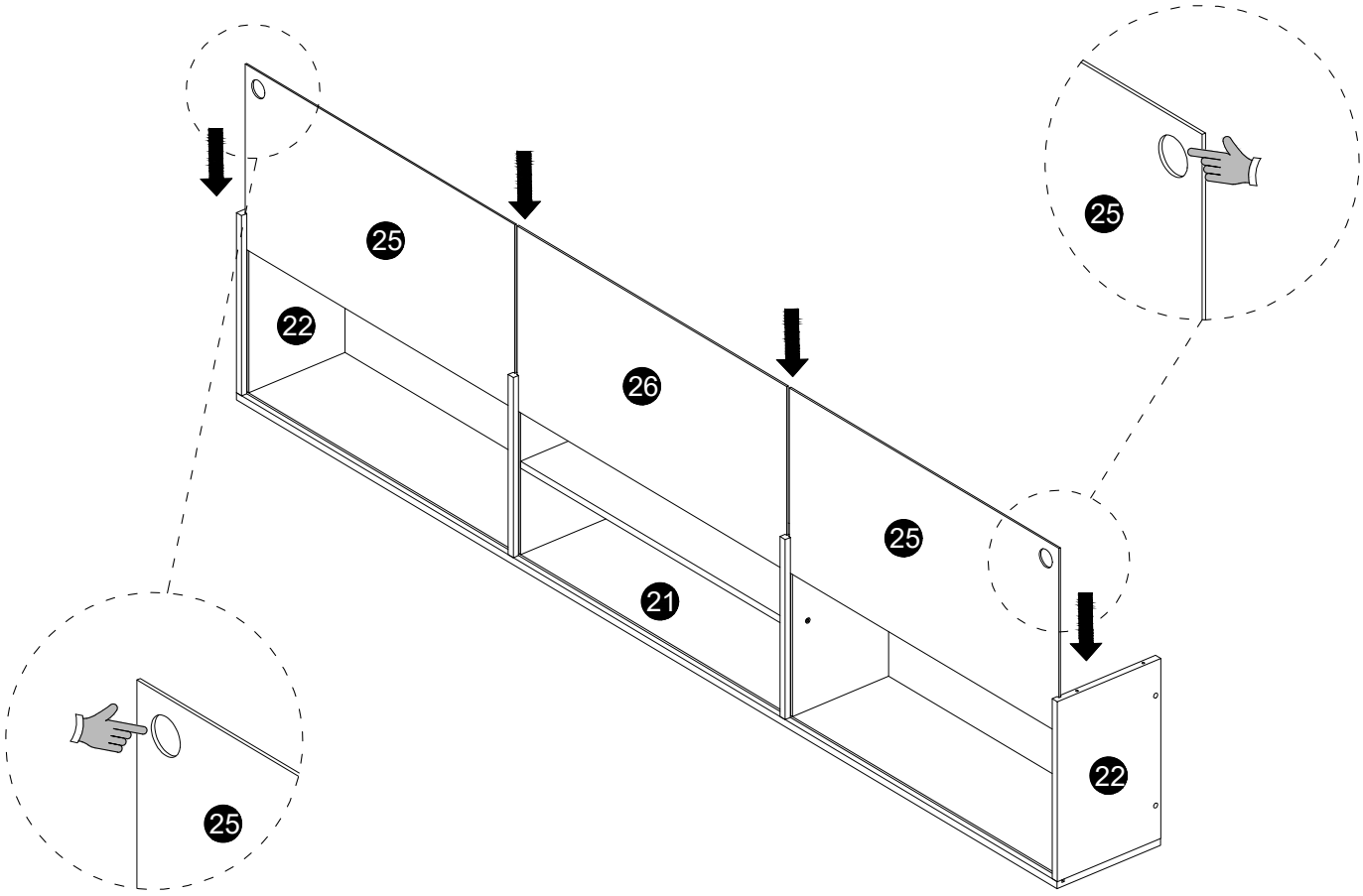

57

Unfold the light strip AA and stick it on the Velcro on the grooved side of No.20 part.

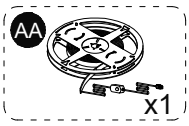

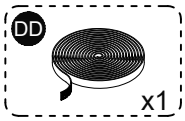

58

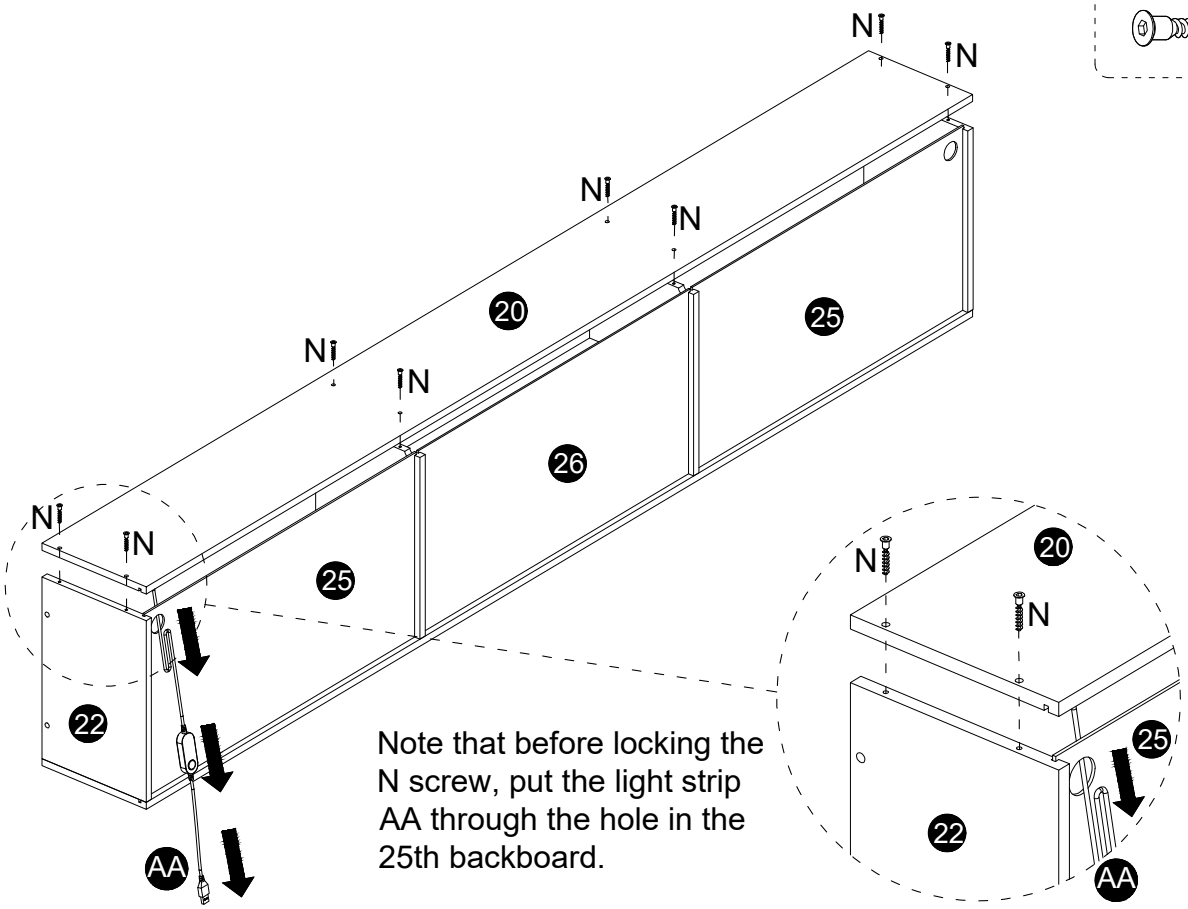
N ST5*30
x8
N
N
N
N
N
N
20
25
26
25
22
AA
Note that before locking the N screw, put the light strip AA through the hole in the 25th backboard.
N
20
N
25
22
AA

59

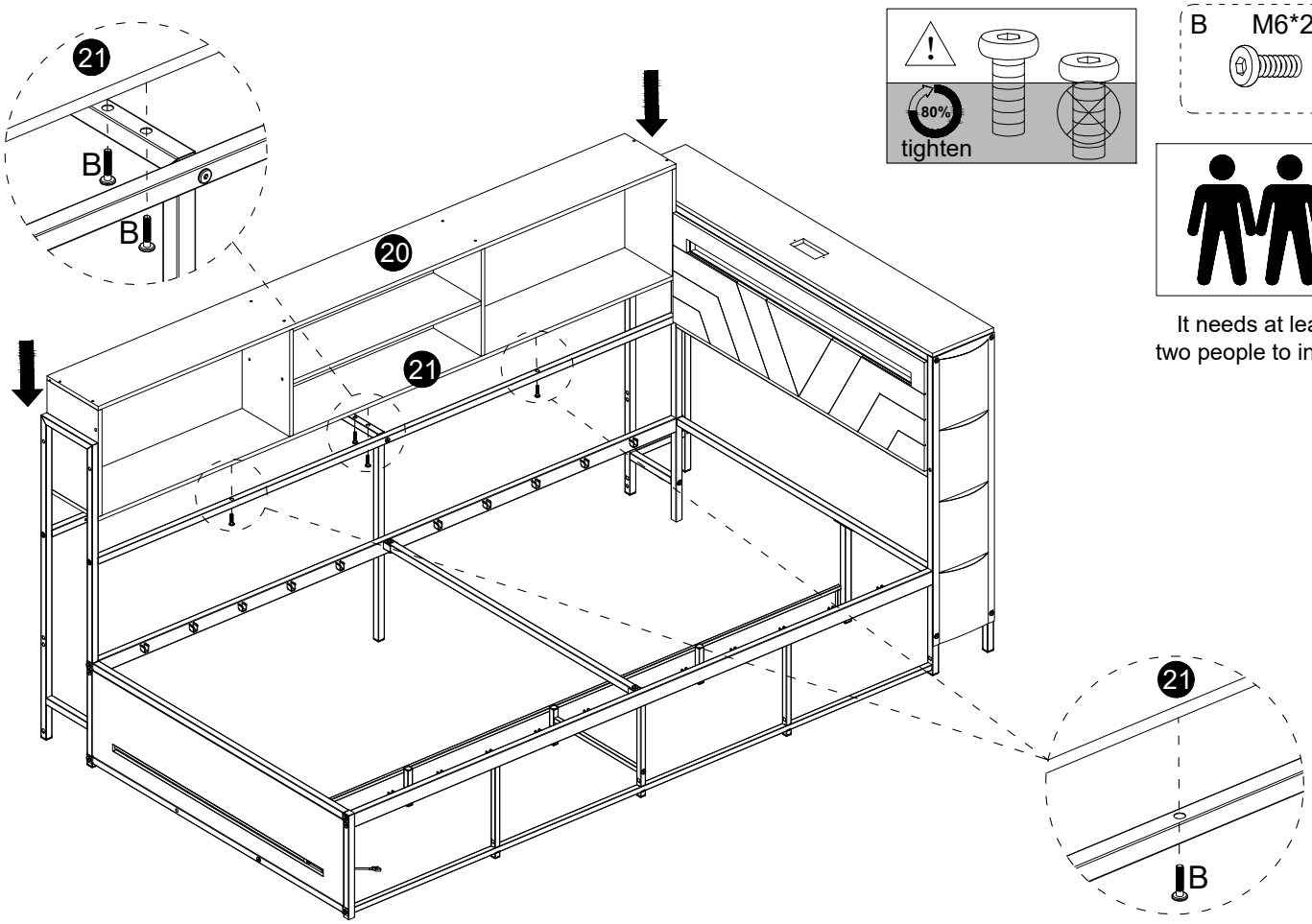
21
B
B
20
21
80%
tighten
B M6*28
x4
It needs at least two people to install.
21
B

60

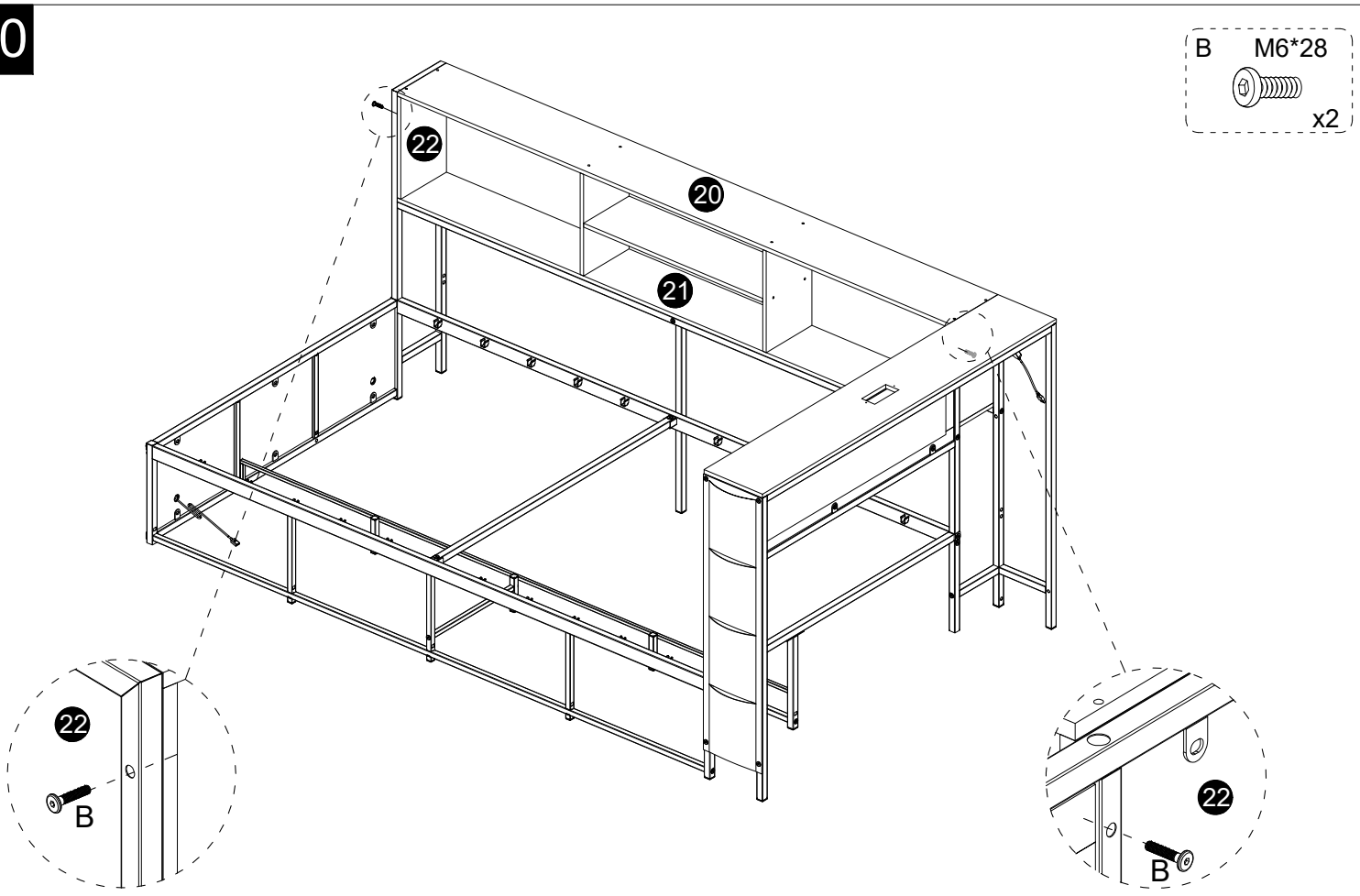

61

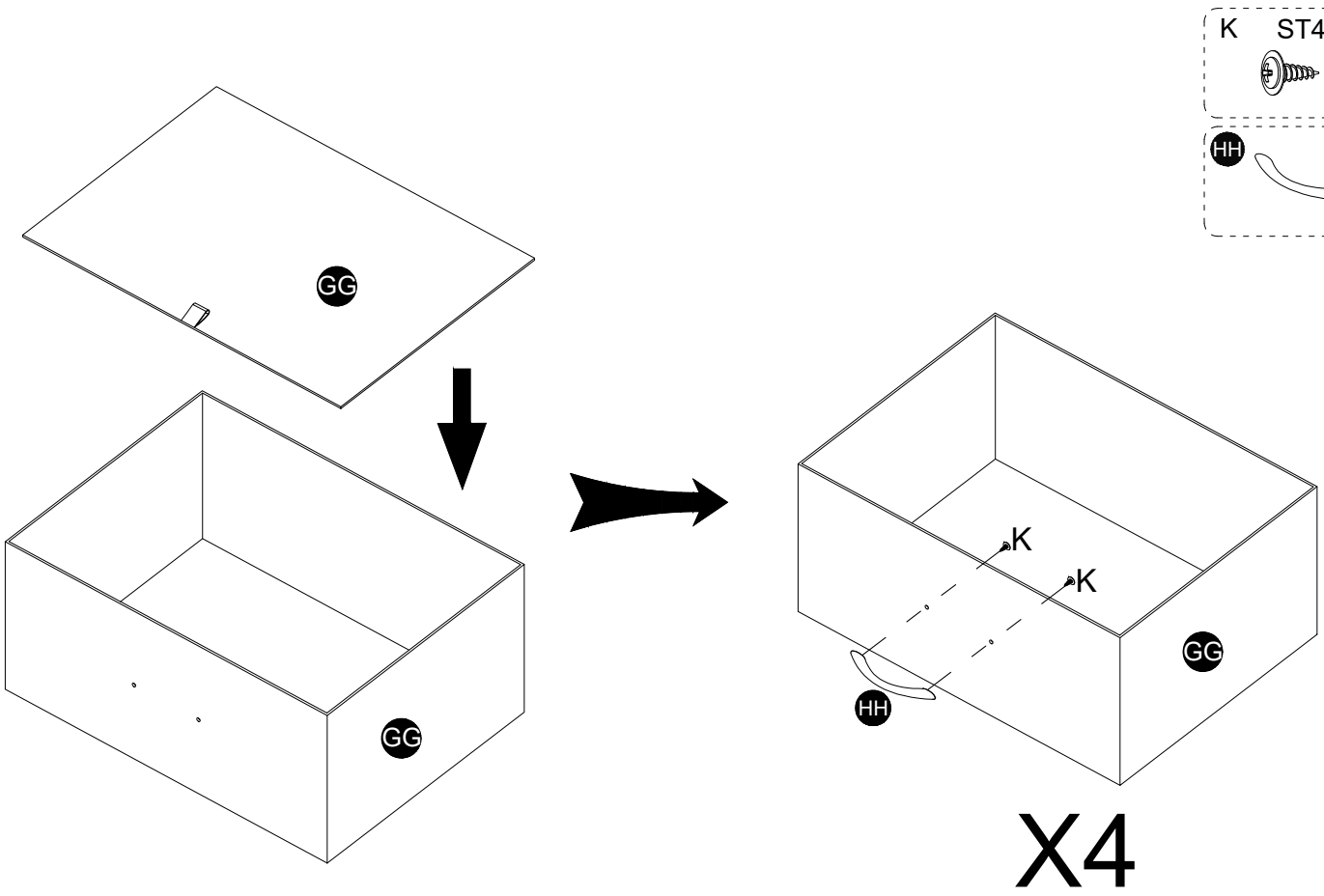

62

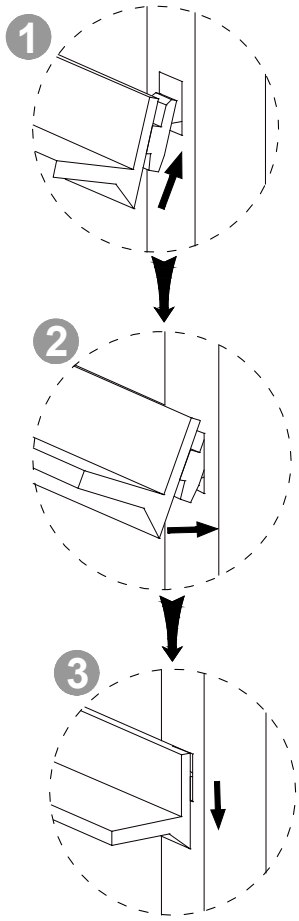

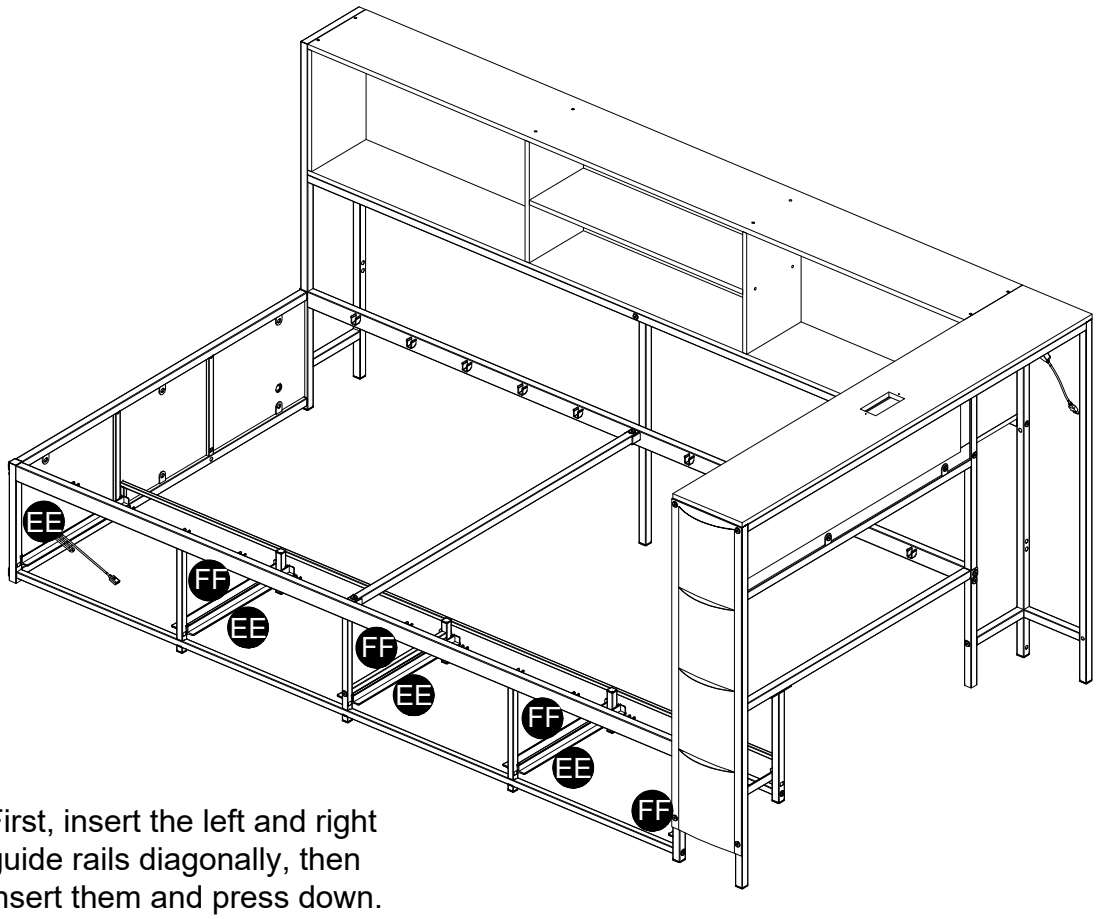

First, insert the left and right guide rails diagonally, then insert them and press down.

63

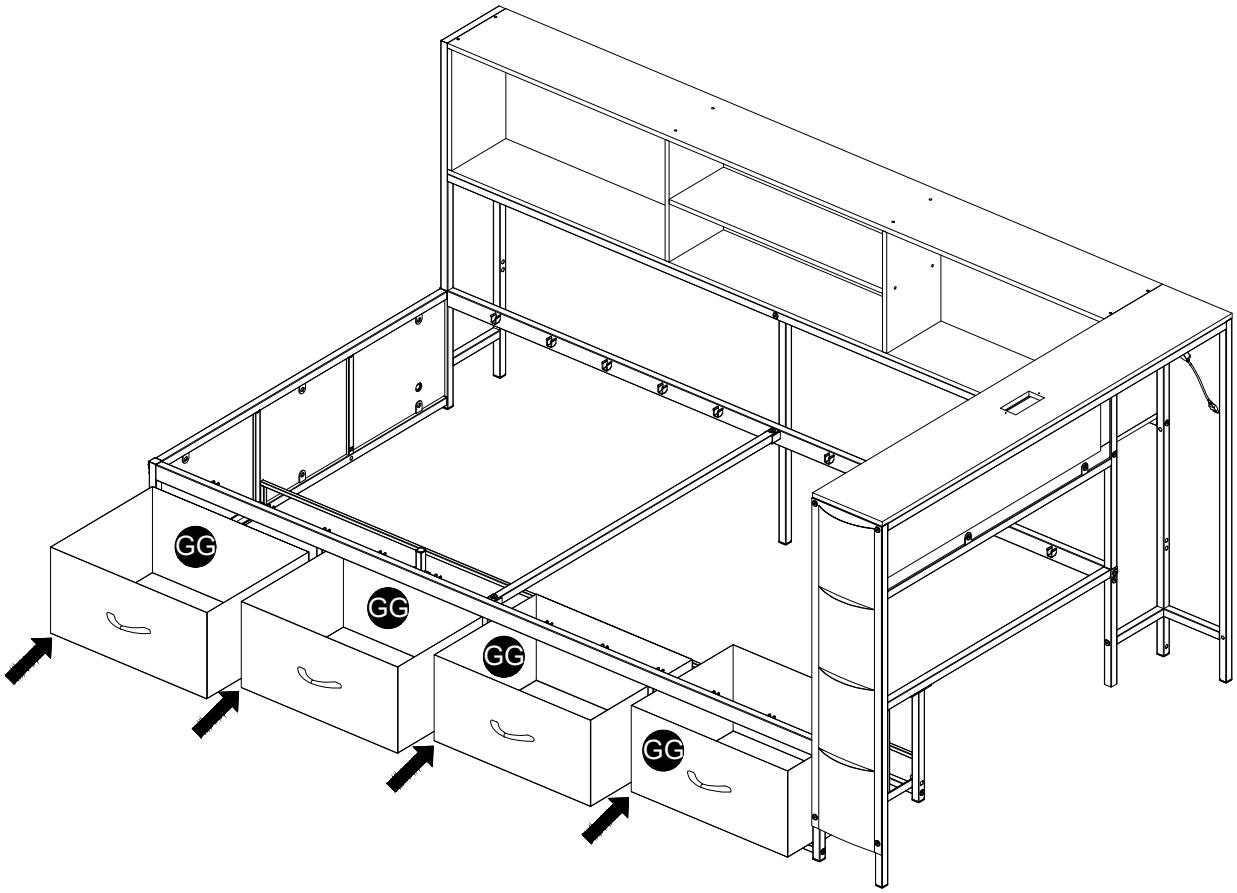

64

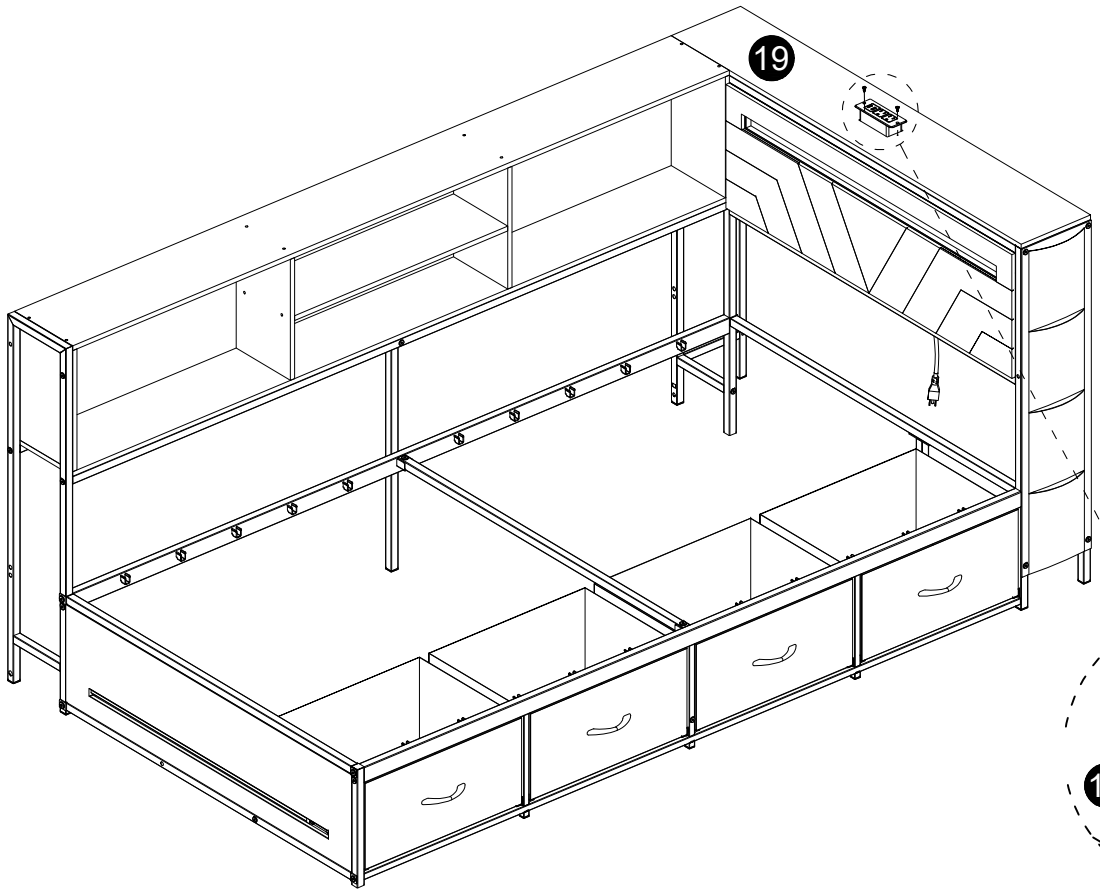

J ST3*12 x2

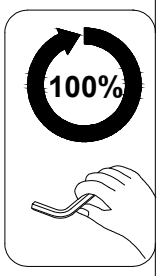

Tighten all screws to 100% after assembly.

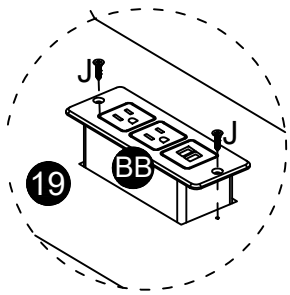

65

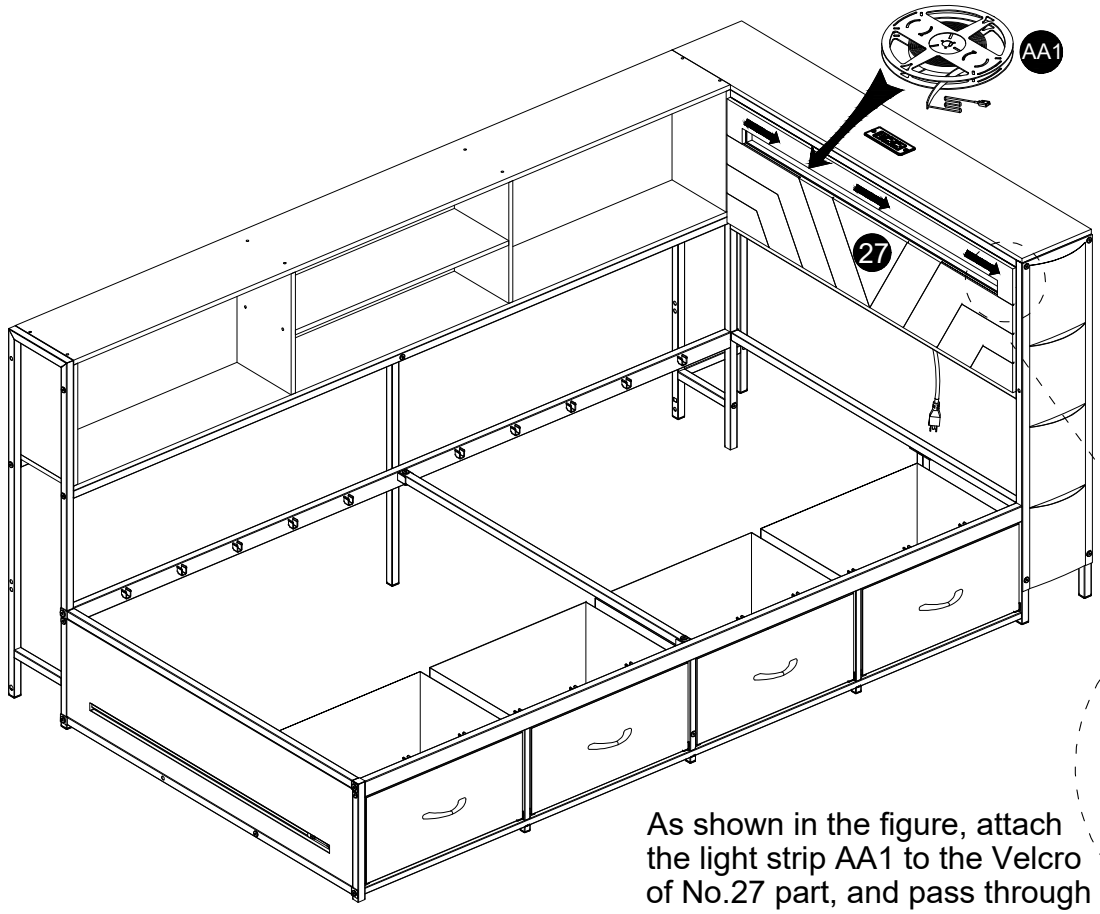

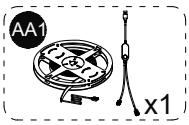

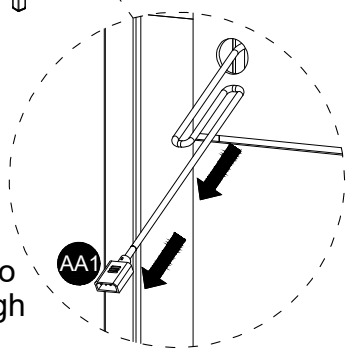

As shown in the figure, attach the light strip AA1 to the Velcro of No.27 part, and pass through the hole of the back plate.

66

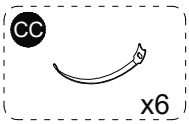

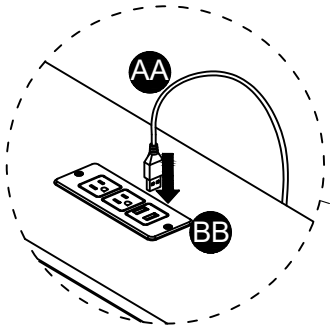

Insert the USB plug of LED strip AA into the USB port of socket BB.

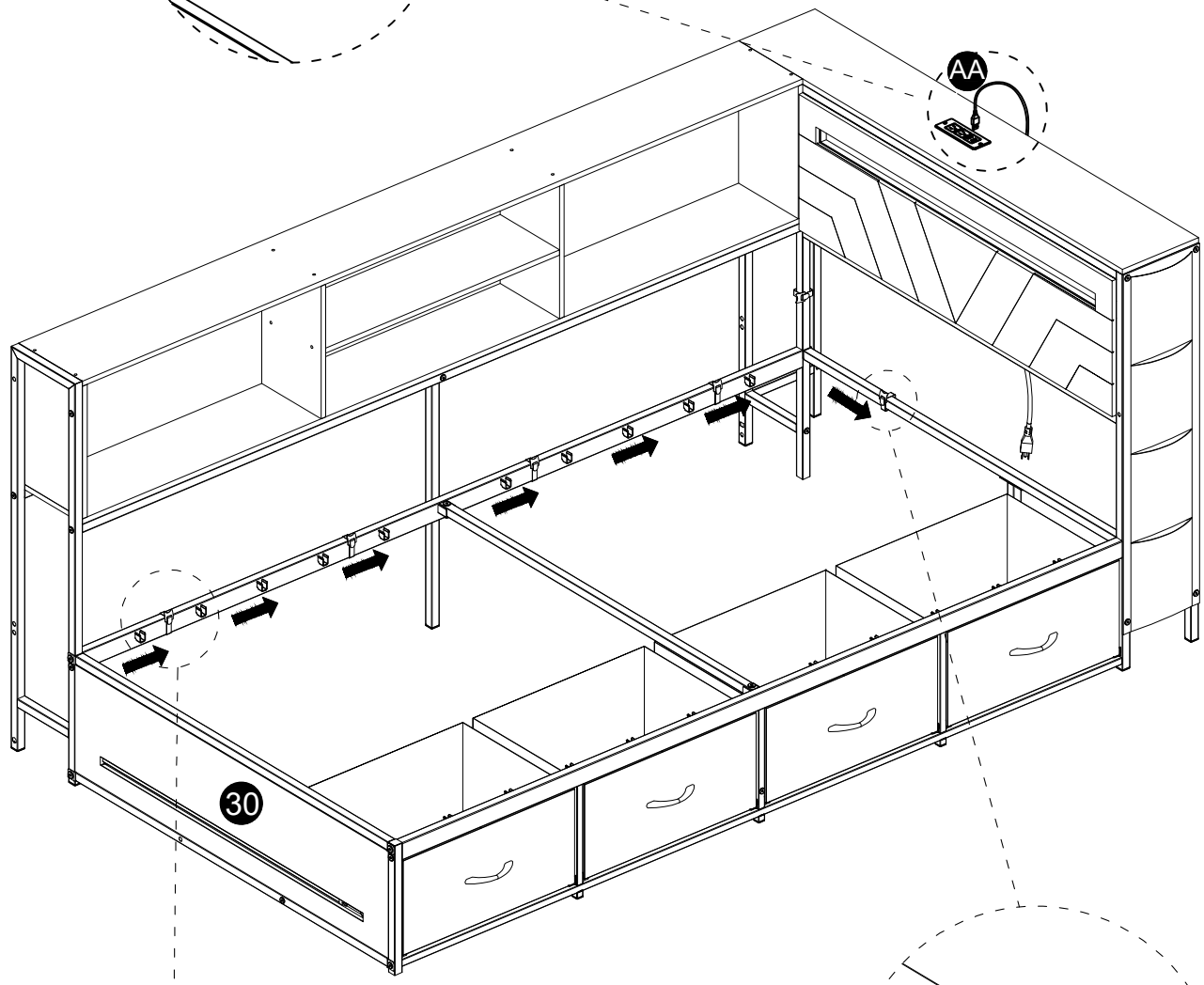

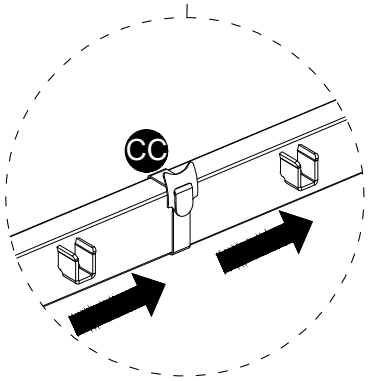

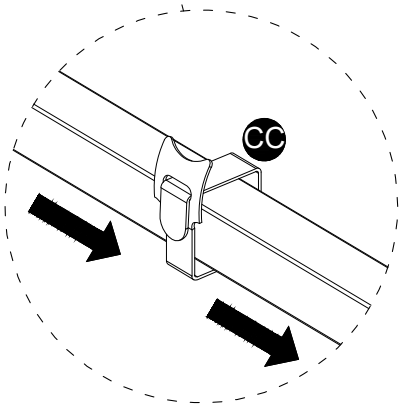

As shown in the figure, first organize the light strip line of part 30, then organize the light strips AA and AA1, and fix them tightly with zip ties CC.

67

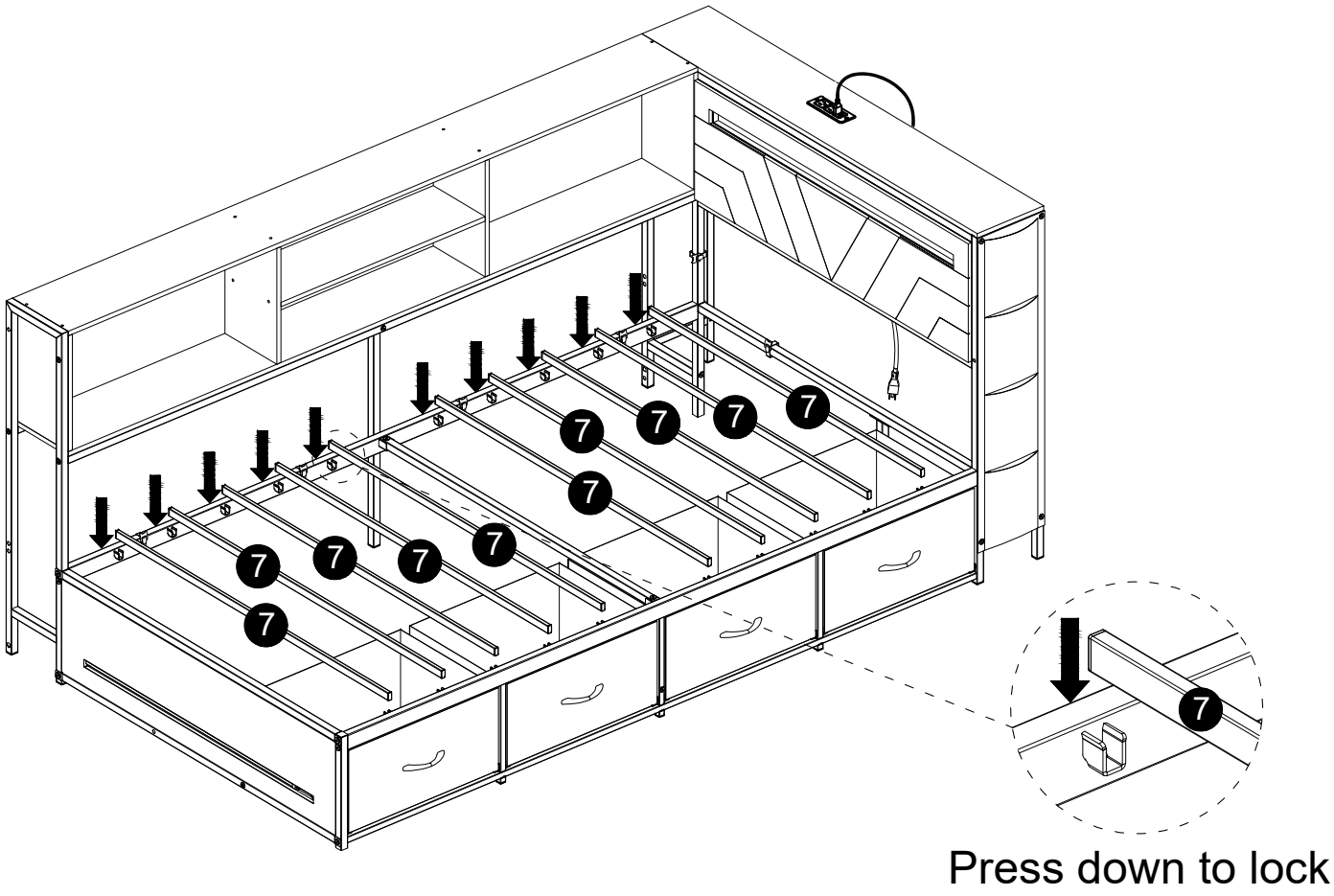

68

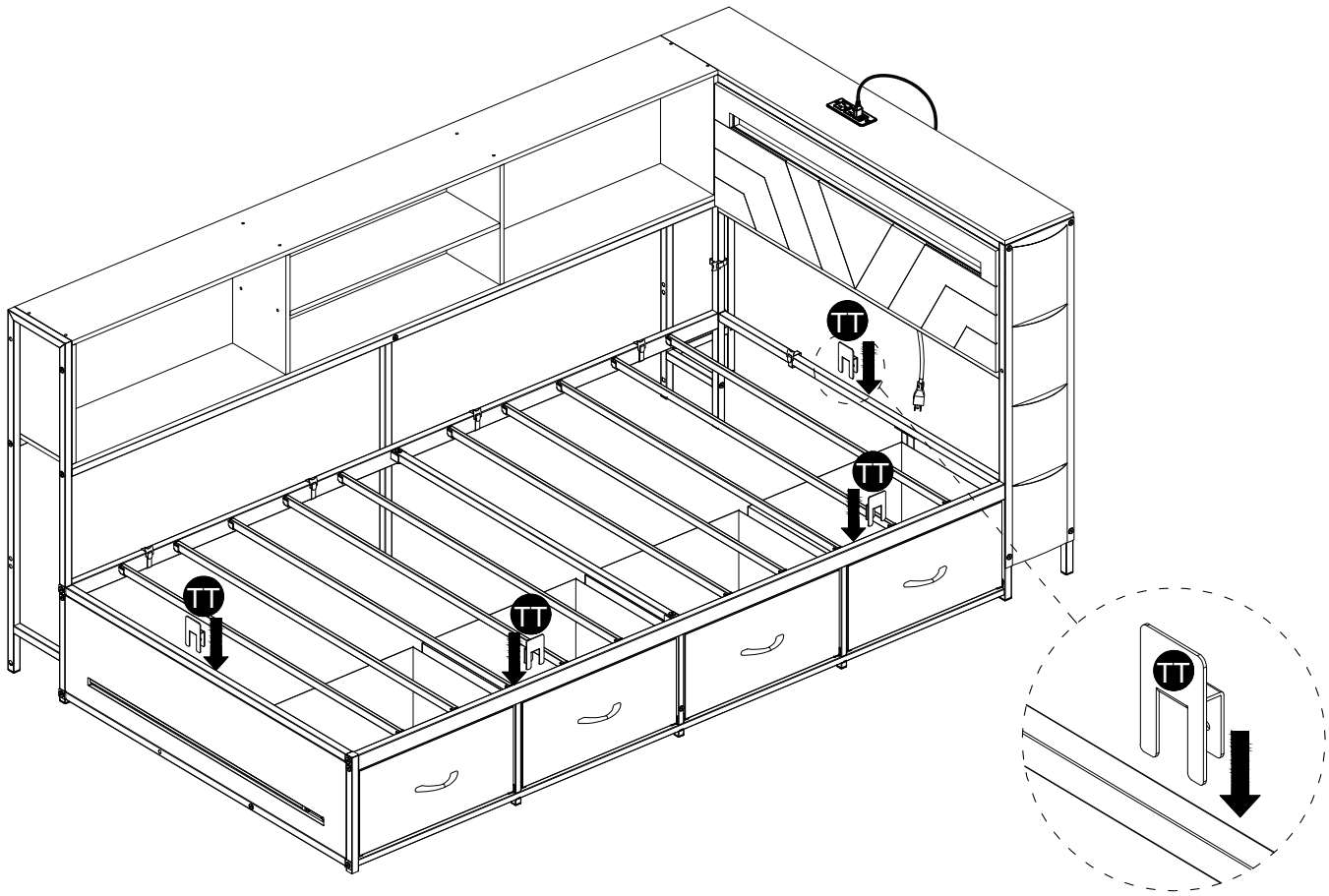

69

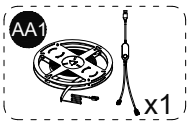

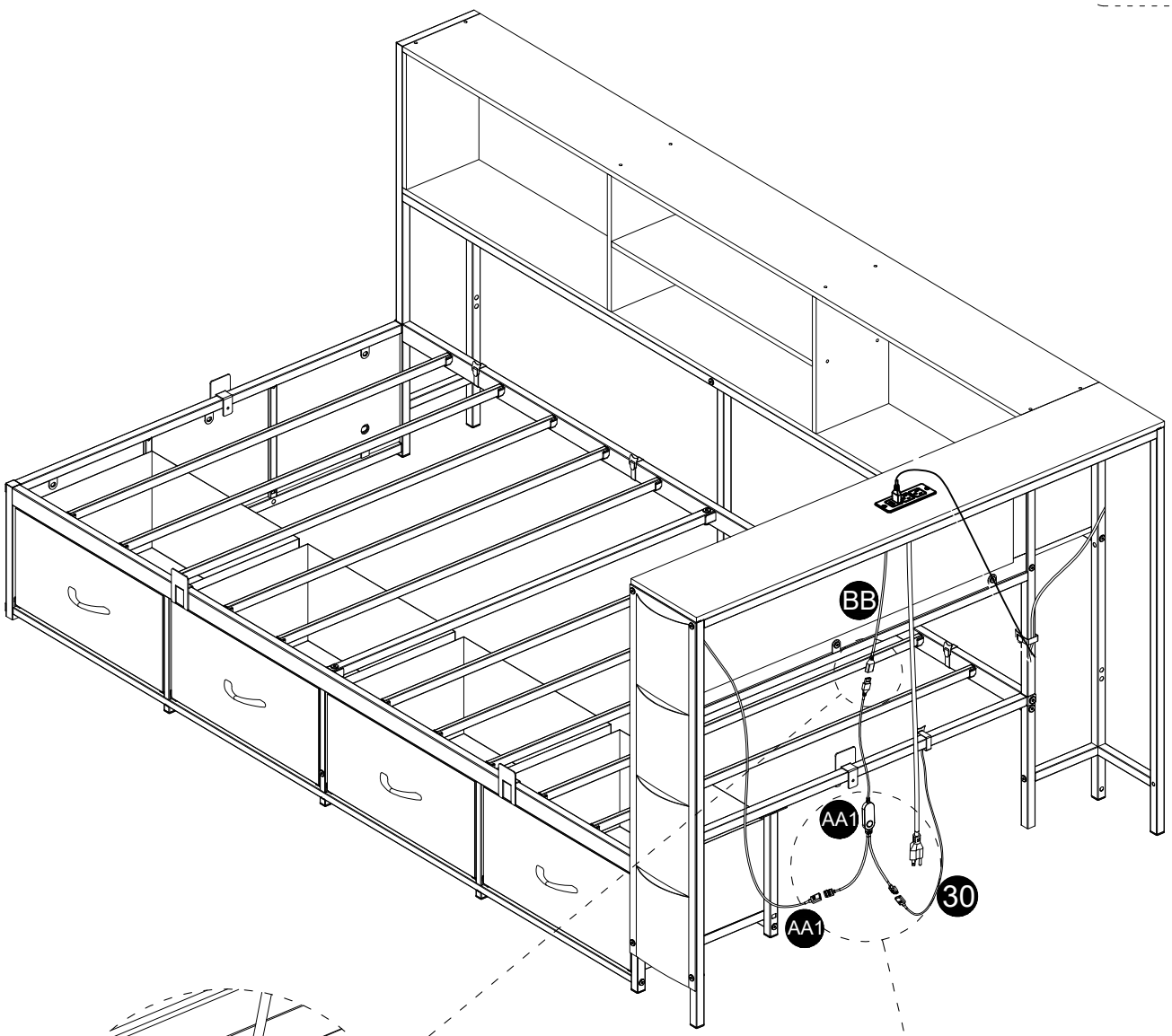

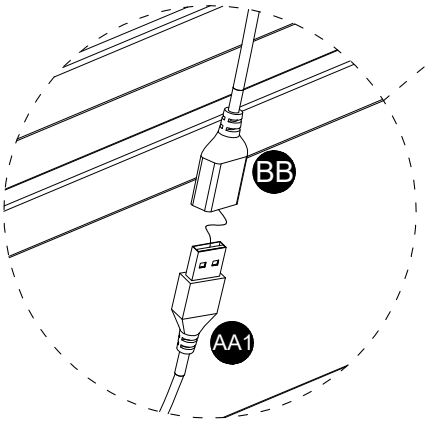

Insert the connector of LED controller AA1 into the expansion port of power socket BB.

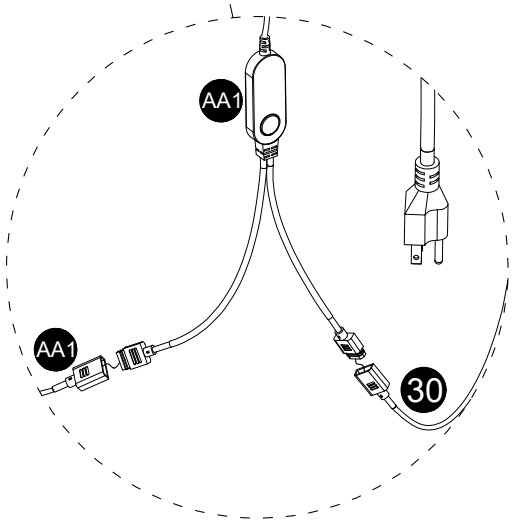

Insert the light strip of part 30 and the plug of light strip AA1 into the interface of LED controller AA1.

70

FINISH

