STEP 1 3

PART	NO.	QTY
	DCH2	1

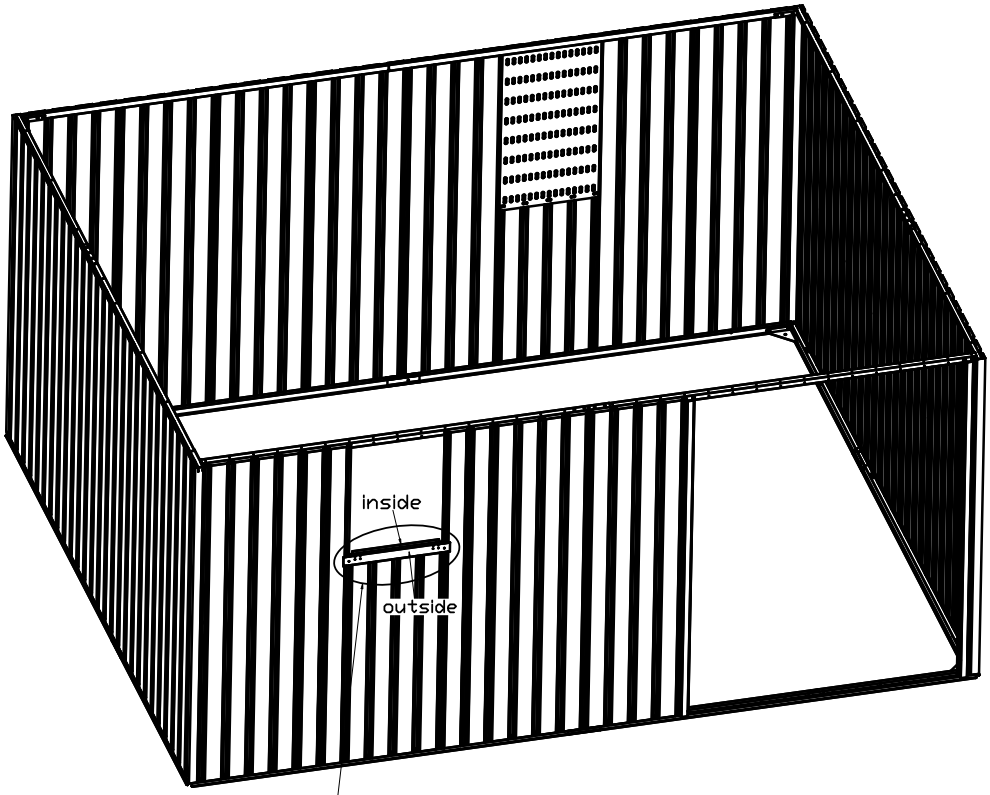

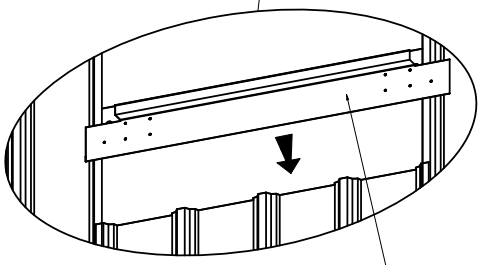

Installation method:
Insert the DCH2 slot onto the W5-FB,
The long side faces outward and
does not require screws for fixation.

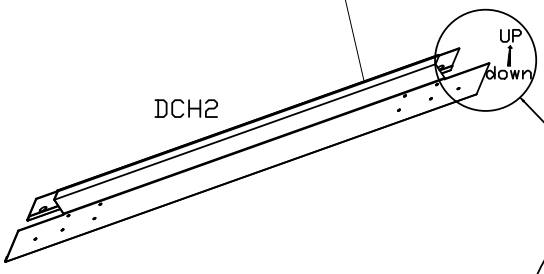

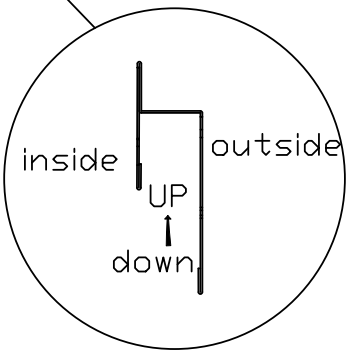

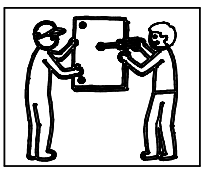

This step requires two people to complete the installation together.

STEP 14

PART	NO.	QTY
	DCH1	2
	F1	4

STEP 15

PART	NO.	QTY
	DCH2	1
	F1	4

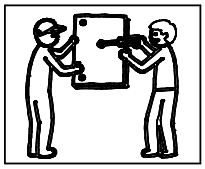

This step requires two people to complete the installation together.

Installation method:
Push DCH2 from top to bottom into DCH1, and finally secure it with F1 screws.

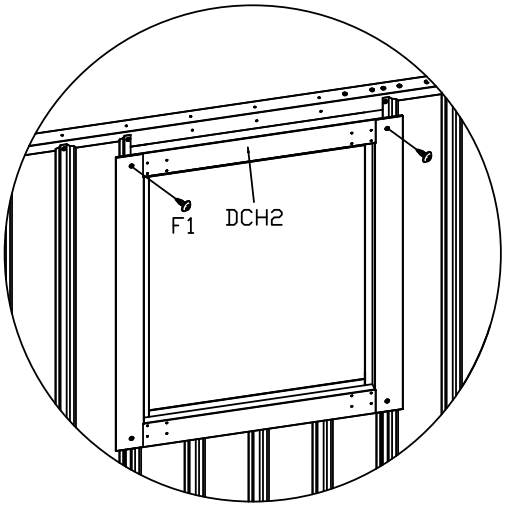

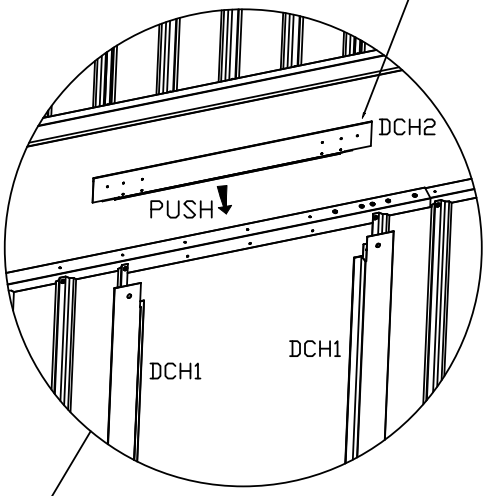

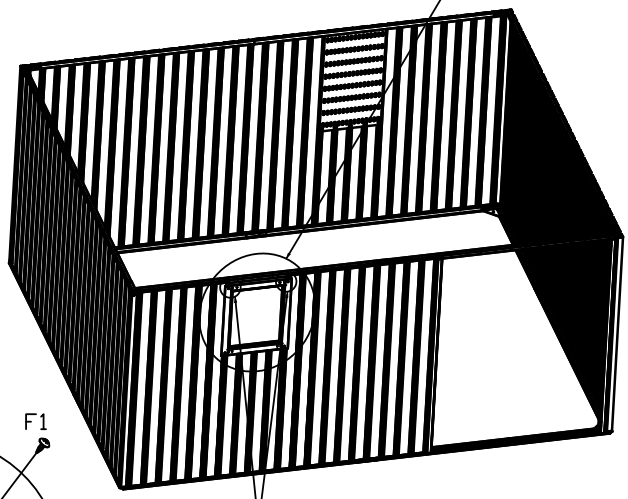

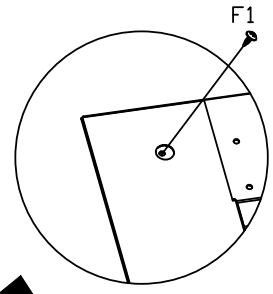

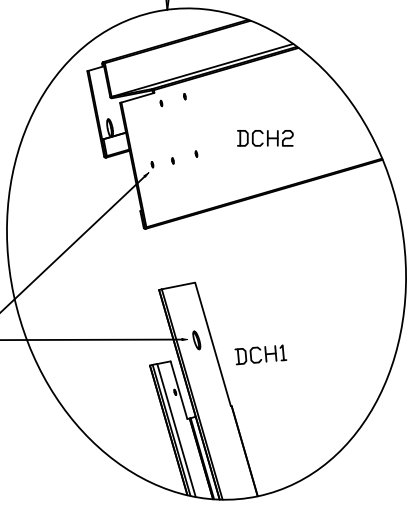

front

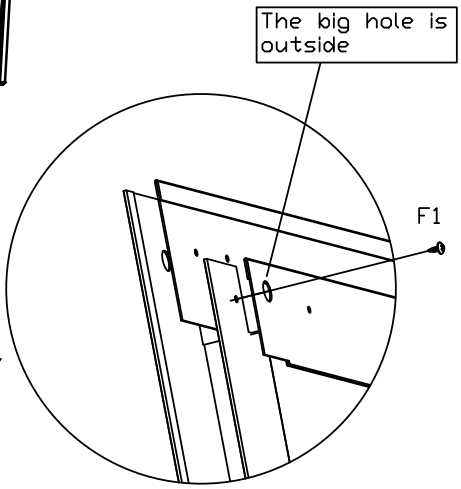

back

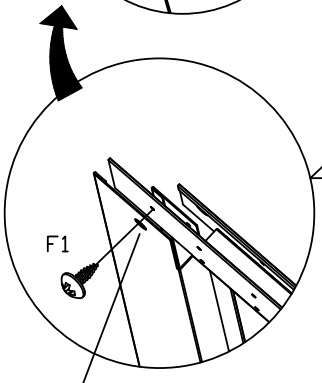

The big hole is outside.

STEP 1 6

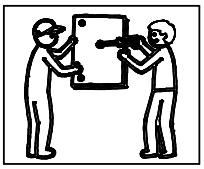

This step requires two people to complete the installation together.

PART	NO.	QTY
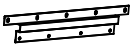	DCH6	1
	F1	9

Installation method:
Push DCH6 from top to bottom into DCH2, and finally secure it with F1 screws.

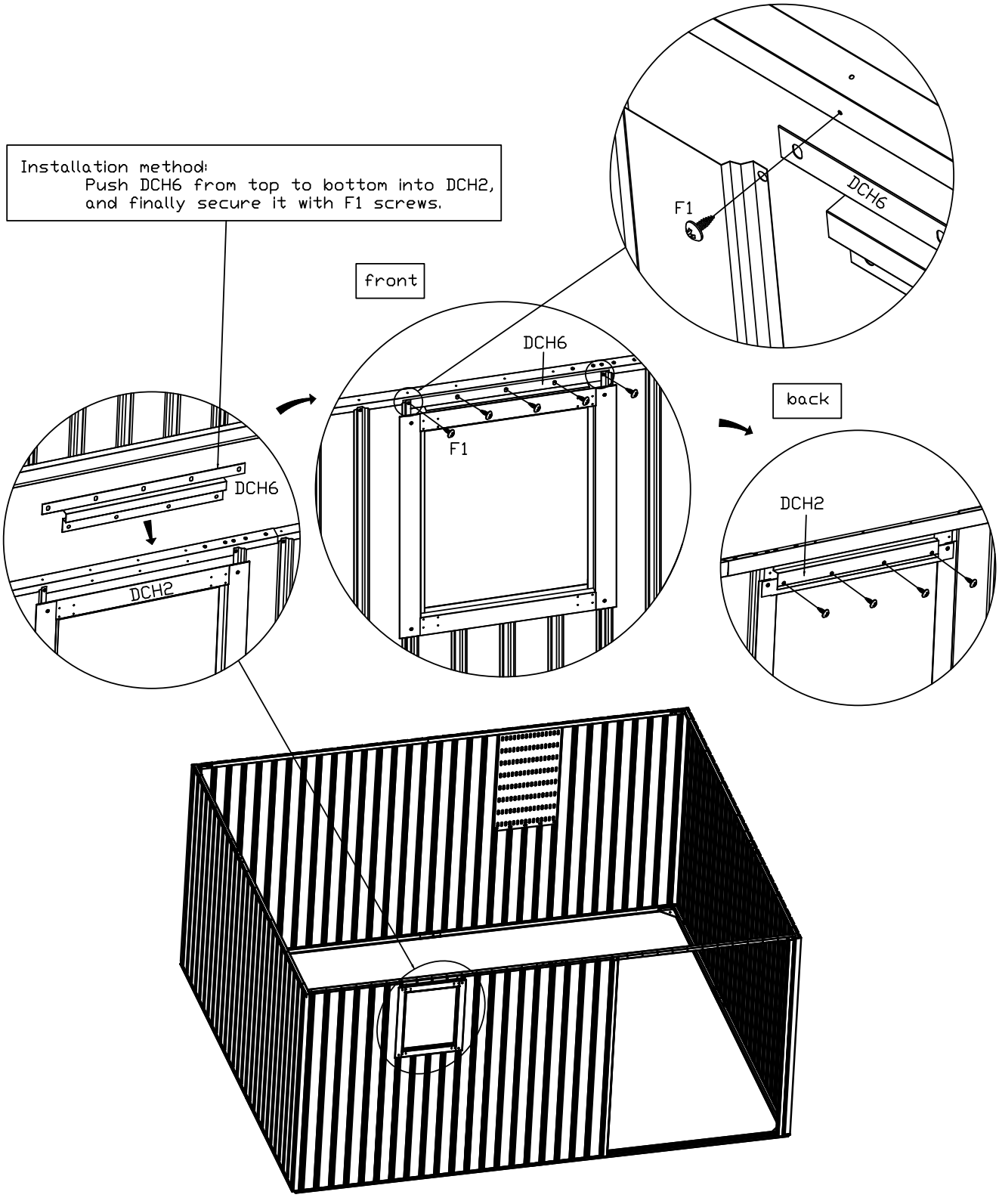

STEP 17

PART	NO.	QTY
	DCH	1
	DC (L)	1
	F1	2
	V2	2

Install the left pin on the left side.

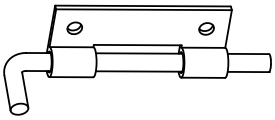

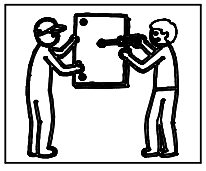

This step requires two people to complete the installation together.

STEP 18

PART	NO.	QTY
	DH3	2
	F1	8

Installation sequence of screws: ① — ② — ③ — ④

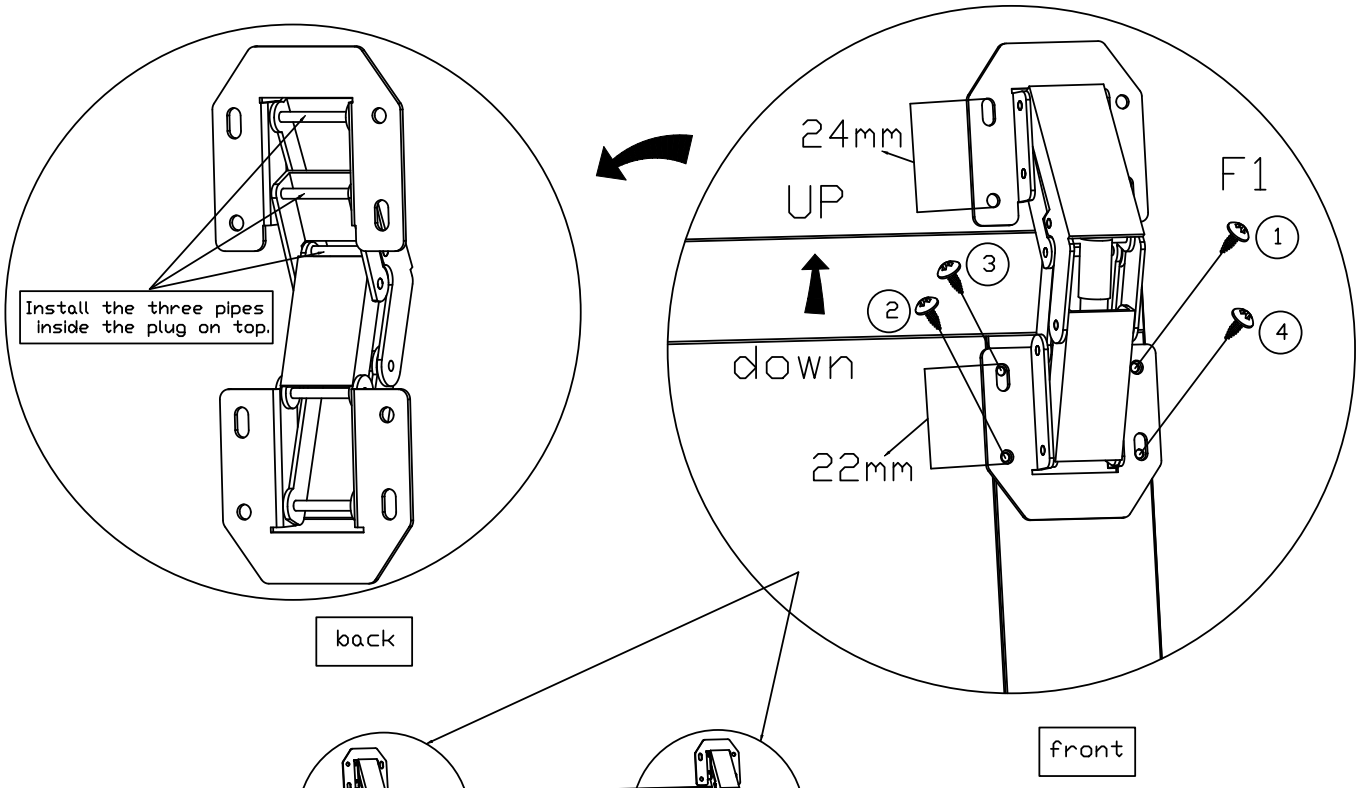

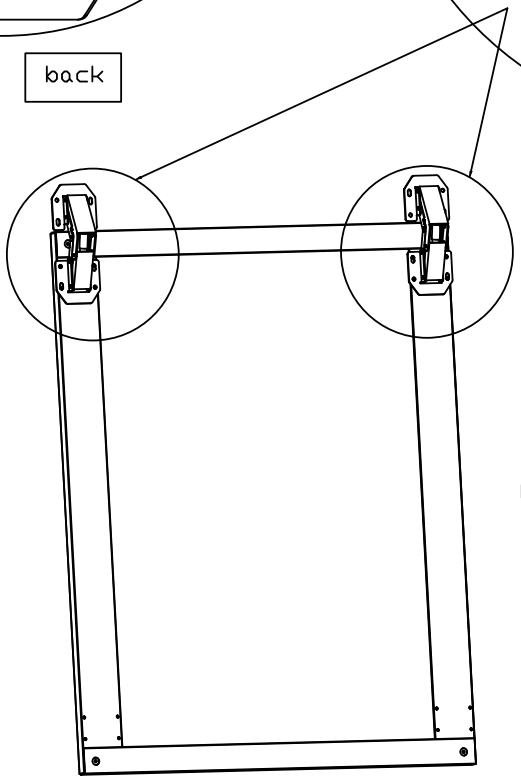

Component 1

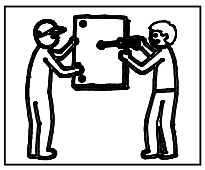

This step requires two people to complete the installation together.

STEP 19

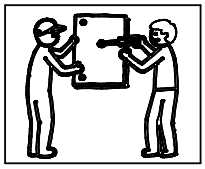

This step requires two people to complete the installation together.

PART	NO.	QTY
	Component 1	1
	F1	8

Installation sequence of screws: (1)—(2)—(3)—(4)

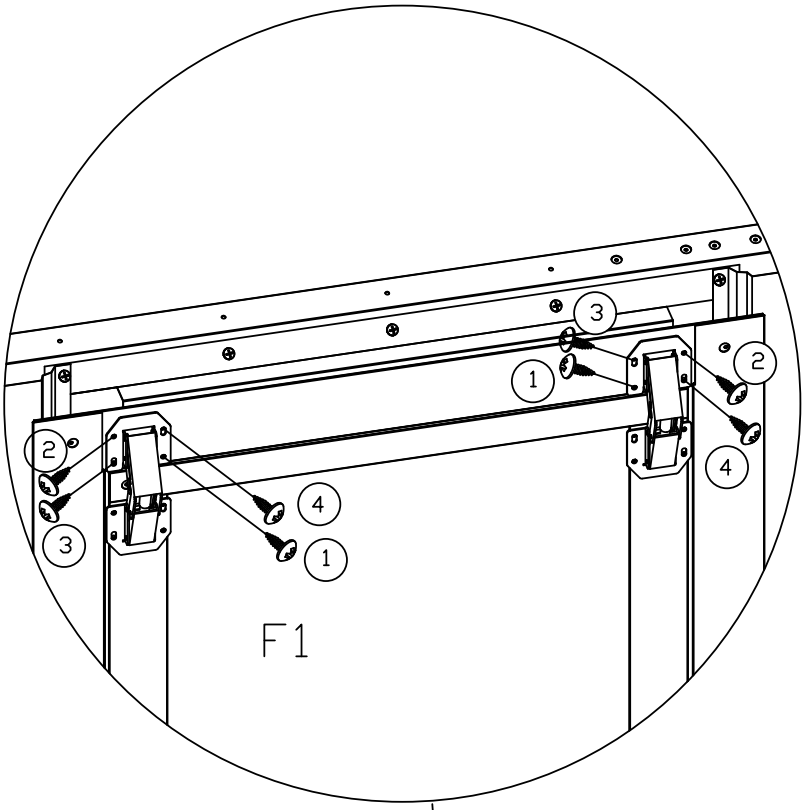

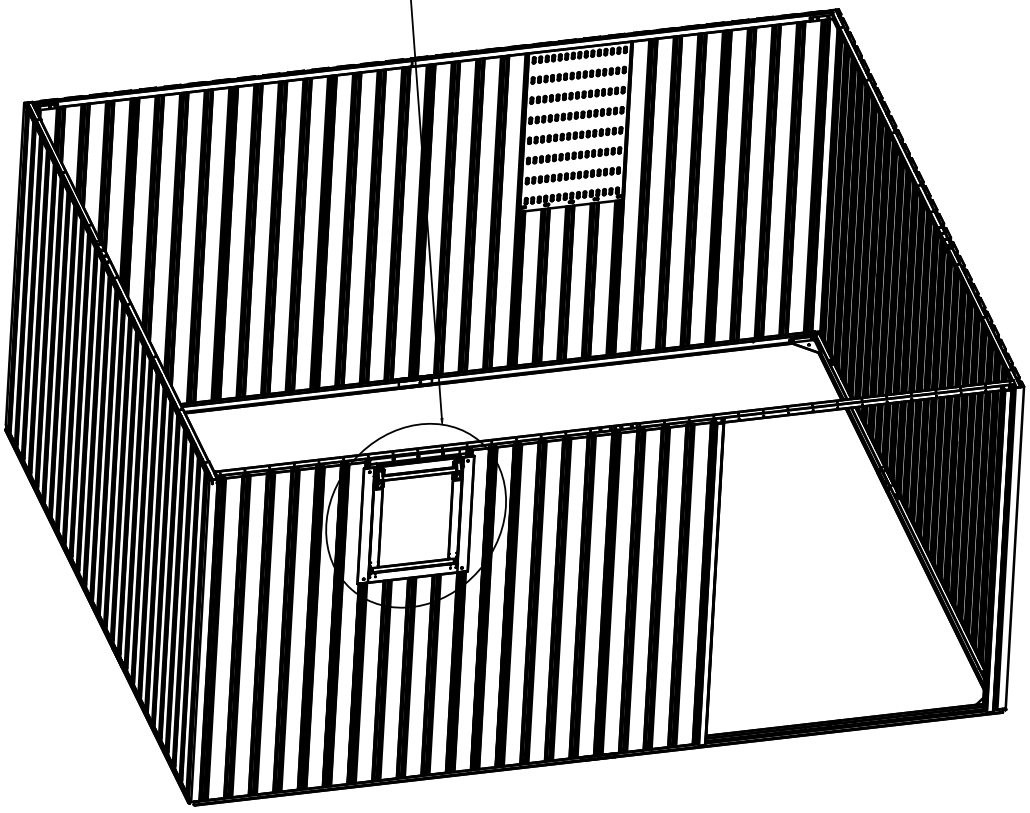

STEP 20

This step requires two people to complete the installation together.

PART	NO.	QTY.
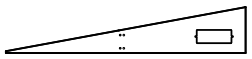	F1209-5L	2
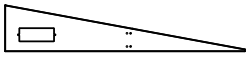	F1209-5R	2
	GF	4
	F2	8

Note the installation direction of GF, The slats should slope downward.

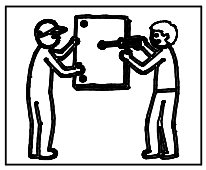

STEP 21

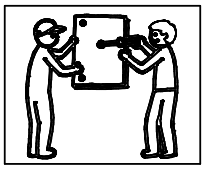

This step requires two people to complete the installation together.

PART	NO.	QTY
	Component B	2
	Component A	2
	F1	16
	V2	16

Attention: Assemble the ventilation board screws in the order shown in the diagram,Install the middle hole first to avoid misalignment.

STEP 22

PART	NO.	QTY.
	C3	4
	K1012-11	8
	F1	16
	F2	4

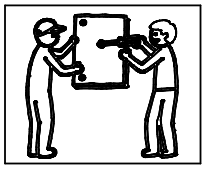

This step requires two people to complete the installation together.

