PRODUCT SPECIFICATION

Model: WST-23-PK1

Series	Elite Workstation
Material	16 Gauge, Type 304 stainless steel
Installation Type	Top mount
Configuration	Single bowl
Finish	Satin brushed finish
Overall Dimensions	33" x 22"
Bowl Dimensions	30 1/4" x 16" x 10"
Drain Size	3 5/8"
Finish Available	Stainless Steel
Minimum cabinet size	36"
Template Included	Yes
Clips Included	Yes
Drain Location	Rear
Accessories Included	Strainer, Bottom grid, Drying rack and Cutting board



ACCESSORY
Strainer - L-1
Bottom Grid - GR-3232
Cutting Board - CB1711SWR15
Drying Rack - DR1713

MODEL	FINISH
WST-23-PK1	Stainless Steel

Stocked Color Options



Stainless Steel

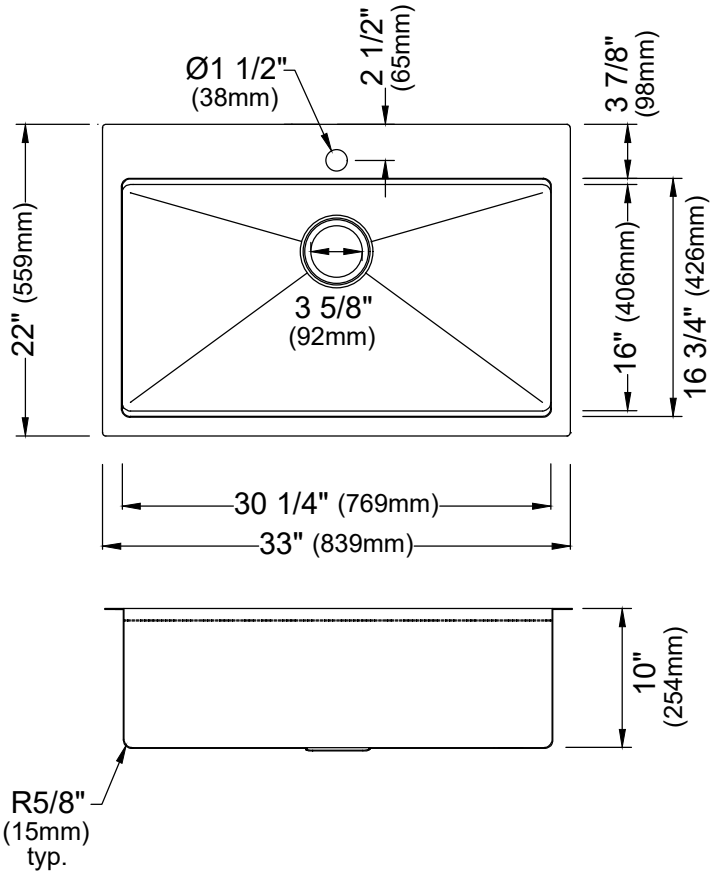

Listing and certifications:
cUPC

Limited lifetime warranty

We reserve the right to update product specifications without notice. Please visit karran.com for the most current specification sheets. All dimensions are accurate to 1/4". REV 10-2026