BG-FXQ252601 BGP2102-50R-01 75R-01说明书2025.7.2
145X210MM

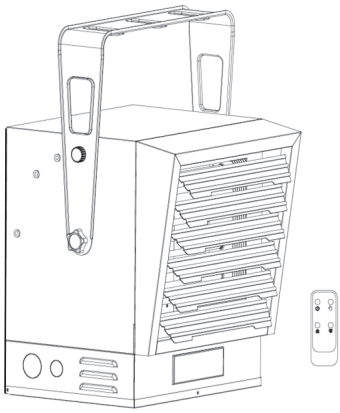

Garage& Utility Electric Heater

BGP2102-50R

BGP2102-75R

BGP2102-100R

Installation Instructions and Operator's Manual

WARNING! IF THE INFORMATION IN THIS MANUAL IS NOT FOLLOWED EXACTLY, A FIRE MAY RESULT CAUSING PROPERTY DAMAGE, PERSONAL INJURY OR LOSS OF LIFE.

C ETL LISTED US
Intertek
Made in China

FOR YOUR SAFETY
DO NOT STORE
OR USE GASOLINE OR
OTHER FLAMMABLE VAPORS
OR LIQUIDS
IN THE VICINITY OF THIS OR
ANY OTHER APPLIANCE

This heater should be installed by qualified persons only and in accordance with the National Electric Code (Canadian Electrical Code in Canada) and all applicable local codes. Supply wiring must be copper and suitable for at least.75°C

BGP2102-50R - minimum 10 gauge SJO o.r SJTO copper type wiring required.

BGP2102-75R - minimum 8 gauge SJO o.r SJTO copper type wiring required.

BGP2102-100R - minimum 6 gauge SJO o.r SJTO copper type wiring required.

Customer Service Information
Email Address: service@velayhome.com
Contact Number: 302-281-1886

UL 2021. FIXED AND LOCATION – DEDICATED ELECTRIC ROOM HEATERS
DO NOT DISCARD THIS MANUAL
CUSTOMER: PLEASE RETAIN THIS MANUAL FOR FUTURE USE

IMPORTANT INSTRUCTIONS

PLEASE READ AND SAVE THESE IMPORTANT SAFETY INSTRUCTIONS

WHEN USING ELECTRIC APPLIANCES, BASIC PRECAUTIONS SHOULD ALWAYS BE FOLLOWED TO REDUCE THE RISK OF FIRE, ELECTRIC SHOCK, AND INJURY TO PERSONS, INCLUDING THE FOLLOWING:

1. Read all instructions before using this heater.
2. This heater is hot when in use. To avoid burns, do not let bare skin touch hot surfaces. If provided, use handles when moving this heater. Keep combustible materials, such as furniture, pillows, bedding, papers, clothes and curtains at least 3 feet (0.9m) from the heater.
3. Extreme caution is necessary when any heater is used by or near children, pets or invalids and whenever the heater is left operating unattended.
4. Do not operate any heater with a damaged cord or plug or after the heater malfunctions, has been dropped or damaged in any manner. Disconnect power at service panel and have heater inspected and or repaired by a qualified service person.
5. Do not use outdoor.
6. Under no circumstances should this appliance be modified. Parts having to be removed for servicing must be replaced prior to operating this appliance again.
7. This heater is intended for comfort heating applications and not intended for use in special environments. Do not use in damp or wet locations such as marine or greenhouse or in areas where corrosive or chemical agents are present.
8. To disconnect heater, first turn controls to off, and turn off power to heater circuit at main disconnect panel.
9. Do not insert or allow foreign objects to enter any ventilation or exhaust opening as this may cause an electrical shock or fire, or damage the heater.
10. To prevent a possible fire, do not block air intakes or exhaust in any manner. Do not use on soft surfaces, like a bed, where openings may become blocked.
11. This appliance has hot and arcing or sparking parts inside. Do not use it in areas where gasoline, paint or flammable liquids are used or stored.
12. Use this heater only as described in this manual. Any other use not recommended by the manufacturer may cause fire, electric shock, or injury to persons.
13. This heater is not to be used as a portable unit and or have a cord and plug installed. (HARD WIRED ONLY)
14. This heater is provided with automatic resetting thermal limit and an alarm beeper to alert user if heater has overheated. If the alarm has activated, immediately turn off the heater and inspect and remove any objects around heater that may have blocked the airflow or otherwise caused the heater to overheat. Do not continue to use heater if it repeatedly overheats and activates the alarm. **DO NOT OPERATE THE HEATER WITH THE ALARM SOUNDING (FLASHING).**

CAUTION - Once heater has cycled off on the thermal limit, the heater will not return to operation until the user restarts and reprograms the control. Therefore, this unit is not recommended for freeze protection applications.

15. When installing, see **INSTALLATION INSTRUCTIONS** for additional warnings and precautions.
16. For safe and efficient operation, and to extend the life of your heater, keep your heater clean - See **MAINTENANCE INSTRUCTIONS**.

SAVE THESE INSTRUCTIONS

SPECIFICATIONS (All Specifications +5%/-10% tolerance)

Model No	Volts/Hertz	Amps	Watts	BTU/HR	Phase	Minimum Circuit
BGP2102-50R	208-240V/60HZ	21	3750-5000	17060	1	30
BGP2102-75R	208-240V/60HZ	31.25	5630-7500	25590	1	40
BGP2102-100R	208-240V/60HZ	42	7500-10000	34120	1	50

WARNING

To prevent a possible fire, injury to persons or damage to the heater, adhere to the following:

1. Disconnect all power coming to heater at main service panel before wiring or servicing.
2. All wiring procedures and connections must be in accordance with the National and Local Codes having jurisdiction and the heater must be grounded.
3. Verify the power supply voltage coming to heater matches the ratings as shown on the heater nameplate.

CAUTION: ENERGIZING HEATER AT A VOLTAGE GREATER THAN THE VOLTAGE PRINTED ON THE NAMEPLATE WILL DAMAGE THE HEATER AND VOID THE WARRANTY AND COULD CAUSE A FIRE.

4. CAUTION: High temperature, risk of fire, keep electrical cords, drapery, furnishings, and other combustibles at least 3 feet (0.9 m) from front of heater. Do not install heater behind doors, below towel racks, or in an area where it is subject to being blocked by furniture, curtains or storage materials. Hot air from the heater may damage certain fabrics and plastics.
5. To reduce the risk of fire do not store or use gasoline or other flammable vapors and liquids in the vicinity of the heater.
6. When heater is to be wall or ceiling mounted, the anchoring provision must be sufficient strength to support the total weight of the heater plus the weight of the mounting provisions. Failure to properly secure the supporting members of the building structure could allow the heater to fall.
7. The following minimum clearances must be maintained: 30° Tilted, Bottom of Heater to Floor: 6' (1.8 M) minimum, 11' (3.3 M) recommended maximum Horizontal Airflow, Bottom of Heater to Floor: 6' (1.8 M) minimum, 8' (2.4 M) recommended maximum Side of heater to adjacent wall: 13" (33 cm)
8. Do not use this heater for drying out paint, plaster, sawdust and drywall sanding dust as this will permanently damage the heater and must be kept out of the heater.

Unpacking Your New Heater: Remove heater from box, locate parts bag in packing material, and inspect to make sure heater is not damaged or missing parts. If damaged or parts are missing, call our Technical Service Hotline at 1- for assistance. Do not return to store where purchased until you first call the above number for assistance.

HARDWARE INCLUDED: Figure 1

Garage heater **Remote** **BGP2102-100R bracket 6 pcs screws 6 pcs washers** **BGP2102-50R and BGP2102-75R bracket 3 pcs screws 3 pcs washers**

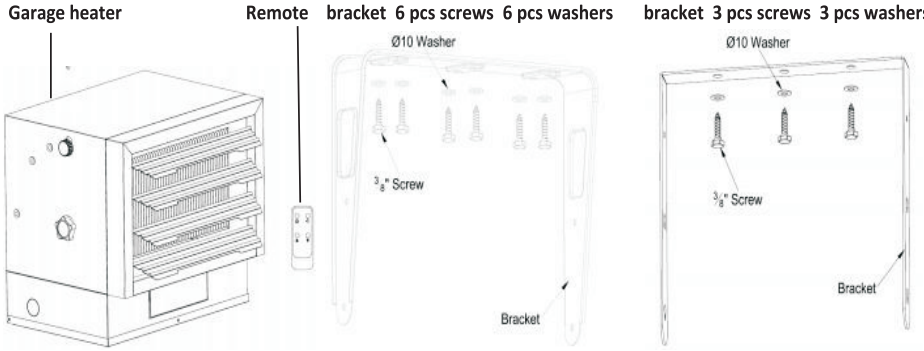

INSTALLATION INSTRUCTIONS

TOOLS NEEDED:

- Phillips head screwdriver
- 5/32in. or4mmdrillbit
- Power Drill
- Stud Finder
- The remote control is powered by 2 AAA batteries. Batteries are NOT included

HARDWARE REQUIRED FOR WIRING HEATER:

- Adequate gauge and length of copper wire (2 power conductors plus ground) suitable for application to route electrical panel to heater
- Suitable Junction Box and connectors as required for application
- Appropriate size wire nuts for connection branch circuit wires to pigtails.
- A length of flexible conduit (or as required by the NEC and local codes) to route power to heater.

NOTE: Hardware supplied is intended for installation into wood framing only. If installation into other type of construction, additional hardware will be required for correct installation.

CONNECTORS, CABLE AND HARDWARE USED TO WIRE THE HEATER: Figure 2

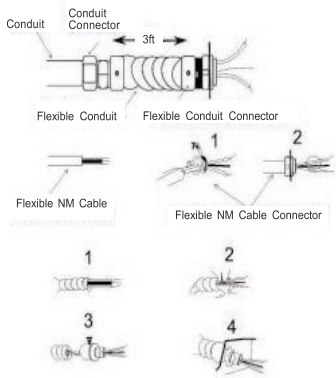

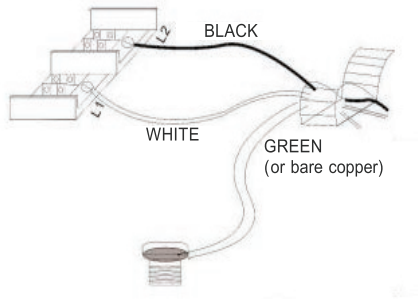

LOCATING THE HEATER: Figure 3

The heater should be installed out of traffic areas and at least 6' off the floor. (8” above floor in Canada) The direction of air flow should not be restricted (ie: by columns or machinery) and the air flow should wipe exposed walls, rather than blowing directly at them. When more than one heater is used in an area, the heaters should be arranged so that the air discharge of each heater supports the air flow of the others to provide best circulation of warm air, as indicated in the Figure below.

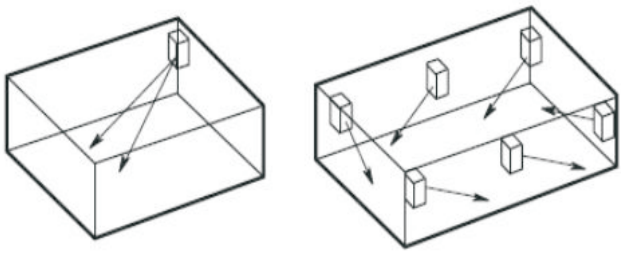

INSTALLATION INSTRUCTIONS

MOUNTING AND MINIMUM CLEARANCES:

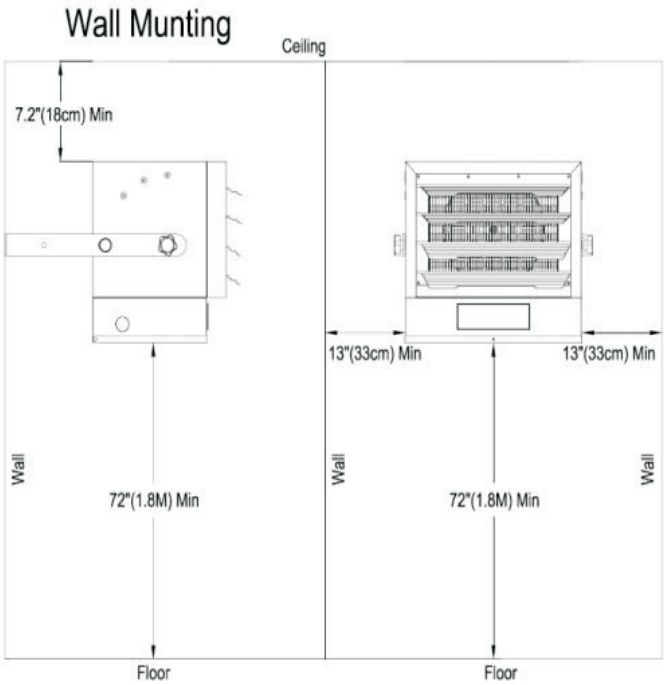

Figure 4

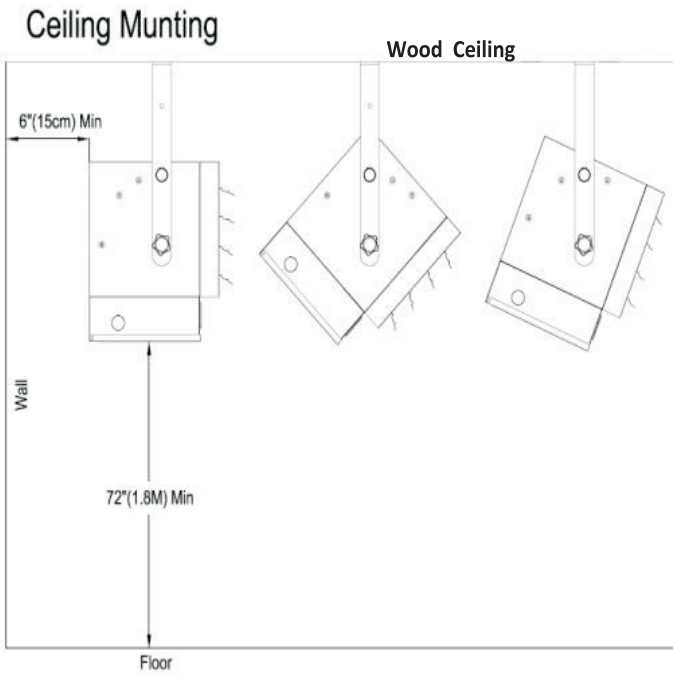

Figure 5

INSTALLATION INSTRUCTIONS

- **WARNING:** Fall Hazard - Heater must be attached to a joist with 3 screws (5000W & 7500W item) or 6 screws (10000W item) to prevent heater from possibly falling. The screws provided with heater are intended for installing in wood framing only and not intended for metal joists or other types of construction. If installation into other type of construction, additional hardware will be required for correct installation. All hardware must be tightened securely.

HEATER MOUNTING:

1. Locate the wood stud or joist in ceiling and mark line in location for heater to be installed. **NOTE:** The wall/ceiling mounting bracket allows installation onto a wall or ceiling using the specific mounting holes and minimum clearances as shown in Fig 4 and 5.
2. Determine the desired location for mounting making sure the minimum clearances as noted in this manual are maintained and using the bracket from the box, place a washer on screws before inserting through the holes in the mounting bracket and screw them securely into a ceiling joist.
3. Attach the heating unit to the mounting bracket.
4. Lift the heater up and into the mounting bracket.
5. Align the bracket screws with the keyhole slots in the mounting bracket.
6. If the heater is to be tilted it must be positioned in the keyhole slots - see figure 6.
7. Tighten the bracket screws with a wrench so the Unit is securely suspended at horizontal or vertical level.
8. To tilt the unit vertically, loosen the bracket screws (see figure 6).

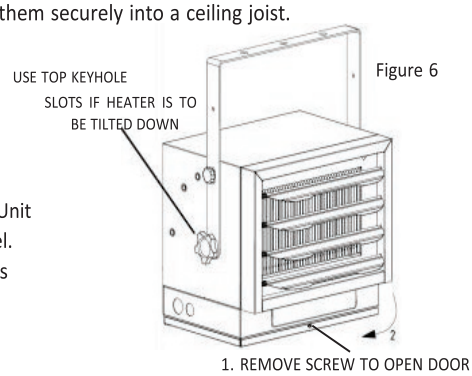

Figure 6

NOTE: For the heater to be tilted vertically, it must be mounted in bottom keyhole slots of mounting brackets to maintain adequate clearance and prevent possible overheating.

9. Adjust louvers to the desired position (see figure 7).

NOTE: The louvers are designed so they cannot be complete closed. Do not attempt to bypass this feature damage to the unit can result.

Figure 7

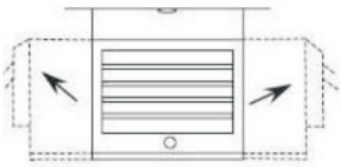

⚠ WARNING ⚠

TO PREVENT POSSIBLE ELECTRIC SHOCK, DISCONNECT POWER TO THE HEATER AT THE MAIN SERVICE BOX BEFORE ATTEMPTING TO ADJUST THE HEAT OUTPUT OF THIS UNIT.

WIRING INSTRUCTIONS

After heater has been properly mounted to the building structure and appropriate branch circuit wiring has been routed to the heater location in accordance with the National Electrical Code and local codes, the heater is now ready for the heater to be connected to the branch circuit.

WARNING

Risk of Electric Shock or Fire

Make sure electric power is disconnected at main electrical panel before attempting to connect heater to branch circuit. Verify branch circuit voltage is same as noted on heater nameplate. Connecting heater to a voltage greater than the heater nameplate rating could damage the heater and cause a fire.

Heater is provided with a 28.3mm hole into wiring compartment for routing of branch circuit conductors. Appropriate conduit and fittings must be provided for correct and safe installation.

1. Remove the field wiring cover located on bottom of heater by removing one screw. See Figure 8 and Figure 9 for reference.
2. Bring branch circuit conductors to heater and into hardwire according to right position. Install appropriate cable fitting into the heater as shown in Figure 10 and Figure 11.
3. Following the wiring diagrams in Figure 12 connect the supply wiring to the heater lead wires inside the wiring compartment.
   - Green pigtail – connect to earth ground
   - Black pigtails – connect to branch circuit power
4. Replace wiring box cover with two screws previously removed.
5. Adjust louvers to desired position; louvers are designed so that they cannot be completely closed. Do not attempt to defeat this safety feature.

Figure 8: Wiring cover located at bottom of heater

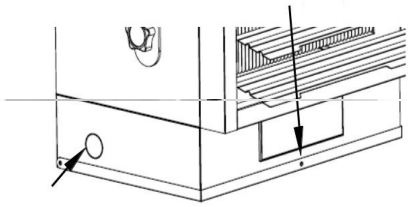

Figure 9: Removing wiring cover exposes wires

Connect the hardwire as shown.

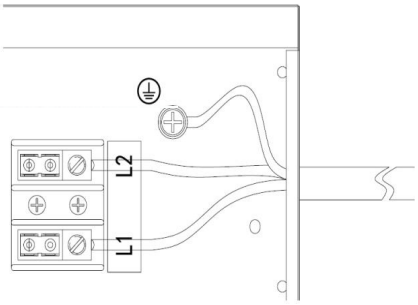

Figure 10: Setup conduit wires

Figure 11: Installing cable fitting to heater

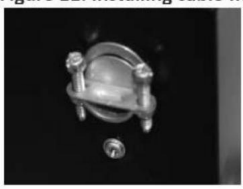

Install appropriate cable clamp or fitting for supply being used.

Feed cable into fitting and clamp as shown leaving approximately 2" of cable inside heater for wire connections

WIRING INSTRUCTIONS

Model No.: BGP2102-50R

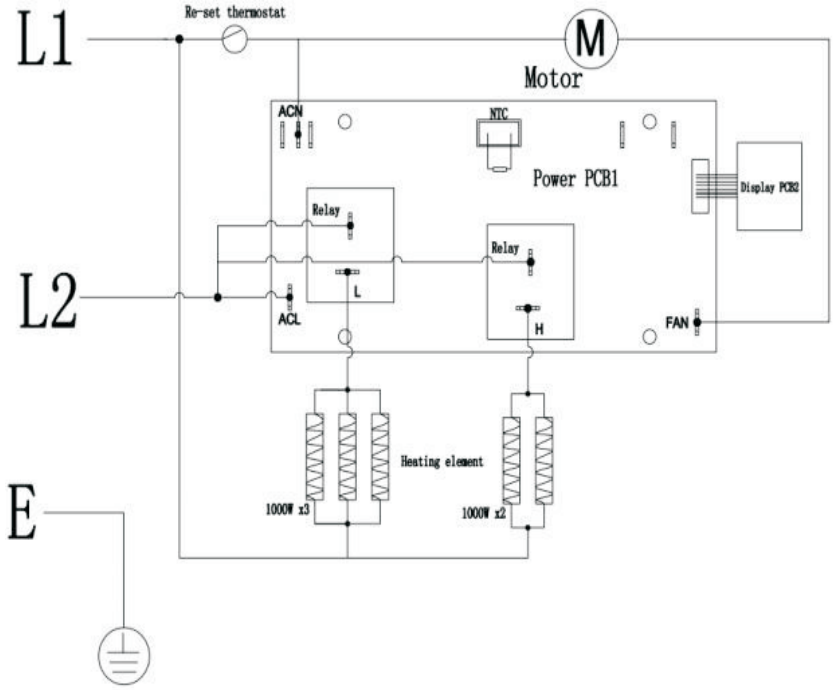

Model No.: BGP2102-75R

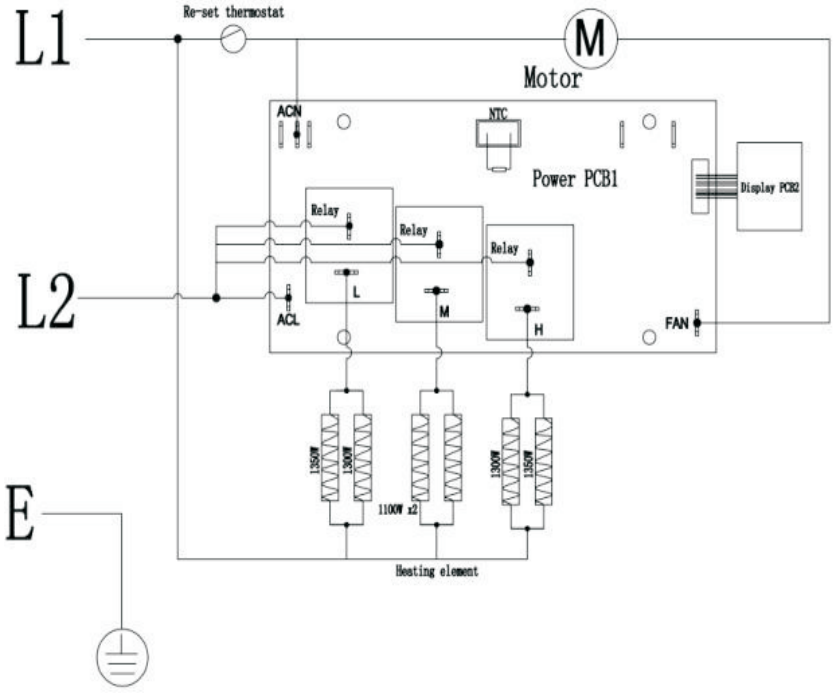

WIRING INSTRUCTIONS

Model No.: BGP2102-100R

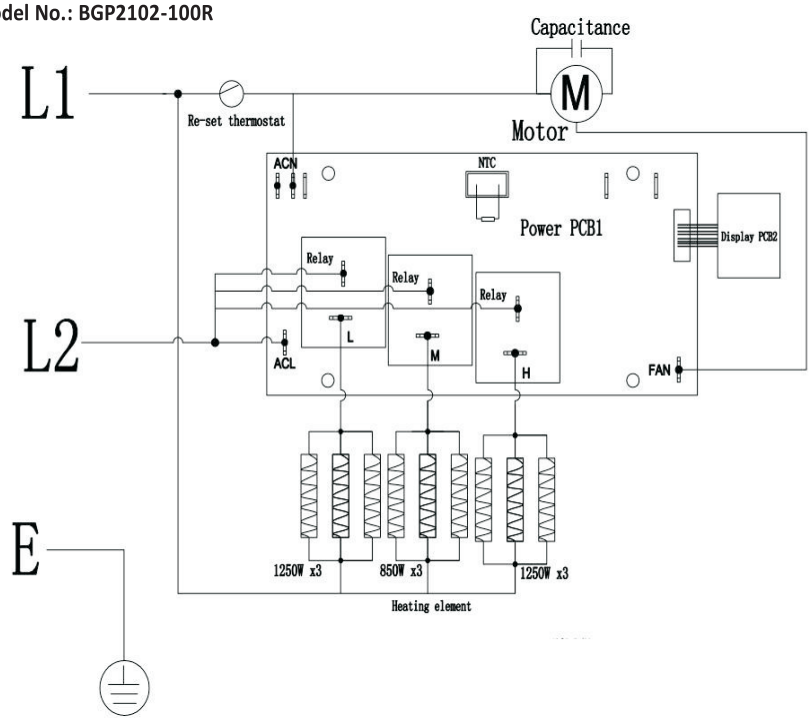

⚠ WARNING ⚠

THIS APPLIANCE MUST BE GROUNDED!
THE APPLIANCE MUST CONNECT TO A CURRENT PROTECTION CIRCUIT OR DEVICE AT 50AMP OR LESS BEFORE BEING CONNECTED TO POWER SUPPLY!

NOTE: All wiring must be carried out by a Certified Electrician and must be in accordance to national and local electrical codes. For certain applications, conduit may be required, See Figure 2. Check local electrical codes. If you run the wiring in conduit and wish to be able to turn the heater be sure to purchase enough flexible conduit to allow the heater to be turned.

⚠ WARNING ⚠

HIGH TEMPERATURES – RISK OF FIRE. KEEP FLAMMABLE MATERIALS, SUCH AS FURNITURE, PILLOWS, BEDDING, PAPERS, CLOTHES, ELECTRICAL CORDS AND CURTAINS AT LEAST 3 FT. (0.9 M) FROM THE FRONT AND TOP OF THE HEATER AND KEEP THEM AWAY FROM THE SIDES AND REAR. TO REDUCE THE RISK OF FIRE, DO NOT USE IT IN AREAS WHERE GASOLINE, PAINT OR FLAMMABLE LIQUIDS ARE USED OR STORED.

⚠ WARNING ⚠

TO REDUCE THE RISK OF FIRE, DO NOT STORE OR USE GASOLINE OR OTHER FLAMMABLE VAPORS AND LIQUIDS IN THE VICINITY OF THE HEATER.

OPERATING INSTRUCTIONS

Heater Control Panel:

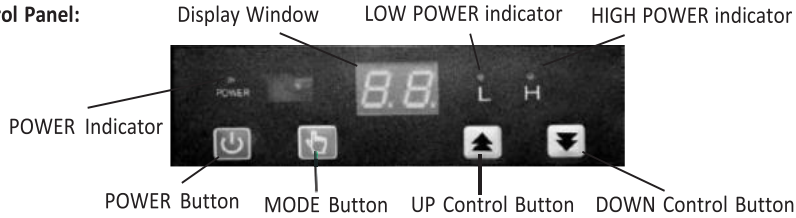

1. WARNING: The Heater must be properly installed before it is used.
2. Turn power supply to heater "ON" at main switch panel.
3. Once the heater has power, the red POWER light will be on.
4. Pushing the red POWER button will turn the heater ON and OFF. When this button is pressed, the heater and fan will immediately come on and the digital display will flash approximately 5 seconds.

a. If the room temperature is lower than 65°F, the heater will continue to run until the room temperature reaches 65°F and the heater will then cycle on and off to maintain approximately this room temperature.

b. If the room temperature is higher than 65°F, the display window will show 65 and flash 5 times and the heater and fan will stop.

5. **Adjusting Power Level**: While the unit is ON, push the MODE button once. This will activate the power selection mode and the red light over the "L" or "H" will be flashing to show the current setting. To change from High to Low or Low to High, use the UP or DOWN Arrow buttons. After approximately 5 seconds the control will then be programmed for the selected output.

Note: The unit has an Energy Saving system with a designed ECO program.To save energy, the heater will automatically adjust the power output to low power when room temperature is 2°F below the set point temperature.

6. **Adjusting temperature:** While the heater is ON, push the MODE button twice. This will activate the temperature selection mode and the digital display will flash with the current setting. To adjust, use the UP or DOWN button until the desired temperature shows on the display. After 5 seconds the display will change back to displaying the room temperature.

7. **Setting Time On Feature: Note:** If this feature is not selected, the heater will continue to operate to maintain the desired temperature. This feature allows the heater to operate for only a predetermined time. While the heater is ON, push the green mode button three times. This will activate the timer mode and the display will flash with "0H" . By pressing the UP or DOWN Arrow buttons, the display will show the number of hours the timer will allow the heater to remain on (1H-9H where 1H = 1 hour, and 9H = 9 hours). After 5 seconds, the controller will lock in the setting.

8. **Setting Fahrenheit/Celsius:** Hold on pushing the MODE button 3 seconds to change Fahrenheit to Celsius, and repeat this operation change Celsius to Fahrenheit.

9. **Once the controller has been programmed, the heater will cycle on and off to maintain the desired room temperature. To help extend the life of the heater, after the heater has reached the desired temperature and the controller turns off the heating element, the fan will continue to operate for approximately 180seconds to cool down the heater. This fan delay off feature also occurs when the heater POWER button is pushed to turn off the heater while it is heating. The fan will continue to run to cool down the heater.**

10. To turn off the heater, push the red POWER button. If the heater is operating, the heater will turn off, but the fan will continue running for approximately 180 seconds to allow the heater to cool.

OPERATING INSTRUCTIONS

NOTE: The first time you operate the unit, it may smoke slightly. This is due to the residual cleaning agents used to clean the element when the heater is manufactured. This is normal and does not indicate a problem with the unit. This condition will stop after the heater has been in operation for a few minutes.

Automatic Thermal Limit: This heater is equipped with a thermal limit which will automatically shut off the heater in the event of overheating. The display and indicator light will be off in the event of overheating. The cause of the overheating should be determined before further operation. Should the unit overheat and activate the thermal limit, to return heater to operating mode will require user to press power button on remote or heater after allowing the heater to cool for 20-40 minutes user must reset control to desired wattage output and room temperature. Do not continue to use heater if it repeatedly overheats to cycle the safety thermal limit as this could lead to permanent damage to heater or a fire.

The buttons of the remote control correspond to the button functions of the control panel (except the function of long press).

Automatic Fan Delay: The heater is provided with an automatic fan off delay. As the room ambient reaches the preset temperature level of the heater control will de-energize the heating element within the heater while the fan continues to run for approximately 180 seconds to allow the heater to cool.

MAINTENANCE

USER CLEANING INSTRUCTION:

1. Turn off power to heater
2. After the heater has cooled, a vacuum cleaner with brush attachment may be used to remove dust and lint from exterior surfaces of the heater including the grille opening. Compressed air may also be used to blow out dust from inside heater.
3. With a damp cloth, wipe dust and lint from grille and exterior surfaces. Be careful not to let the water enter the inside of appliance.
4. To protect the enclosure, don't splash water onto the heater, and never use solvents to clean the heater.
5. Return power to heater and check to make sure it is operating properly.

Maintenance Cleaning Instructions:

(To be performed only by Qualified Service Personnel)

At least annually, the heater should be cleaned and serviced by a qualified service person to assure safe and efficient operation. After completing the cleaning and servicing, the heater should be checked for proper operation.

The remote control is powered by 2 AAA batteries. These should be replaced periodically or at least annually.

TROUBLESHOOTING & WARRANTY

PROBLEM	DISPLAY CODE	ROOT CAUSE	CORRECTIVE ACTION
Unit is not heating	Display shows"E1"	The thermostat sensor is broken or disconnected.	Please call customer service.
	Display shows " " Nothing and indicator lights off	The overheat protection has activated.	Inspect the garage heater and check that the air inlets and outlets are not blocked as this may cause overheating. Switch off the circuit breaker to the garage heater for at least 30 minutes and allow it to cool down. Turn the power back on and operate.
		The overheat protection has activated and already cooled.	Switch off the circuit breaker to the garage heater then turn the power back on and operate.
	The heater will not start	The room temperature has already reached the set thermostat temperature	Adjust the temperature setting to make sure the thermostat setting temperature is higher than current room temperature.
	The heater will not start	The breaker has tripped	Rest the breaker at the fuse panel and restart the heater
Garage heater emits a burning smell		During production dust and/ or oil debris gathered on heating coils.	Make sure the room is well ventilated. Allow the garage heater to run until the smell is dissipated.
		Check and make sure there is no combustible material within 0.9 meters (3 feet) of the garage heater.	Remove the combustible material around the garage heater.
		This heater must be mounted at least 8 feet off the floor, for specific clearances, please check the " LOCATING HEATER" section in the instruction manual	Relocate the garage heater so there is enough space between the heater and adjacent wall and floor.

TROUBLESHOOTING & WARRANTY

WHAT IS NOT COVERED:

1. Damage caused by misuse or use contrary to the owner's manual and safety guidelines.
2. Damage caused by a lack of normal maintenance.
3. Repair by an unauthorized person.
4. Damage caused by connection to an improper voltage.
5. Damaged caused by use outdoors.

LIMITATIONS:

This warranty does not imply or assume any responsibility for consequential damages that may result from the use, misuse, or the lack of routine maintenance of this heating appliance. A cleaning fee and the cost of parts may be charged for appliance failures resulting from lack of maintenance. This warranty does not cover claims, which do not involve defective workmanship or materials. FAILURE TO PERFORM GENERAL MAINTENANCE (INCLUDING CLEANING) WILL VOID THIS WARRANTY.

THIS LIMITED WARRANTY IS GIVEN TO THE PURCHASER IN LIEU OF ALL OTHER WARRANTIES, EXPRESSED OR IMPLIED, INCLUDING BUT NOT LIMITED TO THE WARRANTIES OF MERCHANTABILITY OF FITNESS FOR A PARTICULAR PURPOSE. THE REMEDY PROVIDED IN THIS WARRANTY IS EXCLUSIVE AND IS GRANTED IN LIEU OF ALL OTHER REMEDIES. IN NO EVENT WILL WORLD MARKETING OF AMERICA BE LIABLE FOR INCIDENTAL OR CONSEQUENTIAL DAMAGES.

Some states do not allow limitations on how long an implied warranty lasts, so the above limitation may not apply to you. Some states do not allow the exclusion or limitation of incidental or consequential damages so the above limitation or exclusion may not apply to you.

For your record, staple your sales receipt to this manual and record the following

DATE OF PURCHASE:_____

PLACE OF PURCHASE:_____

SERIAL NUMBER:_____

MODEL NUMBER:_____