INSTRUCTION MANUAL

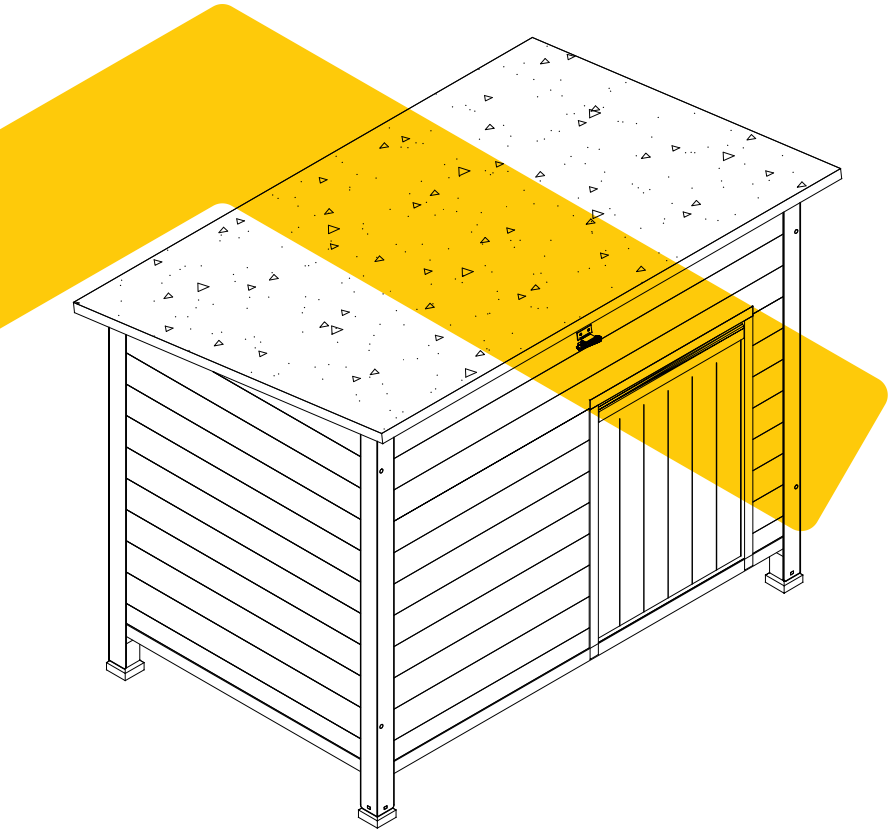

NOTICE

Please retain these instructions for future reference.

- Firmly secure all bolts,screws and knobs before use.
- Reconfirm that all bolts,screws,and knobs are secure every 90 days.
- Fasten screws loosely during initial assembly. Do not fully tighten screws until the item is completely assembled.
- Do not use or store this item in the proximity of open flame or flammable/combustible chemicals.
- Be aware that some parts are heavy and have sharp edges.
- Be aware that moving parts can injure,crush and cut.
- If any parts are missing,broken,damaged,or worn,stop using this product until repairs are made and/or factory replacement parts are installed.
- Do not use this item in a way inconsistent with the manufacturer's instructions as this could void the product warranty.

TOOLS REQUIRED



PHILLIPS
SCREWDRIVER

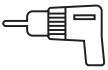

DRILL
(RECOMMENDED)



2PERSON
ASSEMBLY



APPROXIMATELY
30MIN. ASSEMBLY

HARDWARE

M6.0x30mm SCREW
8PCS



P1

M3.5x45mm SCREW
2PCS+1spare



P2

M3.0x18mm SCREW
6PCS+1spare



P3

M3.0x14mm SCREW
10PCS+1spare



P4

M3.0x12mm SCREW
4PCS+1spare



P5

Hinge
2PCS

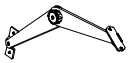

P6

Lock
1PC

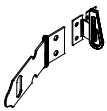

P7

PARTS

Rear left side iron parts
1PC



A

Rear right side iron parts
1PC



B

Foot pad
4PCS

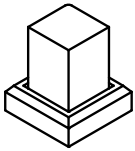

C

Back panel
1PC

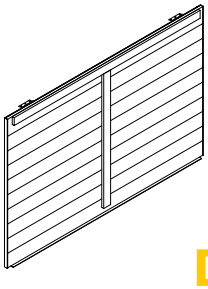

D

Left pane
1PC

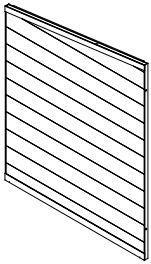

E

Right pane
1PC

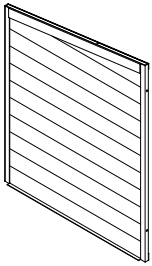

F

Front panel
1PC

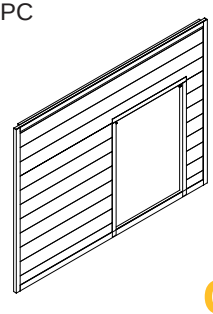

G

Curtain
1PC

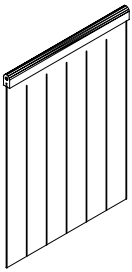

H

Front left side iron parts
1PC



I

PARTS

Front right side iron parts
1PC



J

Positioning block
2PCS

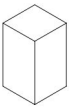

K

Bottom floor
2PCS

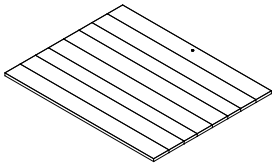

L

Roof
1PC

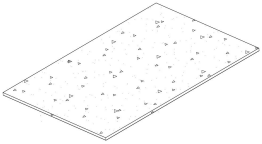

M

PRODUCT ASSEMBLY

01

Attach the plastic feet Part C to the metal bars Part A & B with the buckle.

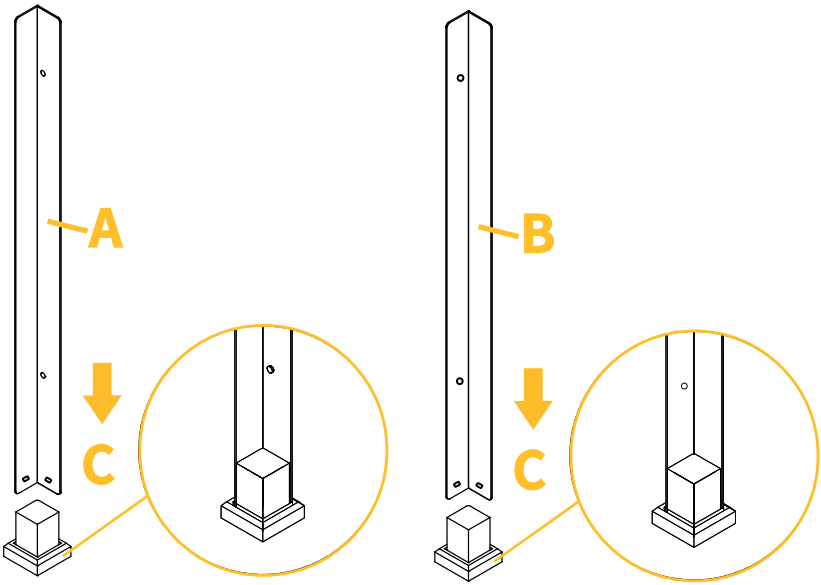

02

Attach the panel Part D, E , F with the metal bars Part A & B by 4xP1 screws.

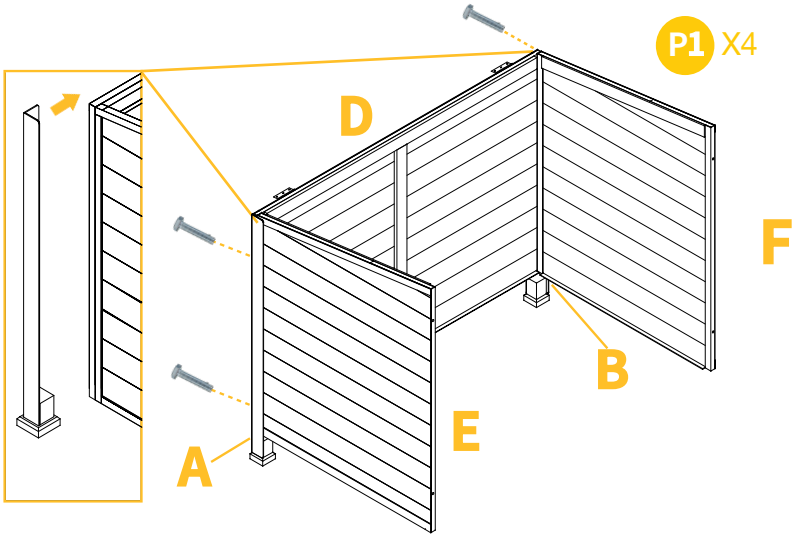

PRODUCT ASSEMBLY

03

Fasten the curtain part H to the front panel part G.

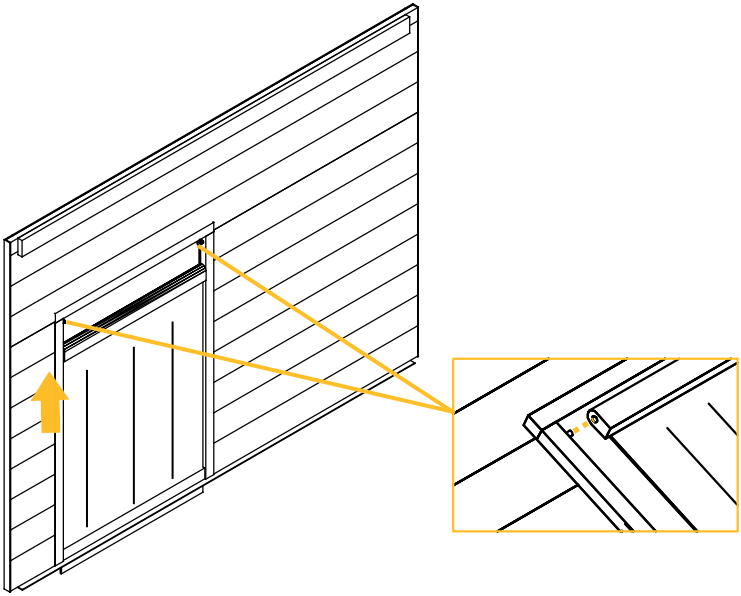

04

Attach the plastic feet Part C to the metal bars Part I & J with the buckle.

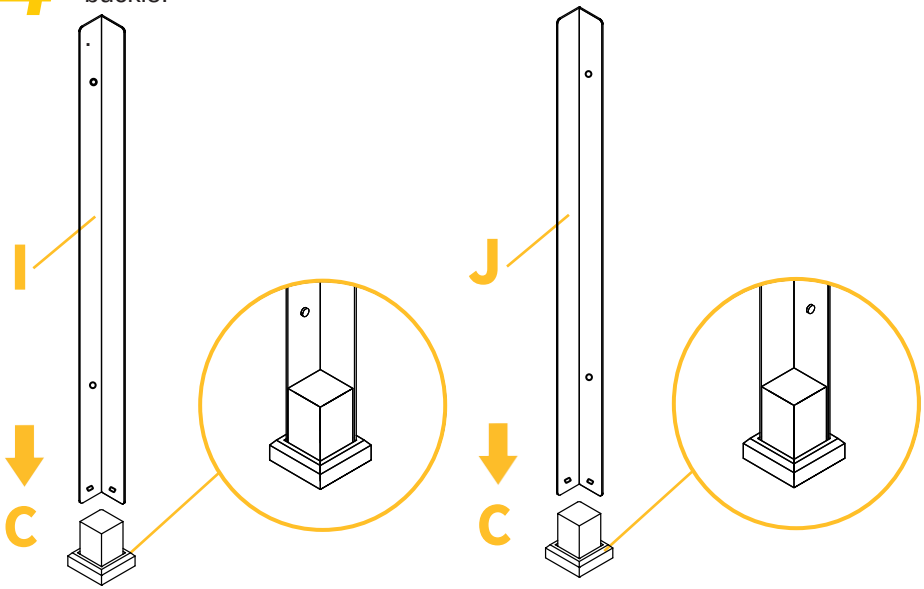

PRODUCT ASSEMBLY

05

Attach the Part I to the house with the metal bars Part J & L by 4XP1 screws.

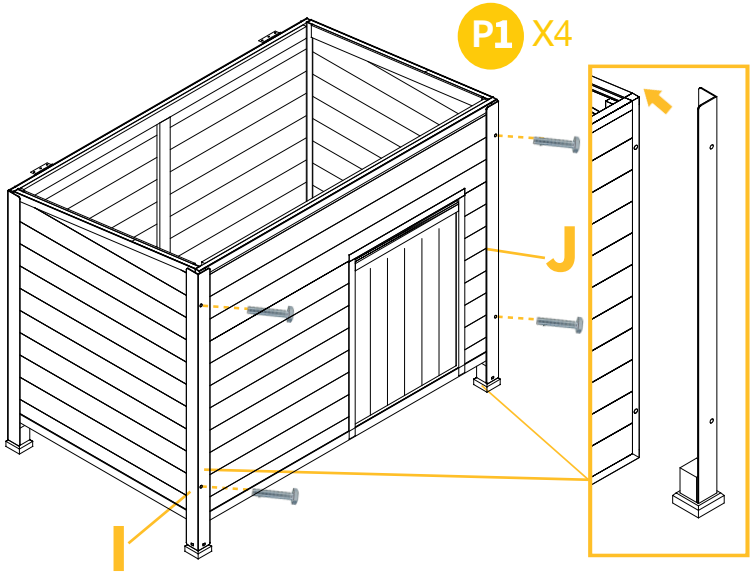

06

①Attach the bottom pad Part K to the side of bottom floor left Part L by 1XP2 screws.

② Attach the bottom pad Part K to the side of bottom floor right Part L by 1XP2 screws.

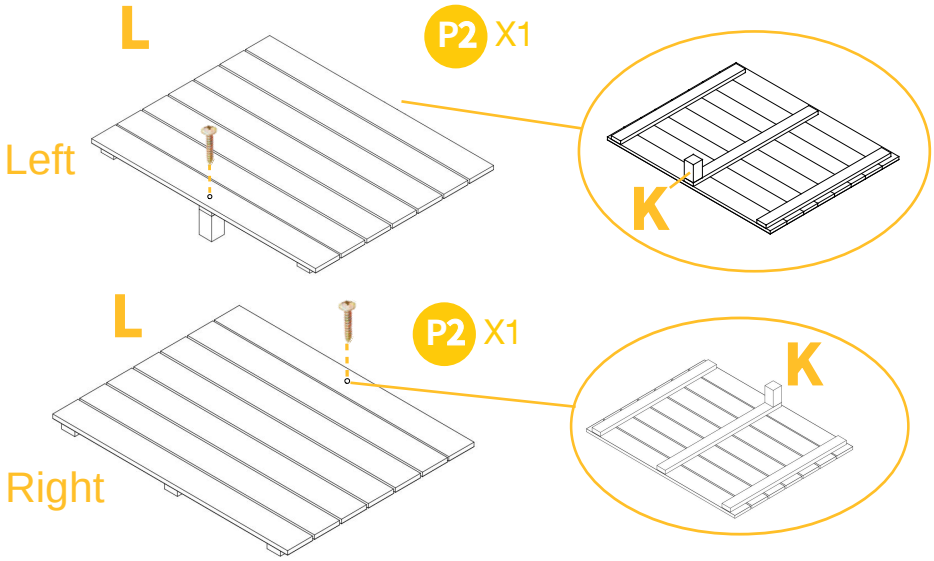

PRODUCT ASSEMBLY

07

Put down the left bottom floor first,and then put down the right bottom floor,finally connect the bottom floor with bottom pad Part L.

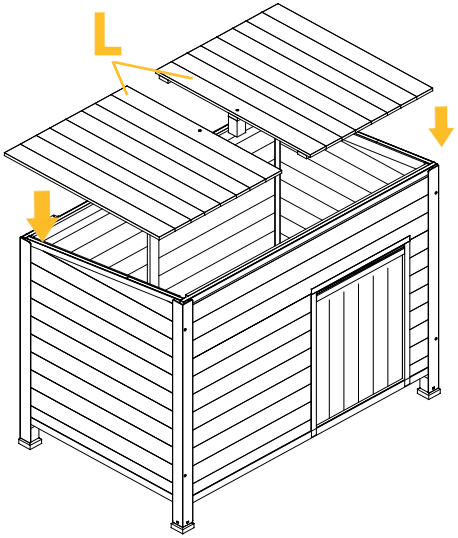

08

Screw the roof Part M on asphalt part from bottom by 6xP3 screws.
Notice: The roof edges of back are relatively flat，pls pay attention the Position.

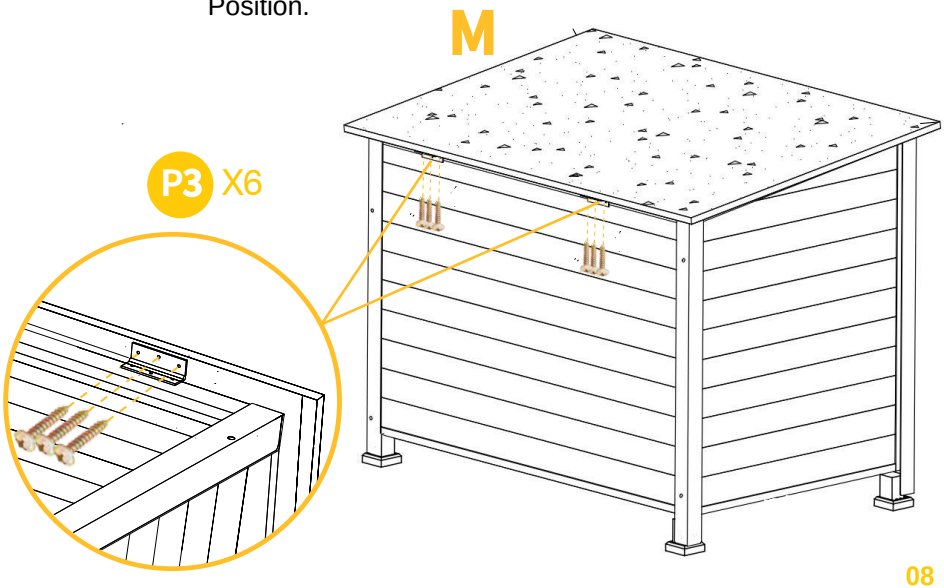

PRODUCT ASSEMBLY

09 Screw the roof hinge P6, one side to the roof by 4xP4 screws,P6 on the other side to the side panel by 4xP4 screws in left and right sides.

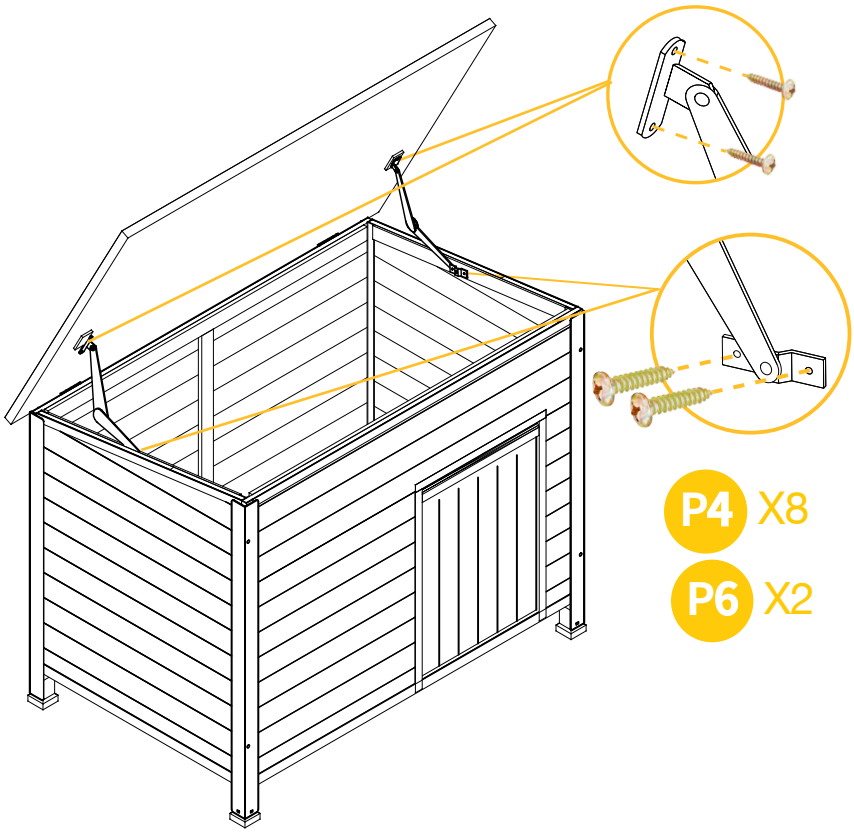

PRODUCT ASSEMBLY

10

Pls reference below 4 steps to screw the lock P7.

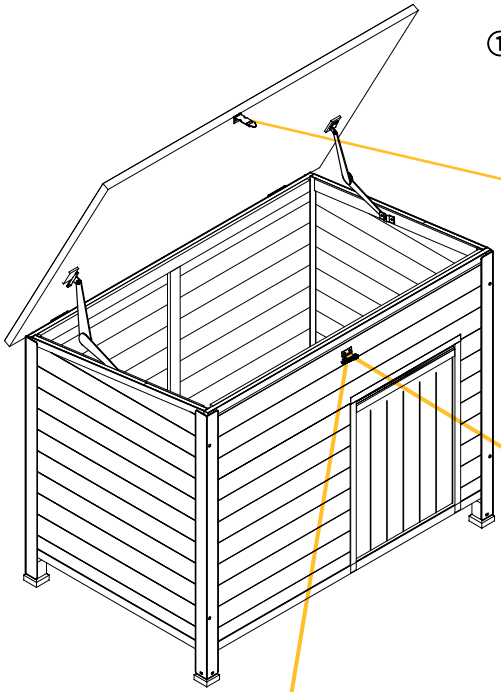

① **Pls exact locate the pre drilled holes on the roof side to screw the part of lock by 2xP4.**

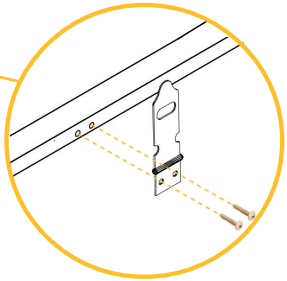

P4 X2

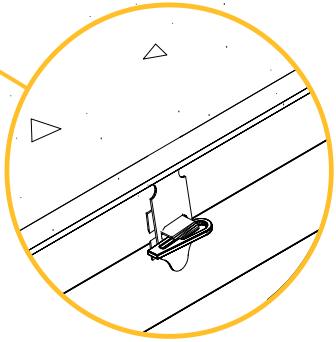

② **Close the roof to mark the exactly position of the matched lock on front panel.**

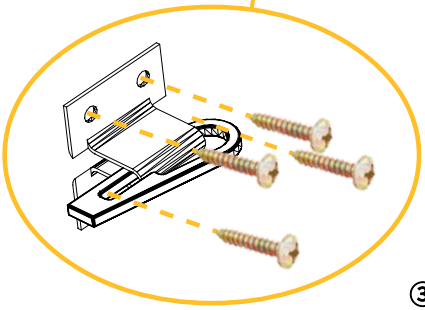

③ **Screw the matched lock to the front panel in mark position by 4xP5.**

④ **Close roof to make sure the 2 sides lock can match to work well. If not ,pls re-screw and adjust.**

P7 X1

Finish P5 X4