Sofa

Assembly Instruction – Please keep properly for future reference.

If you find any missing boxes, damaged parts, or accessory shortages, please contact the customer service team of your purchasing channel immediately. We will resolve the issue as quickly as possible.

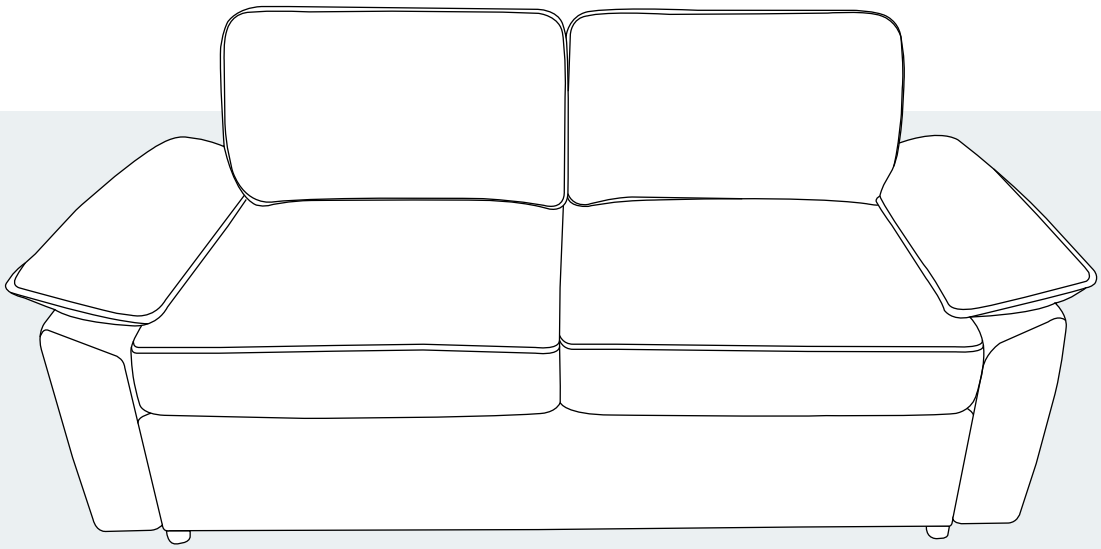

CONTACT US

- **Email: service@grandtunnel.com**
  In order to receive assistance more quickly, please provide

THE FOLLOWING INFORMATION:

- Order number
- Purchase platform
- Purchase date
- Detailed description of the issue along with photos (if applicable)

Important – Please read these instructions carefully before starting the installation.

EN

EN

Before Assembly

Thank you for choosing our product!
To ensure a smooth installation process, please read this guide carefully to familiarize yourself with the required tools, materials, and installation steps.
Follow the relevant sections to avoid any damage caused by improper installation, and make sure to review all operation and safety guidelines for correct installation procedures.

Packaging Notice:

If you find any missing boxes, damaged parts, or accessory shortages, please contact the customer service team of your purchasing channel immediately. We will resolve the issue as quickly as possible.

Installation Information

- All information in this guide is based on the product's condition at the time of printing. We reserve the right to modify product features, packaging, or availability without prior notice.
- Before installing the furniture, ensure that all necessary electrical or environmental preparations are completed.
- This manual contains important instructions on installation, cleaning, and maintenance. Please read it thoroughly and keep it for future reference.

Pre-Installation Checklist

1. Carefully inspect the new product for any damage or defects.
2. Ensure installation is carried out on a clean, flat surface to maintain balance and stability.
3. Avoid prolonged exposure of the product to damp environments or direct sunlight.
4. Handle with care during installation. Use protective materials (e.g., soft pads) to prevent scratches.
5. For any questions or technical support, refer to the customer service guide and contact the seller's customer service.

Email : **service@grandtunnel.com**

Usage and Maintenance Recommendations

1. Clean furniture regularly to maintain hygiene and prevent bacteria growth. Use a damp cloth that has been wrung out to avoid scratching the finish.
2. Avoid contact with acidic or alkaline corrosive liquids.
3. Do not use unauthorized replacement parts. For replacement parts, contact the manufacturer or distributor.
4. Do not machine wash or rinse any part of this product with water.

Safety Warnings



1. Warning Labels:

Do not remove warning labels on the product or packaging, and always follow the related instructions.

2. Regular Inspections:

Regularly check all parts of the product to ensure they are correctly installed, undamaged, and all connectors are securely tightened.

3. Safe Use:

Do not play on or under the sofa, and strictly avoid jumping or any actions that may harm the sofa or users.

4. Rope Hazard:

Do not attach ropes, hooks, straps, or other unintended items to any part of the product.

5. Guide Preservation:

Retain this manual for future reference.

6. Supervisory Responsibility:

Safety is a shared responsibility between the manufacturer and the user. Always adhere to safety guidelines when using the product.

Disclaimer

We are committed to providing safe and reliable products. If you have any questions about this product or require additional support, please contact our customer service team. We are here to assist you.

EN

Customer Service Guide



Thank you for choosing our product! We are committed to providing you with excellent service. If you find any missing parts, damaged packaging, or product damage after receiving all packages, please follow the steps below to quickly contact our customer service team. We will do our best to resolve your issue.

1. Missing Parts

Verify Parts:

1. Refer to the “Parts List” in the manual to verify the name, specifications, and quantity of the missing parts.
2. Take a clear photo of the parts list and mark the missing parts with detailed information, e.g., “Missing 5 pieces of M6×30mm screws.”

Contact Us:

By Email:

Send an email to **service@grandtunnel.com**, with the subject line “Missing Parts Issue.” Include the following in the email:

- A description of the missing parts and a photo of the parts list.
- Order details (order number, purchase platform, purchase date).

2. Product or Packaging Damage

If it affects normal use:

Steps:

1. Take clear photos or videos showing the damaged parts and the extent of the damage (multi-angle shots are recommended).
2. Email the photos/videos along with order details to **service@grandtunnel.com**, with the subject line “Product Damage Issue.”

Resolution:

After verification, we will arrange for a replacement part, product exchange, or refund as quickly as possible.

Email : **service@grandtunnel.com**

If it does not affect normal use:

Steps:

1. Contact our customer service team (by email: **service@grandtunnel.com**).
2. Provide a description of the damage and include relevant photos or videos.

Resolution:

We will provide repair guidance or an appropriate compensation plan based on the specific situation.

Contact Us:

Customer Service Email: **service@grandtunnel.com**

Helpful Tips

To process your issue efficiently, please prepare the following information:

- Order details (order number, purchase platform, purchase date).
- Clear photos or videos.
- We are committed to providing quick and professional solutions, no matter the size of the issue, to ensure your satisfaction.

Thank you for your trust and support!
We hope you enjoy using our product!

Parts List

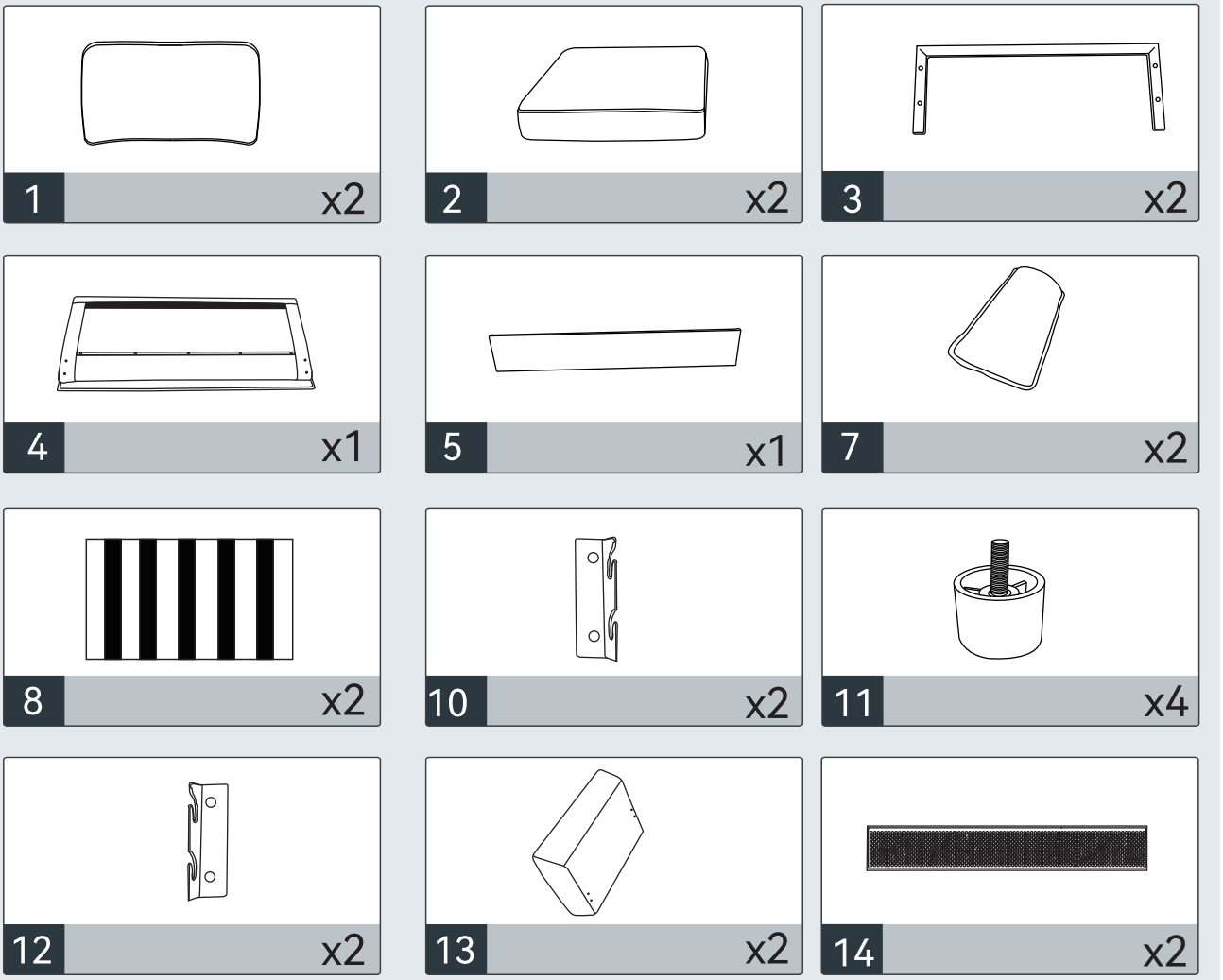

M8x18mm A x8	M8x30mm B x8
M8x22mm C x8	D x1

Email : service@grandtunnel.com

Combination Instructions

EN

Component Parts

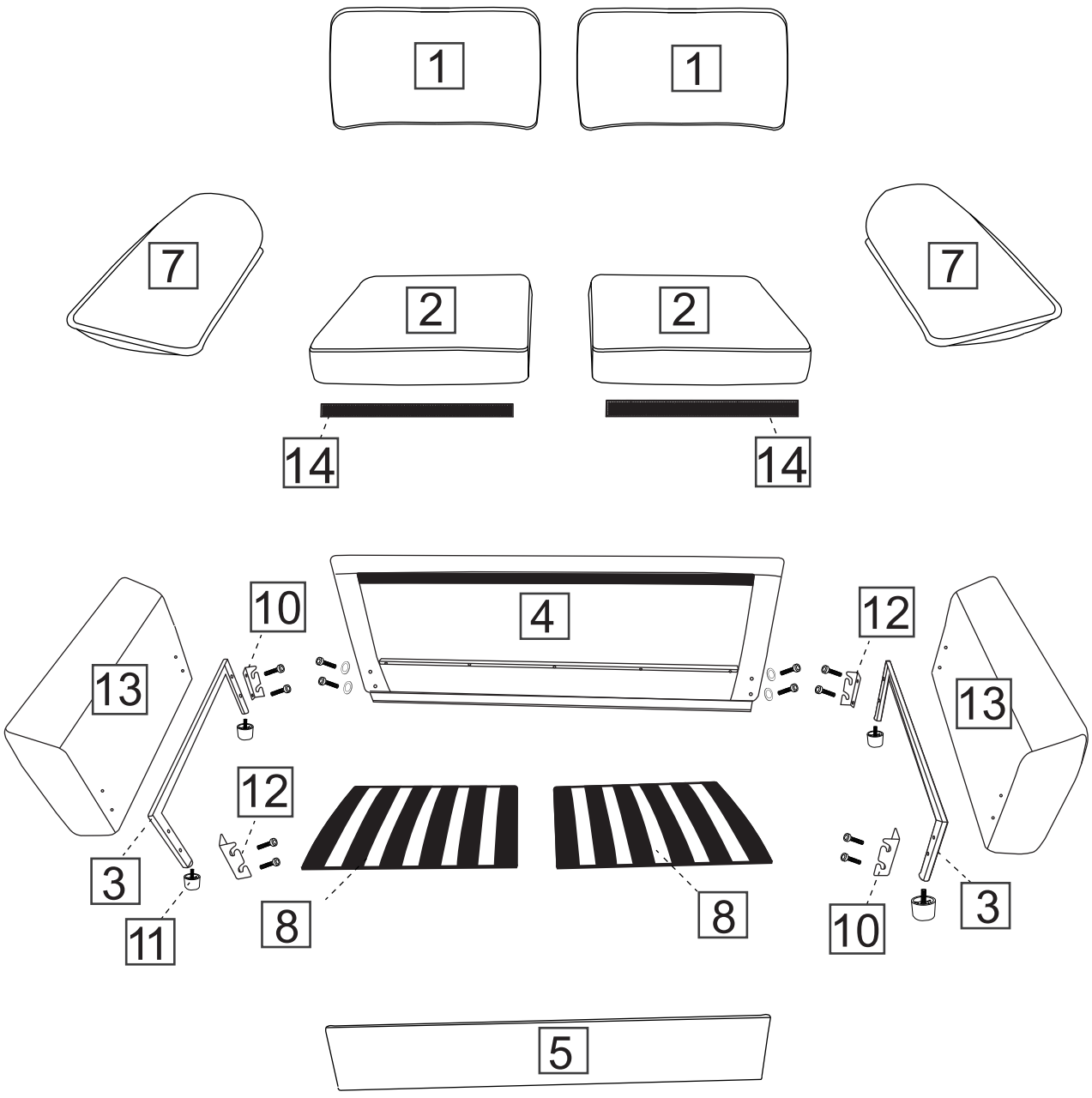

EN

Combination Instructions

Hardware

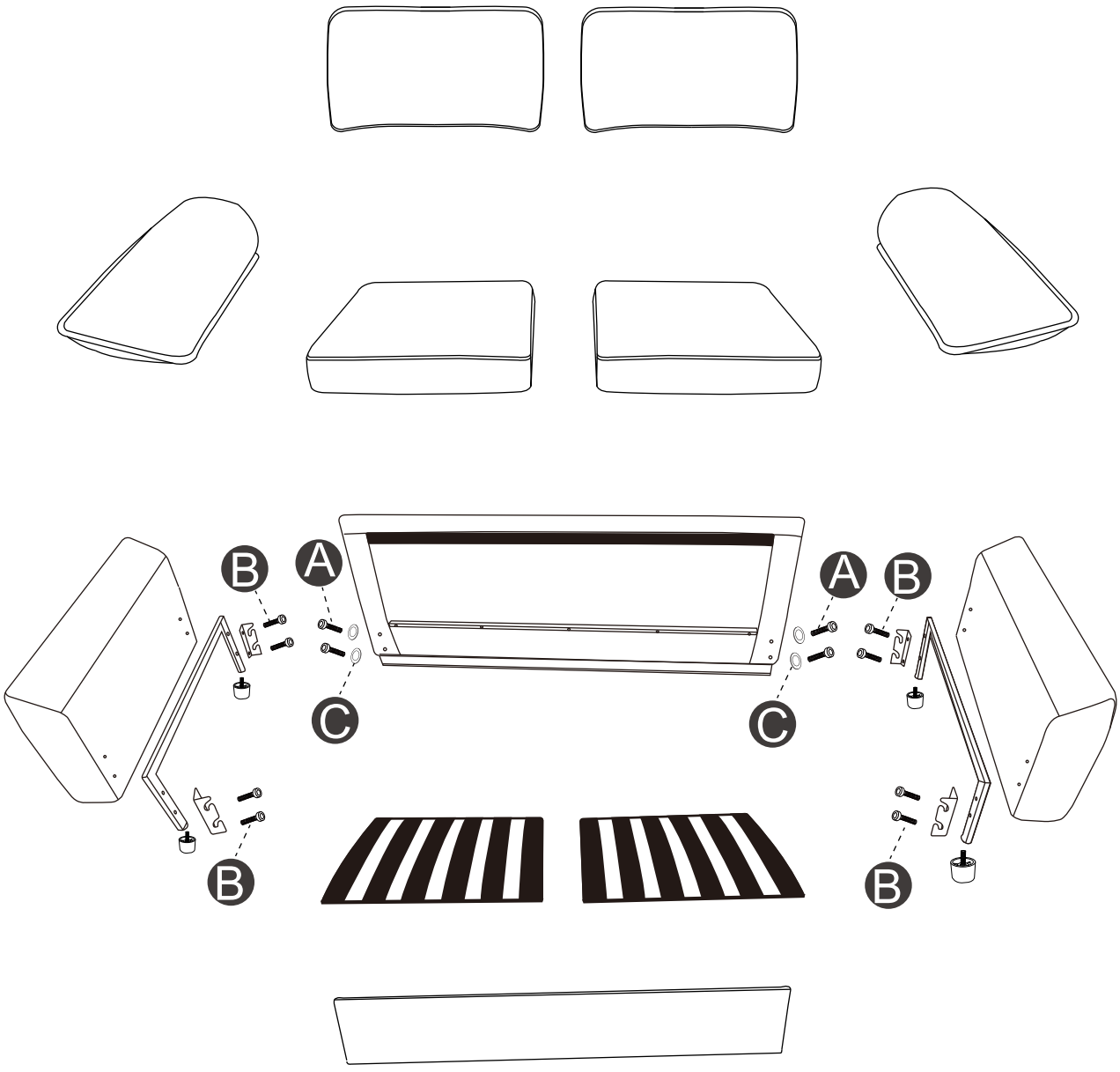

Email : **service@grandtunnel.com**

Assembly Instructions

EN

Important : Please read these instructions fully before starting assembly.

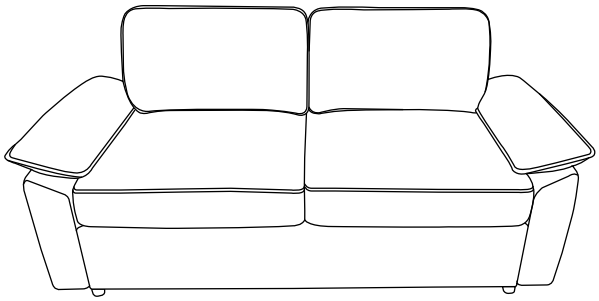

Before starting assembly, determine where the sofa will be placed and the orientation you want it to be.



2 people needed

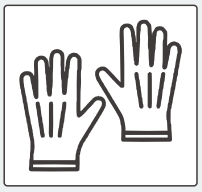

Work gloves



Tape measure

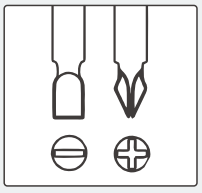

Other Tools Required
Phillips Screwdriver
(Not Included)

Simple Assembly Steps

1. Read the manual carefully.
2. Check all parts and hardware.
3. Prepare necessary tools.
4. Have at least 2 adults for assembly.

Please follow the instructions and use a sanitary napkin to protect the product during your assembly process.

Note:
1. The assembly should be done on a flat surface to maintain balance.
2. Do not tighten the screws before the assembly is complete.
To make the assembly process easier and better, two or more adults are needed.

EN

Safety and Care Advice

Important:
Please read these instructions fully before starting assembly.

Thanks for your purchase.
Before assembling, please follow the instructions to check if all the spare parts and screws are intact.

- Considering the size and weight of the sofa, we recommend 2 adults to assemble the sofa, on a carpeted or padded area, in the room that it is intended for. Approximate assembly time: 30 minutes.
- Please do not throw away any of the packaging or the instruction until all the components and hardware have been checked and the furniture is fully assembled. Please ensure that the packaging is disposed in a safe and environmentally friendly way.
- Keep all components and packaging out of reach of children or animals to avoid the risk of choking or suffocation.
- Please do not take off the cover, and do not wash.

Your cushions come vacuum packed and sealed for shipping. To restore the cushion's original shape, follow the steps below.

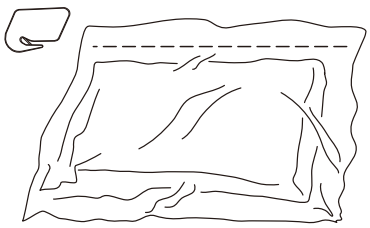

Open the vacuum bag carefully.

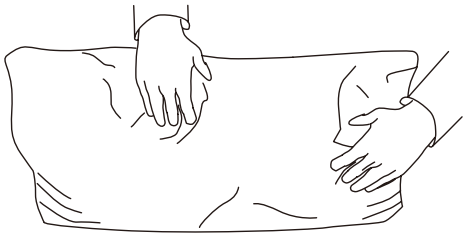

Press and tap with both hands from the side to fully inhale air.

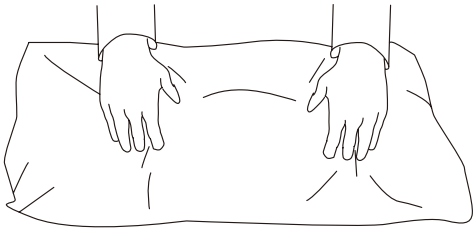

Press and tap with both hands from the front to fully inflate.

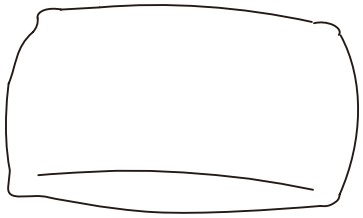

Carefully smooth out each section unti the surface is even.

After packing up, place them somewhere dry and ventilated.
After about 72-96 hours, it can be restored to the best-use condition.

Email : **service@grandtunnel.com**

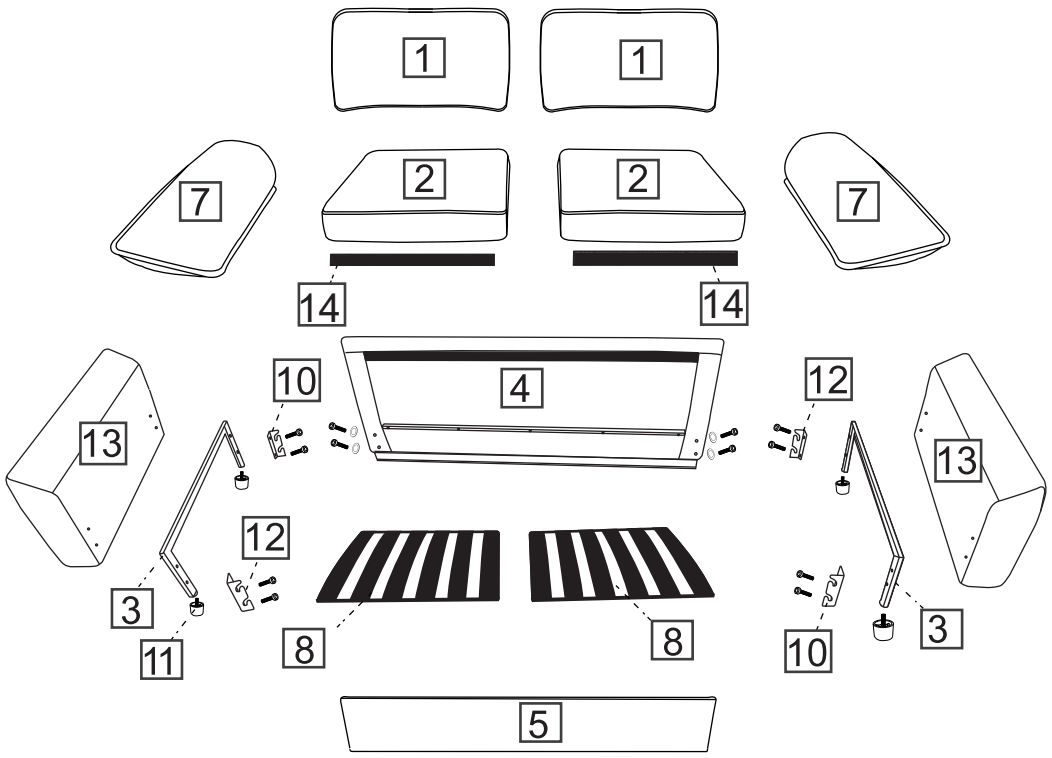

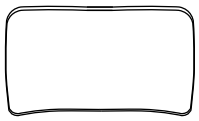	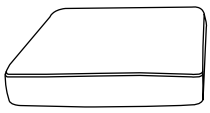		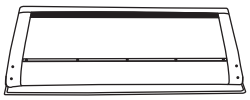
1 x2	2 x2	3 x2	4 x1
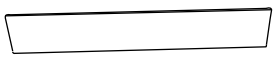		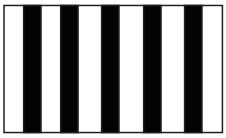	
5 x1	7 x2	8 x2	10 x2
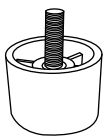		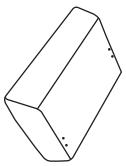	
11 x4	12 x2	13 x2	14 x2
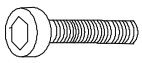			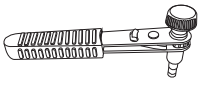
A M8x18mm x8	B M8x30mm x8	C M8x22mm x8	D x1

EN

Step 1

X2

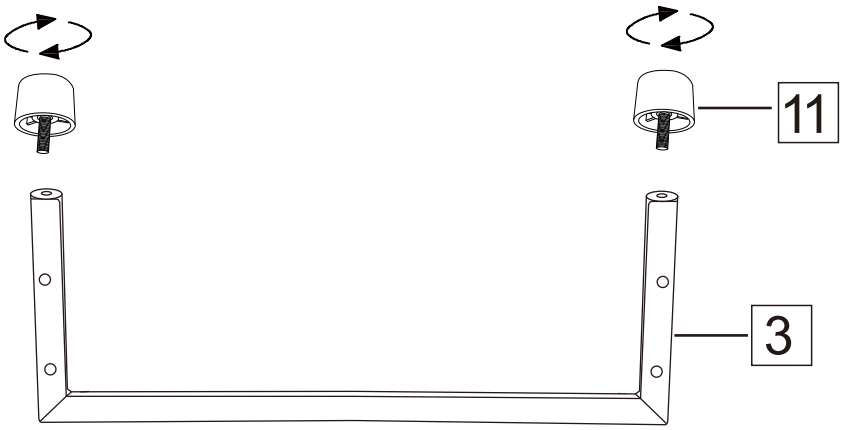

Take all parts out of the carton. Rotate part 11 and connect it to part 3.

Note: perform this step twice.

Step 2

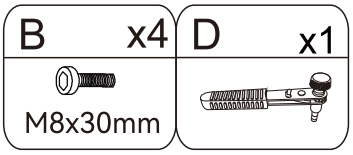

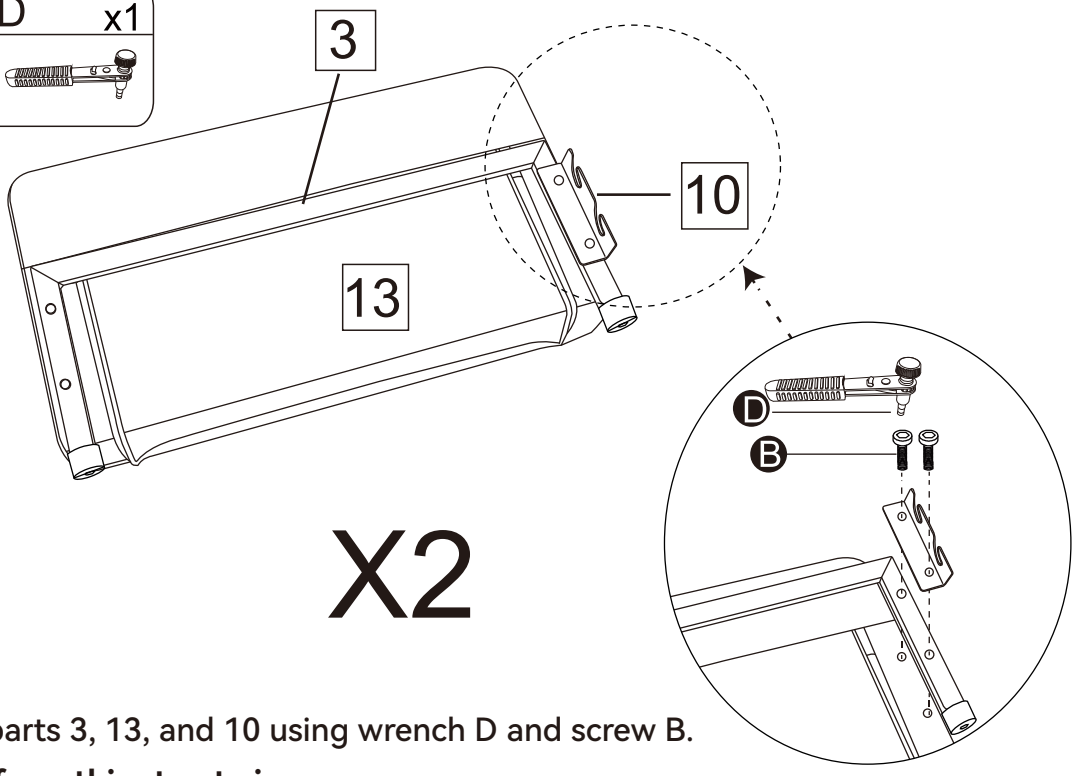

X2

Connect parts 3, 13, and 10 using wrench D and screw B.

Note: perform this step twice.

Email : **service@grandtunnel.com**

Step 3

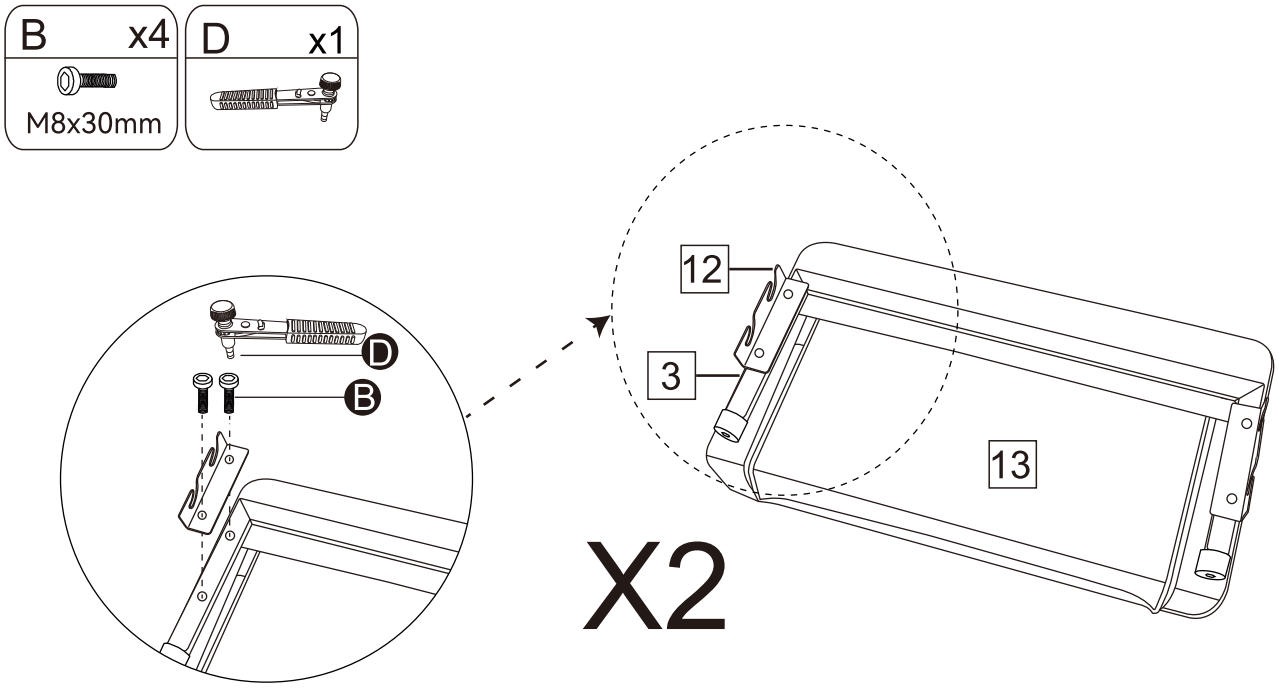

Connect parts 3, 13, and 12 using wrench D and screw B.

Note: perform this step twice.

Step 4

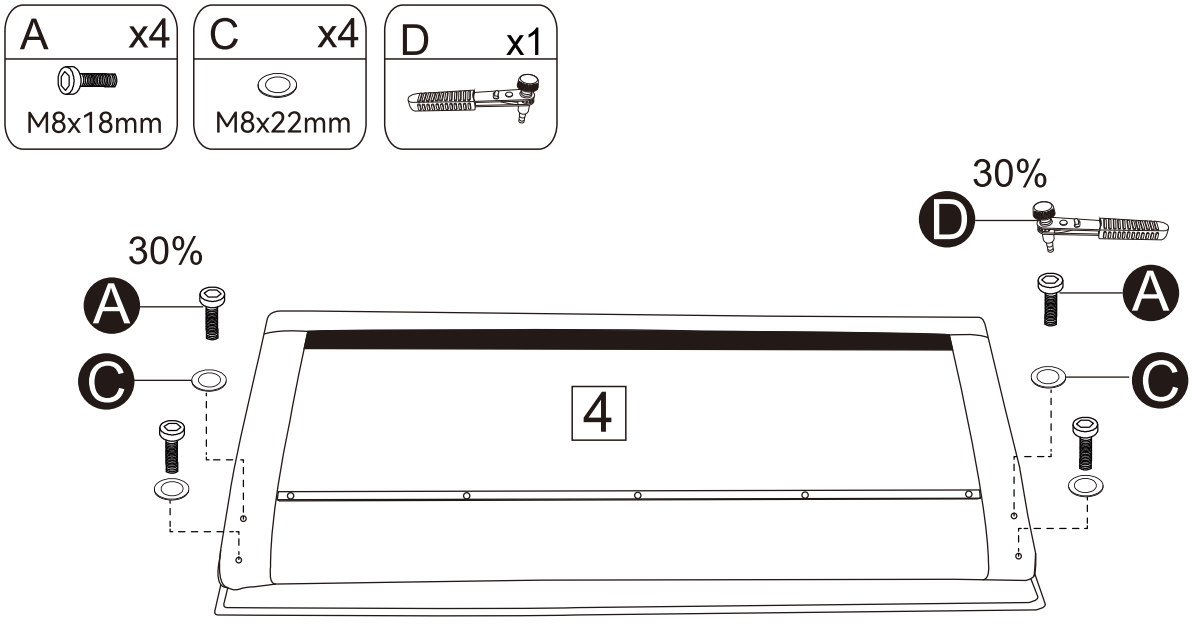

Connect part 4 using wrench D with screw A + washer C.

Note: tighten screw to 30%.

Step 5

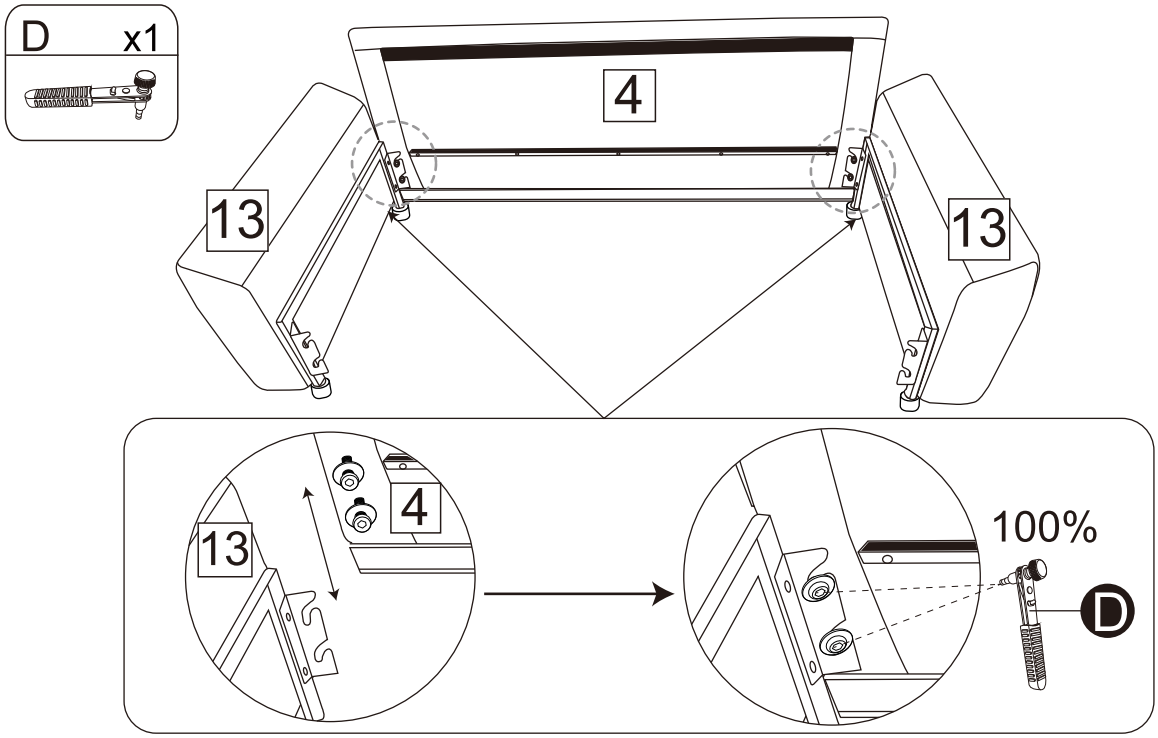

Hang part 13 onto the corresponding screw A on part 4, and tighten fully (100%) with wrench D.

Step 6

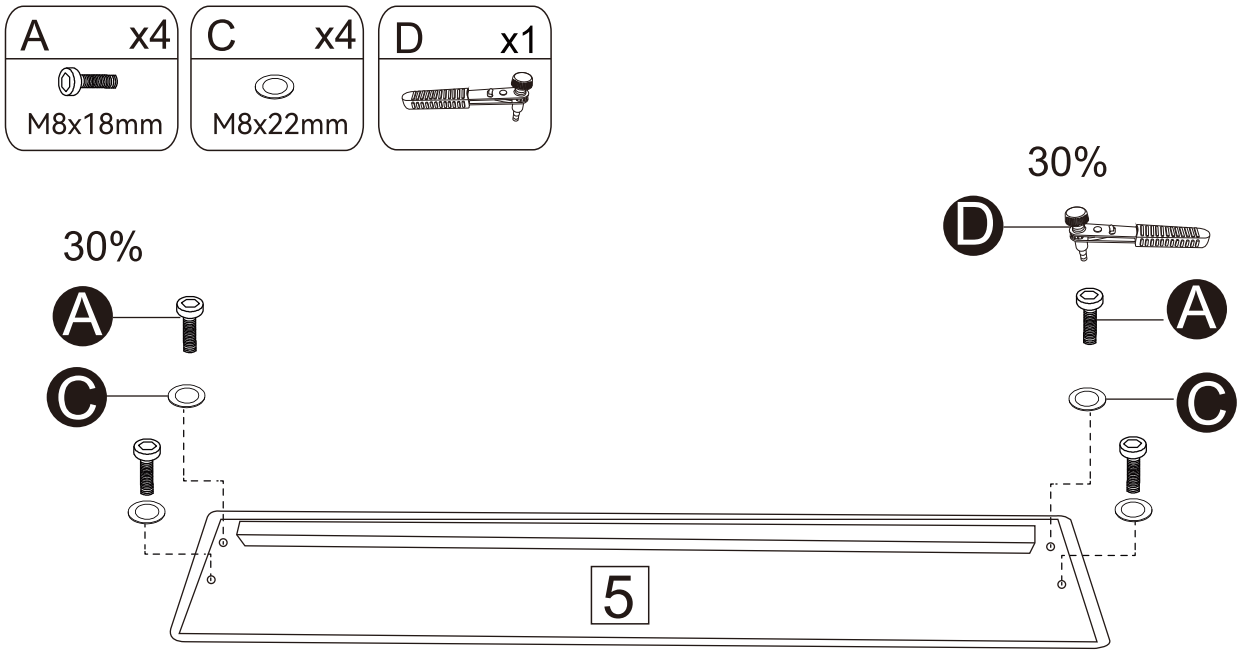

Connect part 5 using wrench D with screw A + washer C.

Note: tighten screw to 30%.

Email : **service@grandtunnel.com**

Step 7

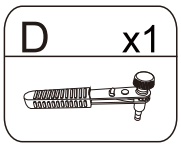

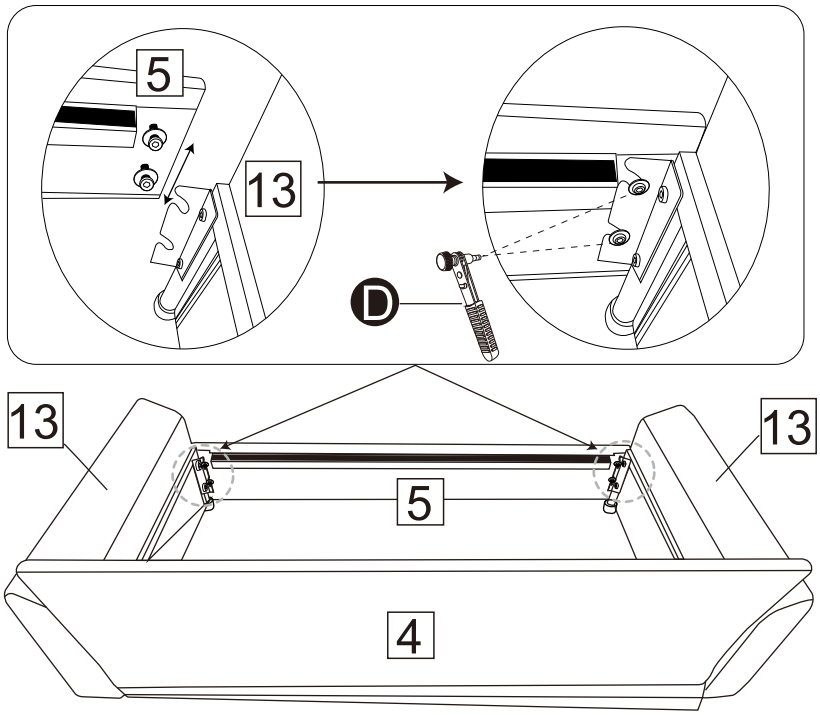

Hang part 13 onto the corresponding screw A on part 5, and tighten fully (100%) with wrench D.

Step 8

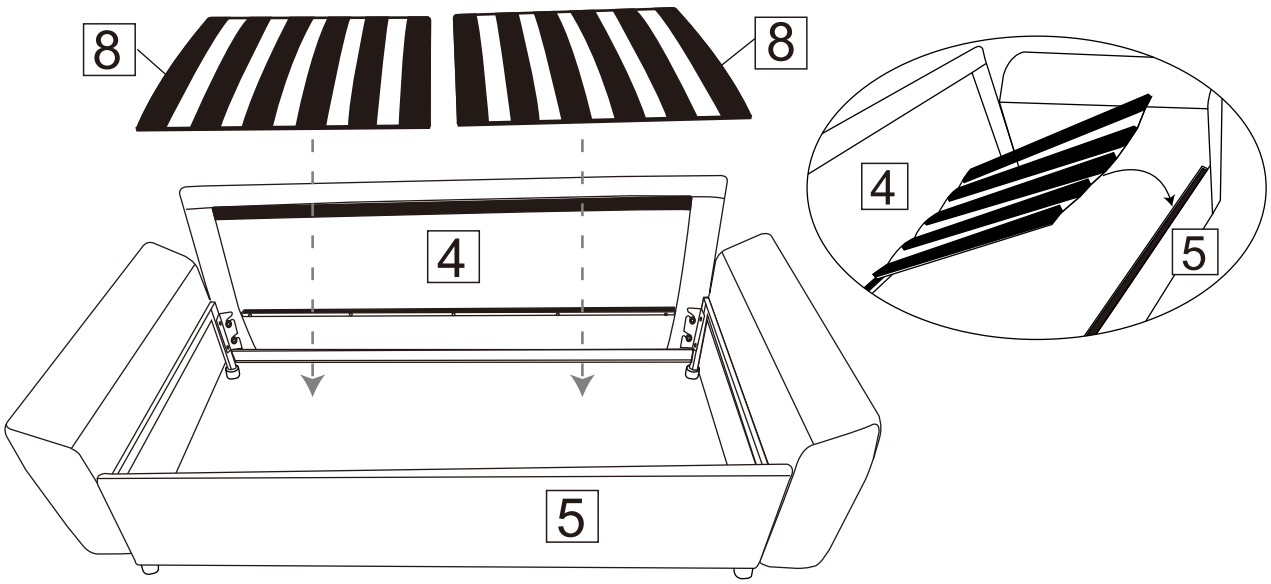

Place part 8 on parts 4 and 5; first stick it onto part 4, then onto part 5.

EN

Step9

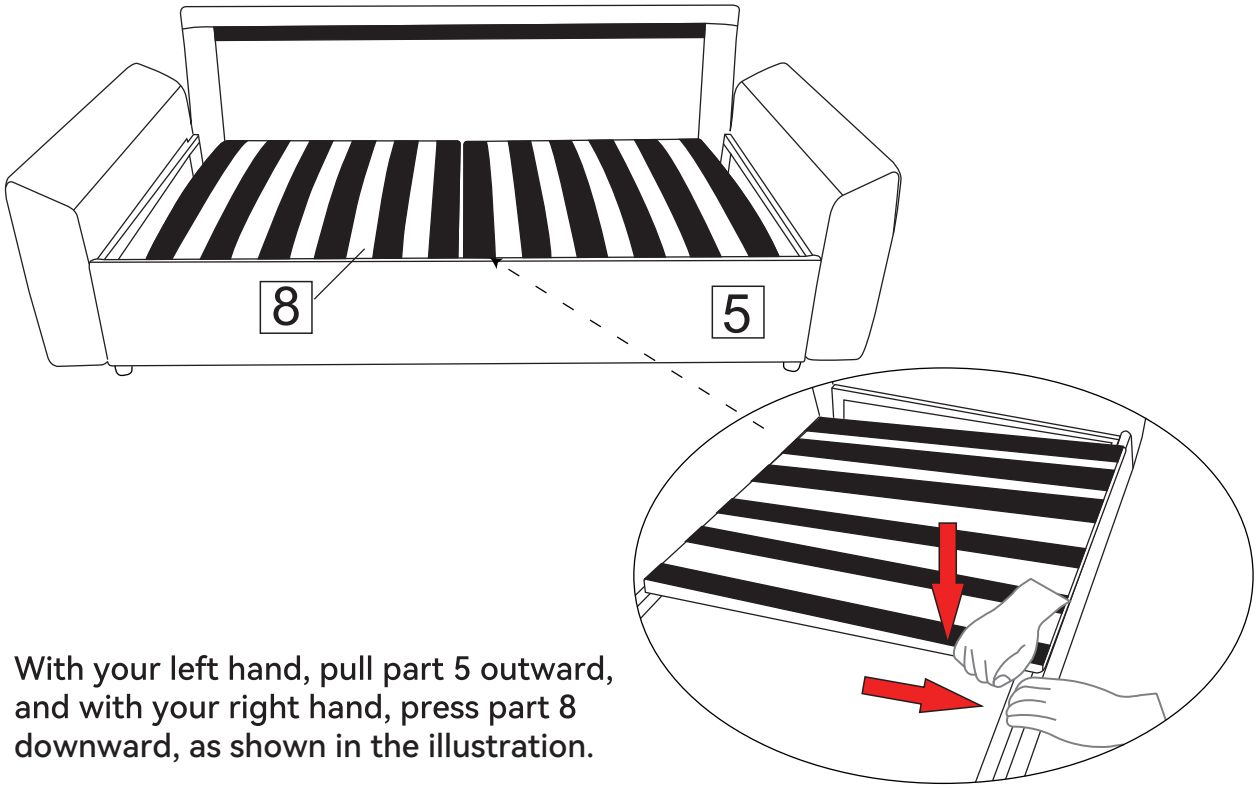

With your left hand, pull part 5 outward, and with your right hand, press part 8 downward, as shown in the illustration.

Step10

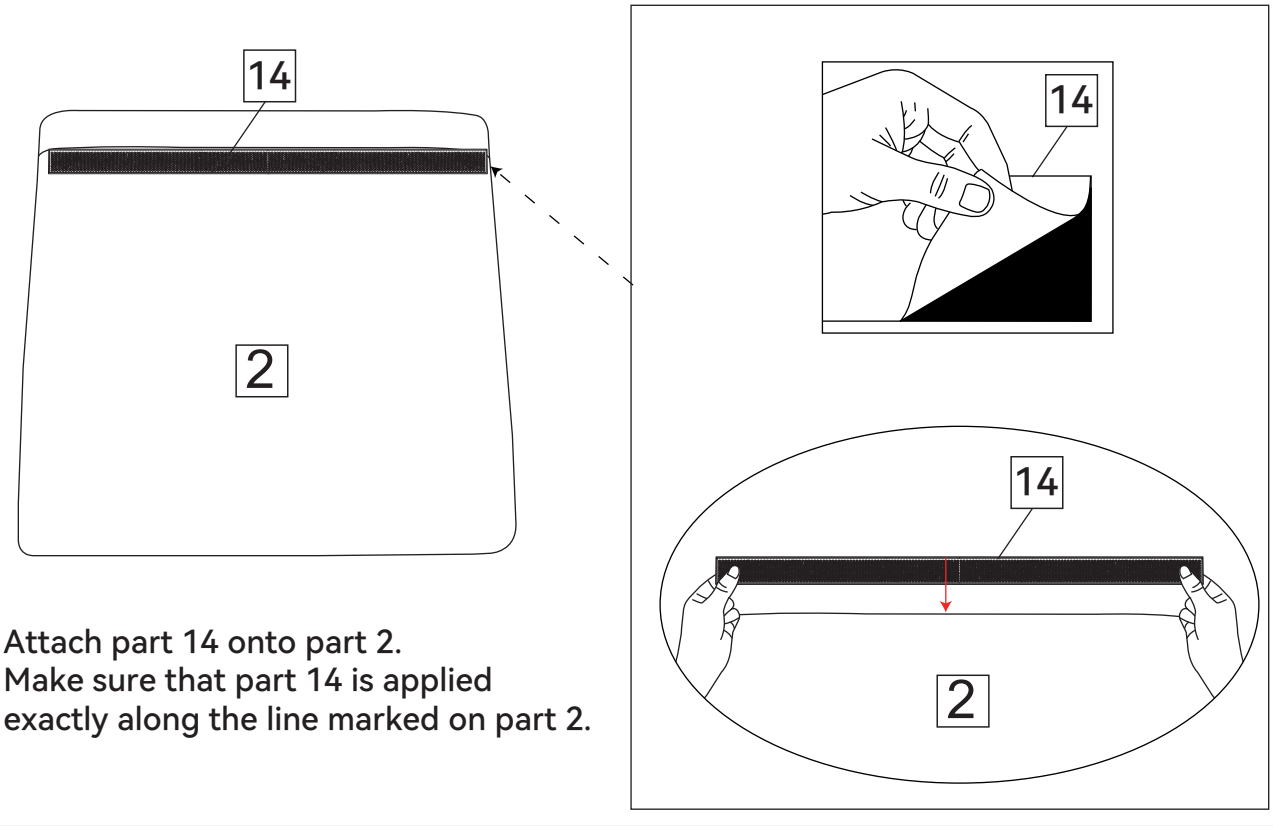

Attach part 14 onto part 2.
Make sure that part 14 is applied exactly along the line marked on part 2.

Email : service@grandtunnel.com

Step10

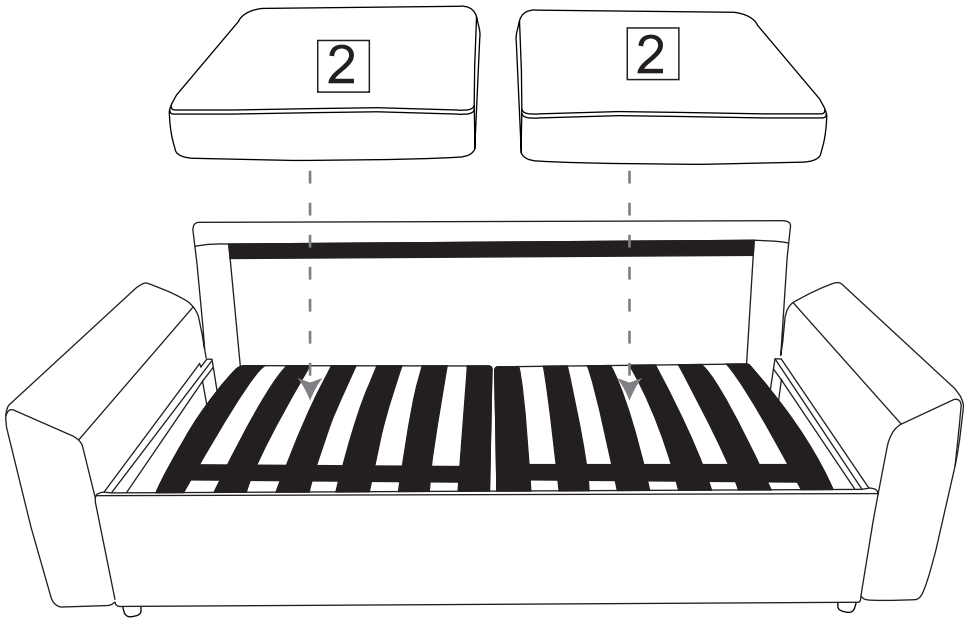

Place part 2 onto part 8.

Step11

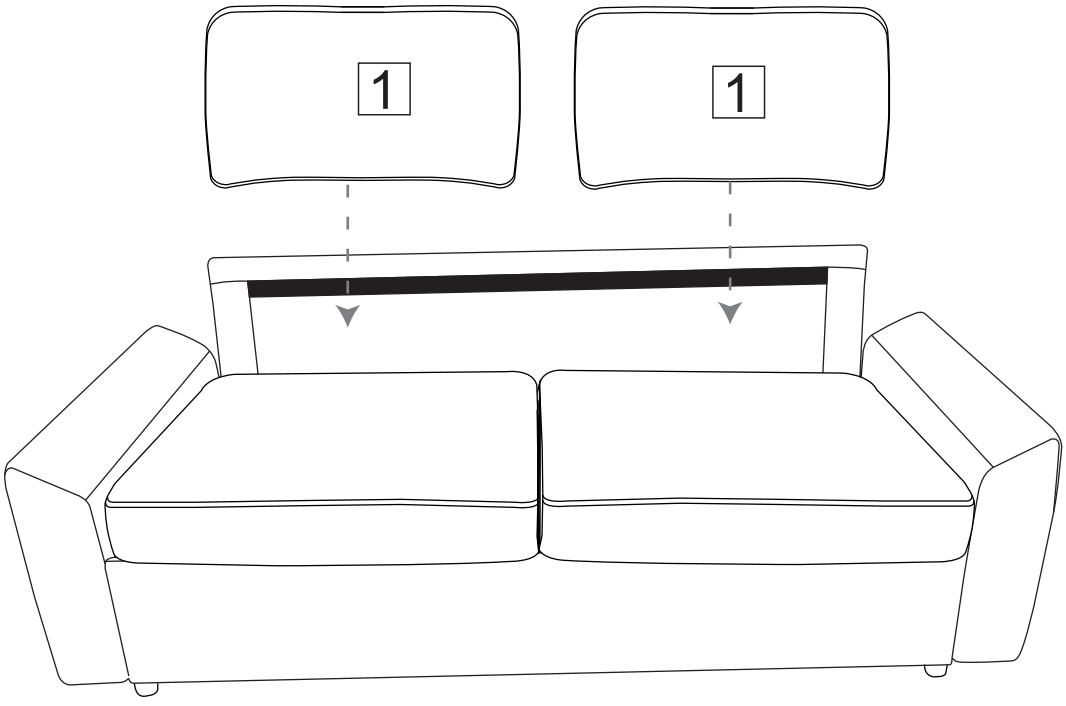

Peel off the Nylon Fastener on the backrest and insert part 1 into the corresponding position.

Step 12

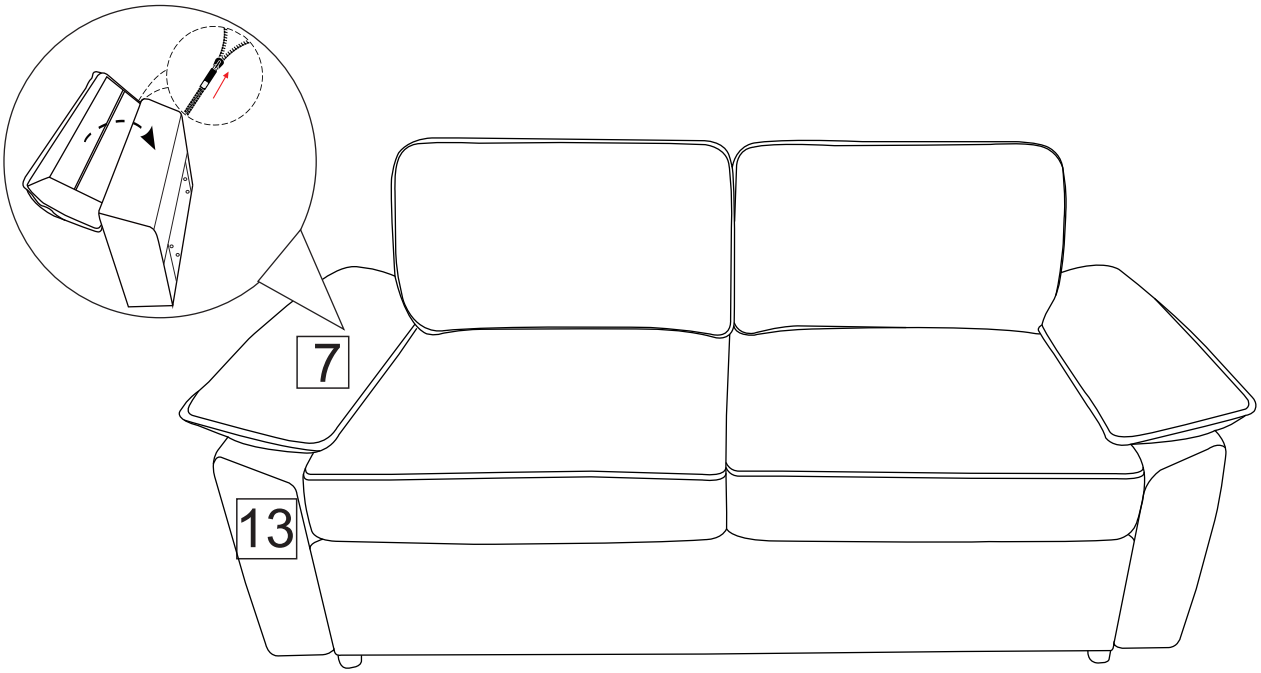

Connect armrest cover 7 to part 13.

Step 13

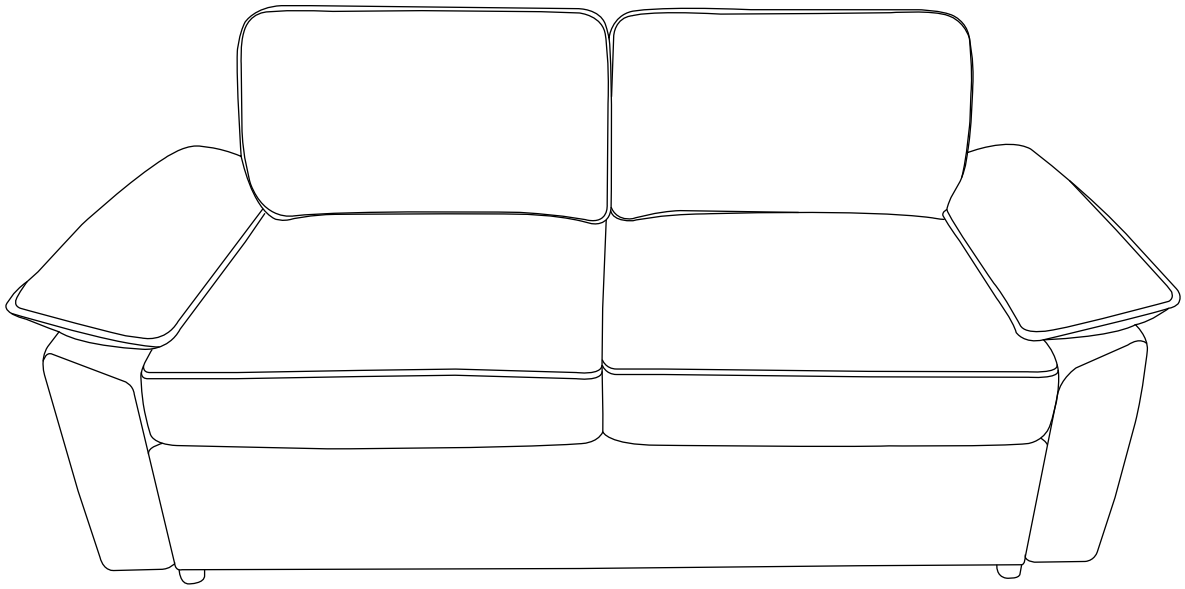

Email : **service@grandtunnel.com**

Maintenance

EN

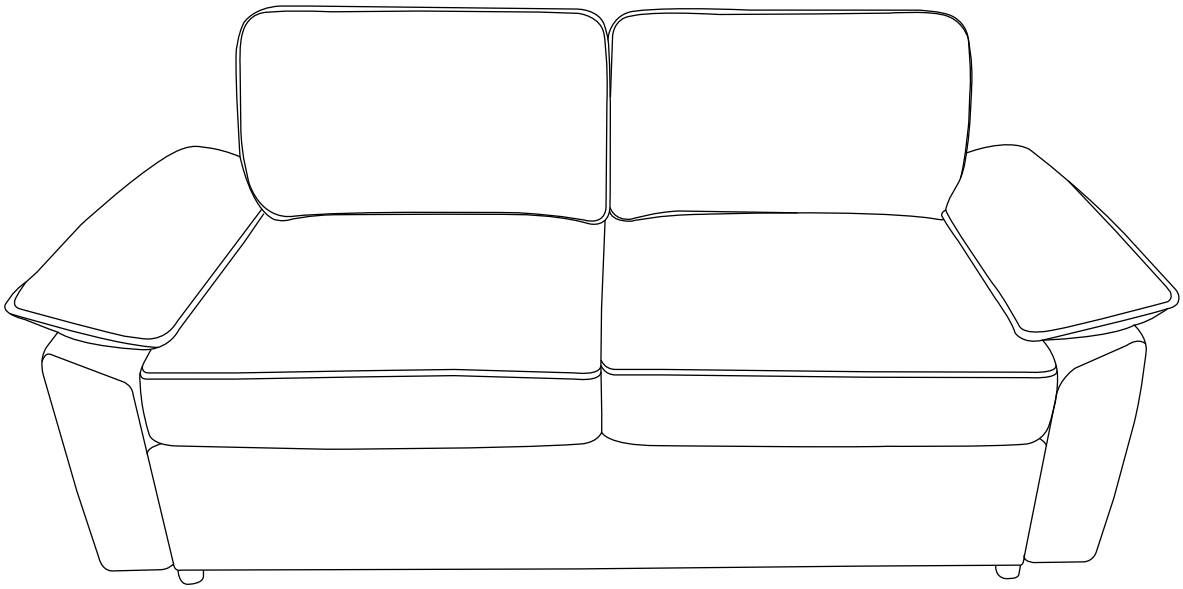

1. Avoid direct sunlight, preferably placed in a place that can avoid sunlight, or use translucent tulle curtains to block the sun.
2. Vacuum at least once a week, paying particular attention to removing dust accumulation between fabric structures.
3. Sofa cushions are turned over once a week to evenly distribute wear.
4. If stained, use a clean cloth dipped in water to wipe. In order to avoid leaving marks, it is best to wipe from the periphery of the stain. Velvet furniture should not be dipped in water and should use a dry cleaning agent.
5. All cloth covers and bushings should be dry-cleaned, not washed, not bleached.
6. If you find loose thread, do not tear it with your hand; it is best to cut the thread neatly with scissors.

Sofa

SKU:
C003072010
C003072020
C003072030
C003072040

V1.0