SAFAVIEH
COUTURE

ITEM ID : SFV9729
PRODUCT DIMENSION : 36"WX36"DX16"H

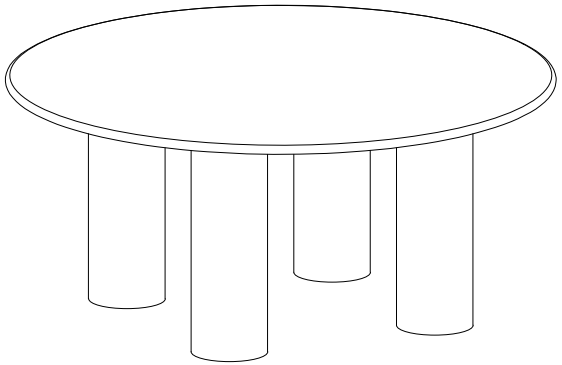

NOTICE

* Please make sure that you have all parts indicated and they are in good condition before you begin assembly of this item. Refer to part list and hardware list below for guidance.
* This item should be assembled on a soft surface to prevent scratching the finish during assembly.
* This item may require periodic tightening.
* If you are having difficulty, our friendly Customer Care team is always here to help. Please email **customersupport@safavieh.com**

PREPARATION

* Before beginning assembly of product, make sure all parts are present. Compare parts with part contents list and hardware contents list.
* If any part is missing or damaged, do not attempt to assemble the product.
* Estimated Assembly Time: 30 minutes.
* Require 2-3 person for assembly.
* Tools Required for Assembly (included): Allen Key

CARE AND MAINTENANCE

- Blot up spills immediately, always use coasters on table tops under beverages. Use trivets or mats under hot dishes or cookware. Clean with warm water and dry surface immediately after cleaning. Do not use cleaners that contain acid such as bathroom cleaners, grout cleaner, and tile cleaners. Do not use abrasive cleaners in either dry or liquid forms. Use a cleaner and polish formulated for marble surfaces.

PARTS & HARDWARE LIST

Piece	Description	Picture	Quantity	carton call
A	Marble Top		1x	1 of 2
B	Leg		4x	2 of 2
C	Assembly plate		4x	2 of 2
HW1	Allen Key (5mm)	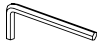	1x	2 of 2
HW2	CSK Bolt (8x1.25x25mm)		8x	2 of 2
HW3	JCB (8x1.25x16mm)		12x	2 of 2
HW4	Washer (25mm)		12x	2 of 2

⚠WARNING⚠

Weight Capacity : 112.5 lbs
WARNING : DO NOT STAND/SIT ON COFFEE TABLE
WARNING : DO NOT DRAG COFFEE TABLE
WARNING : HEAVY PRODUCT
WARNING : DO NOT OVER TORQUE BOLTS

PREPARATION

* Before beginning assembly of product, make sure all parts are present. Compare parts with part contents list and hardware contents list.
* If any part is missing or damaged, do not attempt to assemble the product.
* Estimated Assembly Time: 30 minutes.
* Tools Required for Assembly (included): Allen Key
* If you are having difficulty, our friendly Customer Care team is always here to help. Please email **customersupport@safavieh.com**

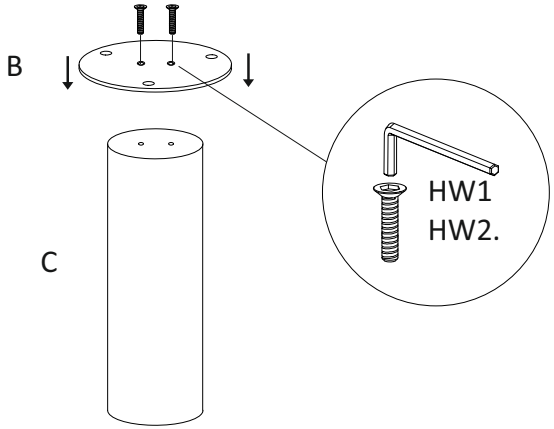

STEP 1: Align the holes on the assembly plate (C) to the holes on the legs (B). Attach the assembly plate (C) by using the allen key (HW1) to screw in the csk bolts (HW2). Repeat for the remaining legs.

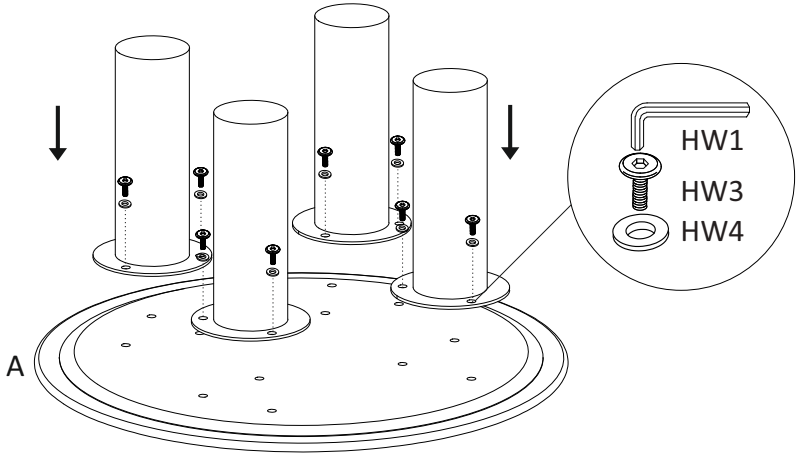

STEP 2: Place the marble top (A) upside down on a soft surface. Align the holes on the assembled legs to the holes on the marble top (A). Attach the assembled legs by using the allen key (HW1) to screw the JCB screws (HW3) through the washers (HW4) as shown.

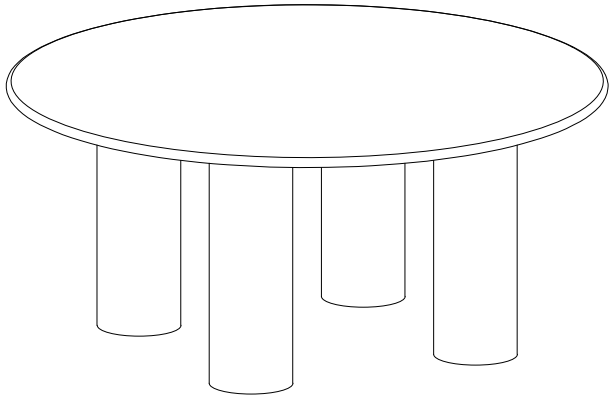

STEP 3: Turn the table upright. Your product is now ready for use.