ASSEMBLY INSTRUCTIONS

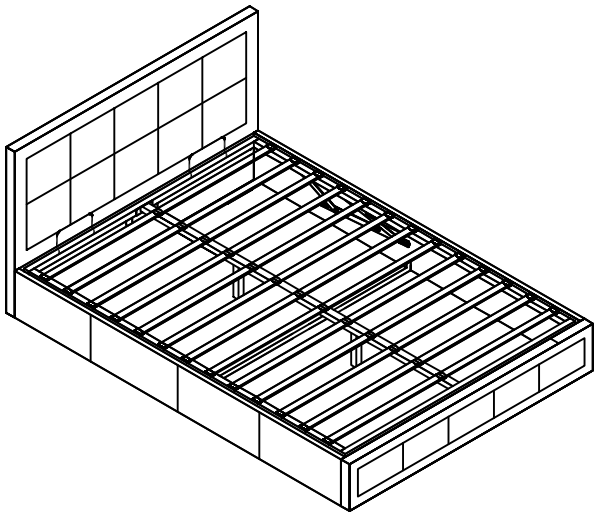



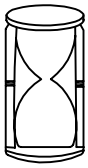

Approx
1.5 Hour
Set Up

Dimensions of Bed when fully Assembled:
Lenght x Width x Height (Headboard / Footboard)
4ft. Small Double: +/- 2040 x 1280 x 895 / 295mm

In the unlikely event, parts are missing or damaged in transist.
Please contact the Seller on website your purchase was made.
Our customer service team will assist to arrange replacement parts to complete assembly.

PLEASE READ THE INSTRUCTIONS CAREFULLY PRIR TO ASSEMBLY.

1) Owing to the size and weight of the bed, we recommend that it is assembled by two adults, on a flat surface in a room that it is intended for.
2) Please Do Not use any tools other than those provided or recommended in these instructions.
3) Please Do Not discard any packing until you have checked that you have all the parts and fittings. keep all fittings out of reach of children.
4) Assemble all parts loosely until advised to tighten. Depending on use, it mayble necessary to tighten the fittings from time to tme, So please save your Allen key and Spanner that has beed provided.

WARNINGS

1) Please ensure children Do Not play in the storage area or try to lift up the metal frame.
2) Once assembled, put mattress on frame before pushing it down and only lift up or push down the metal frame with mattress on top.
3) Please Do Not stand on the storage base at any time.
4) Do Not throw away any of the packaging or the instructions booklet until you have checked all the components and fittings and the furniture is fully assembled.

HOW TO USE BED

When the bed is fully assembled, Lift the frame up using the nylon strap. To close the frame you will need to place both hands on the metal bar that is in the air and Apply pressure to close the bed. The bde will only work if this done centrally. Please also note the lift arms do not move up and down on their own and only work if the bed is fully assembled and is assembled correctly and will only work normally with mattress on the frame. Depending on the weight of the mattress, the speed of the lift will vary so be careful until you get used to the speed. Always use the fabric handle to lift or lower the frame.
CAUIOUS:-keep fingers well away from the moving parts.

PART LIST

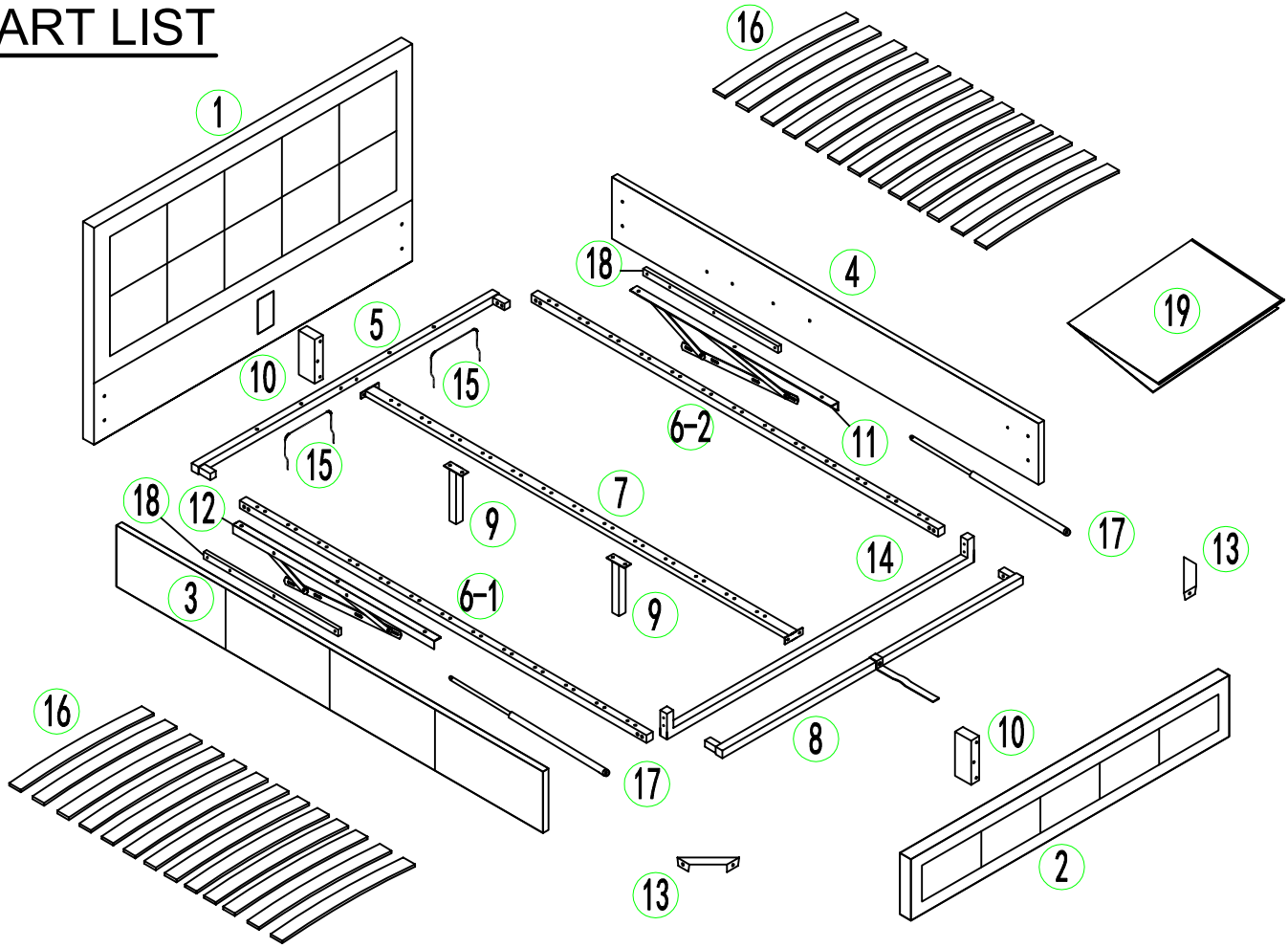

HARDWARE LIST

Label	Picture	Description	Qty	Label	Picture	Description	Qty
A		Single Plastic Cap	26	I		Bolt M6x20	4
B		Double Plastic Cap	13	L		Connection Plate Left	2
D		Bolt M8x20	16	R		Connection Plate Right	2
E		Screw 4x35	4	M		Bolt M8x30	8
F		Washer M8	8	N		Bolt M8x15	22
G		Nut	4	K		Screw 4x80	6

TOOL list

Label	Picture	Description	Qty
T-1		Screw driver (not provided)	1
T-2		Allen key M5	1
T-3		Allen key M4	1
T-4		Spanner	1

Step 1

L 2pcs Connection Plate Left	R 2pcs Connection Plate Right
D 16pcs Bolt M8x20	I 4pcs Bolt M6x20
	F 8pcs Washer M8

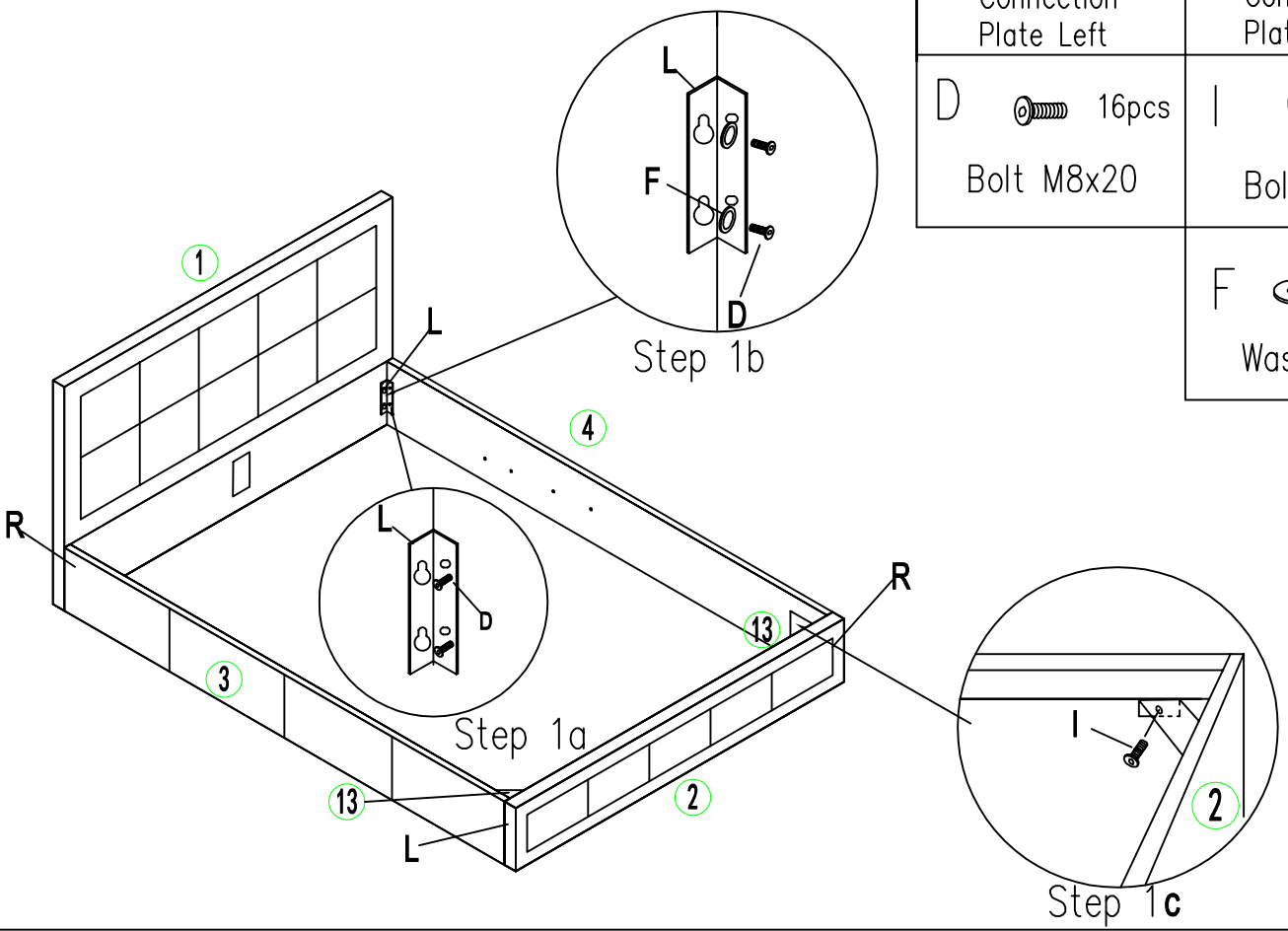

Step 2

K 6pcs Screw 4*80	E 4pcs Screw 4*35
	M 8pcs Bolt M8x30

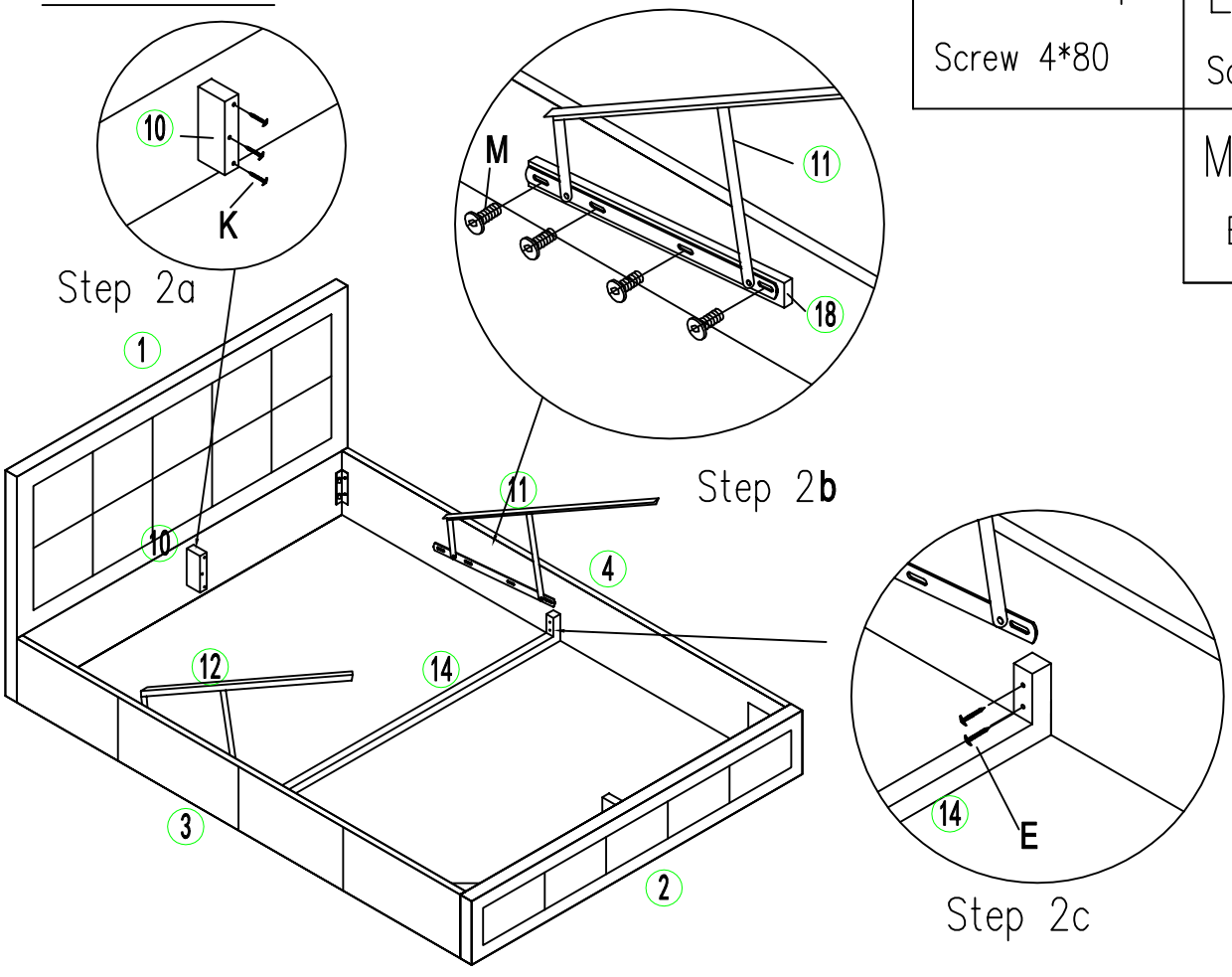

Step 3

N	16pcs
Bolt M8x15	

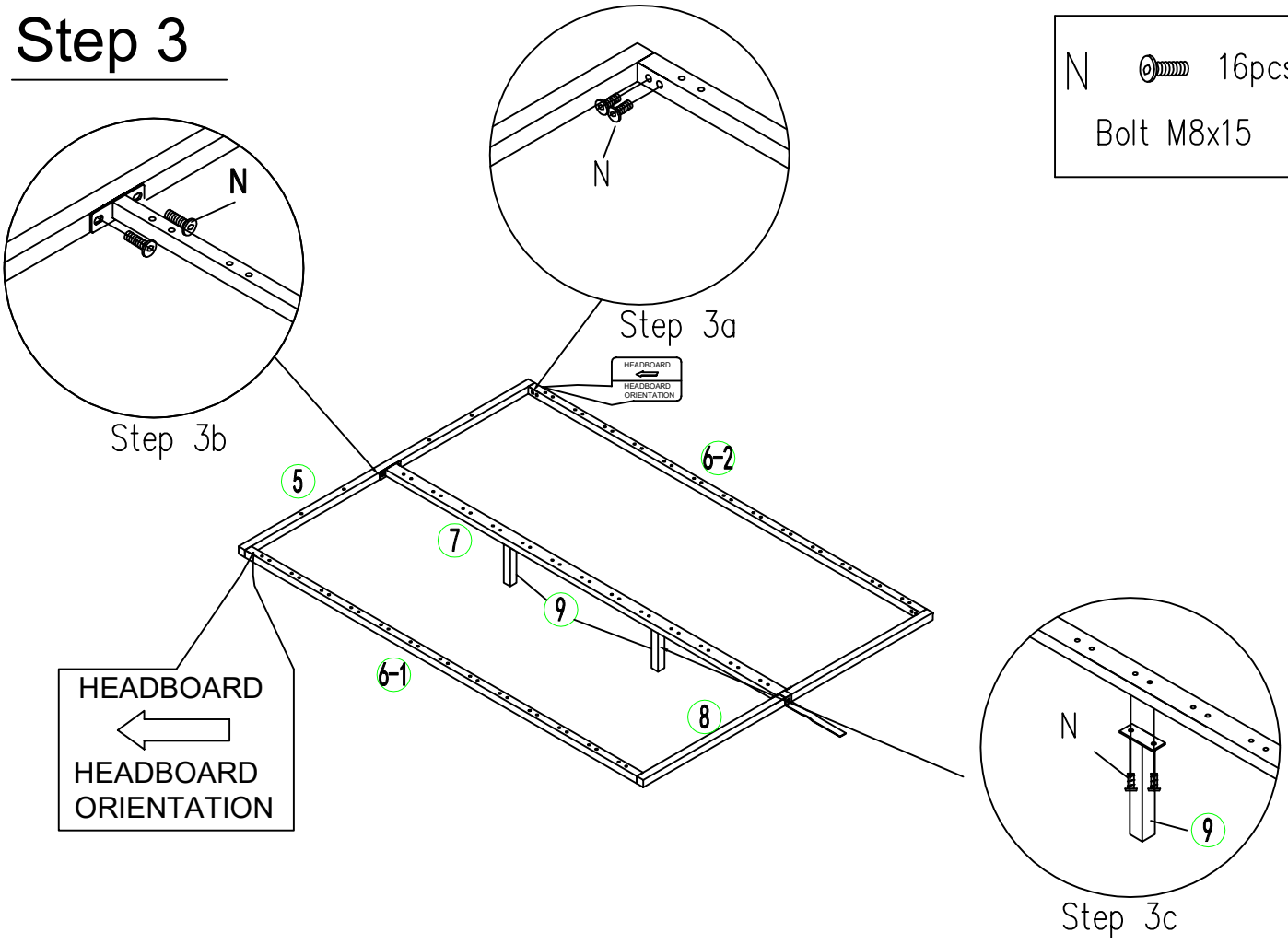

Step 4

N	6pcs	G	4pcs
Bolt M8x15		Nut	

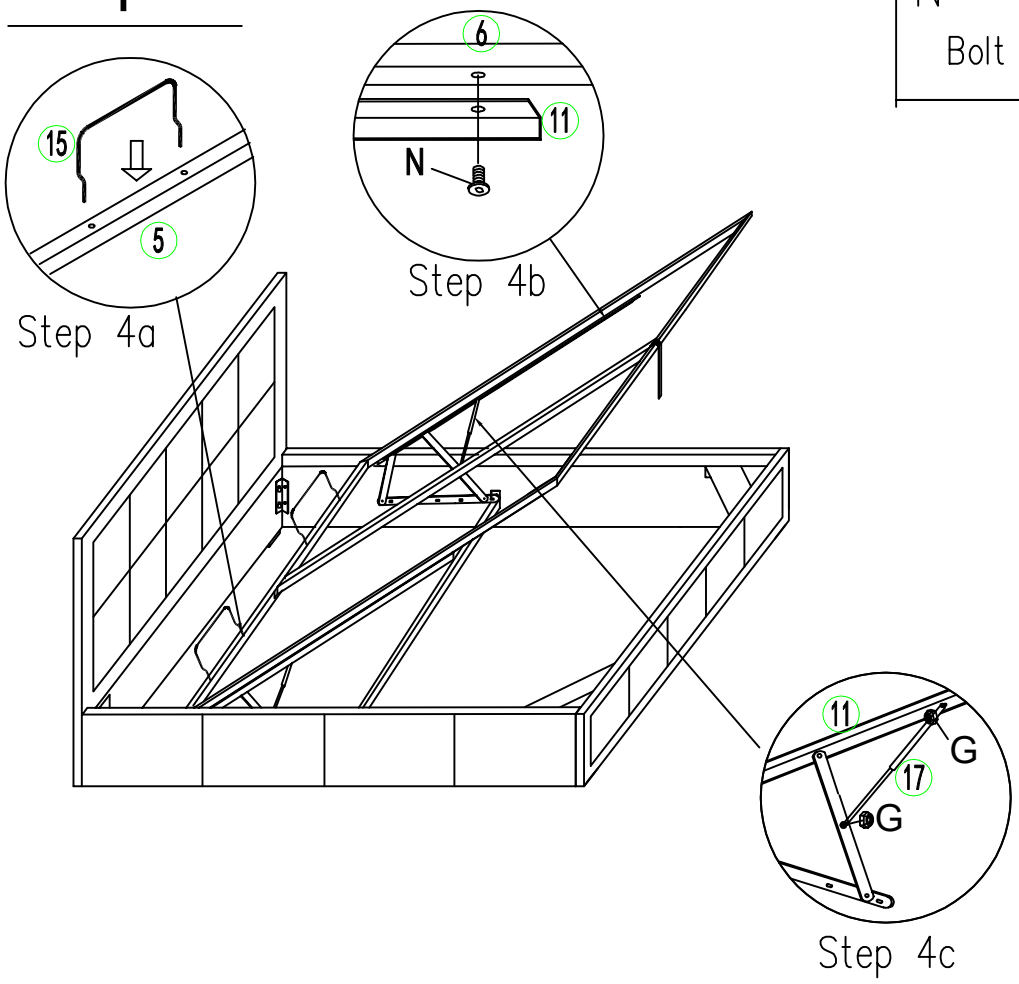

Step 5

A 26pcs	B 13pcs
Single Plastic Cap	Double Plastic Cap

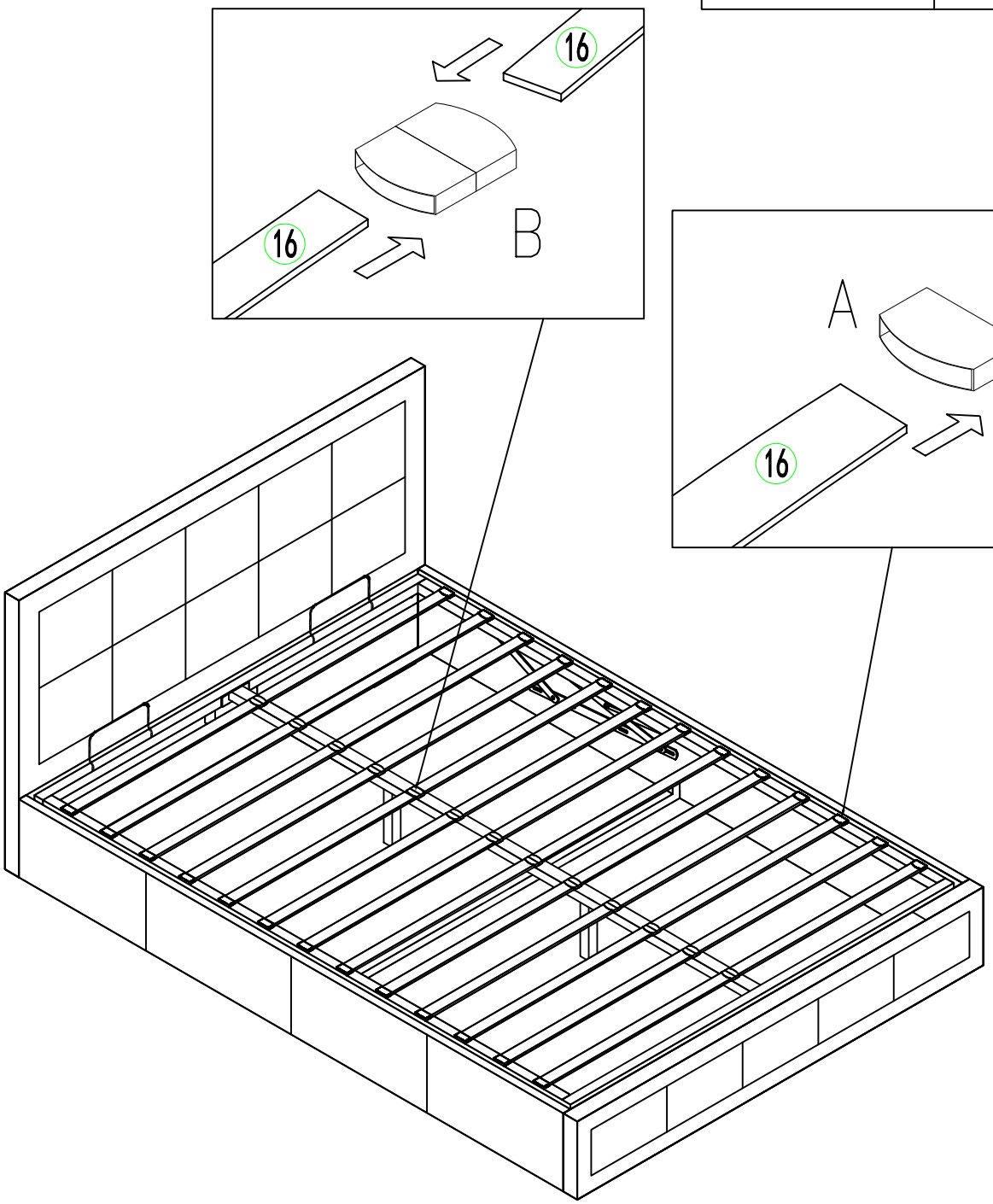

Atention: Please remove mattress from the bed shoudle you wish to clean the floor under the bed. Dragging the bed around with mattress might compromise the bed construction , stability or cause permanent damage.

Step 6

Turn bed on its side and paste non woven fabric to the botton of the bed

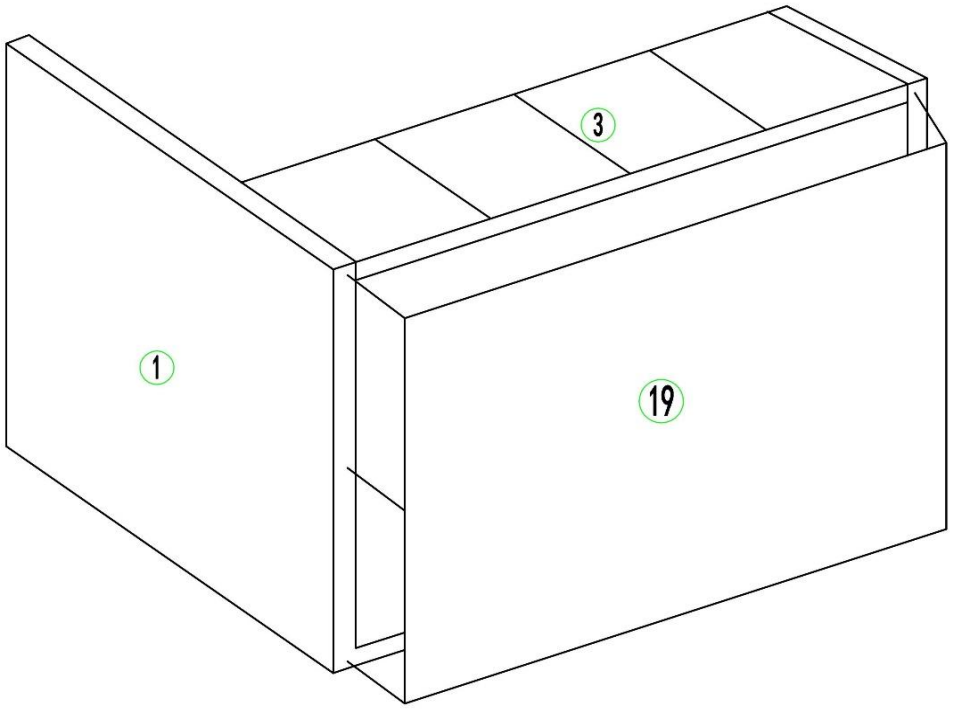

IMPORTANT INFORMATION

OTTOMAN OPERATING INSTRUCTIONS

Once your bed frame is completely assembled, the slat frame unit will not operate correctly unless a mattress is placed on the slat frame. Position the mattress onto the slat frame whilst it is in the closed position.

The pistons used in the construction of this product are extremely strong and cannot be operated by hand when not fitted to the ottoman hinges. All pistons are tested in the factory for correct pressure and operation before use.

Initially it might appear that the pistons are very stiff when opening and closing the ottoman frame, THIS IS NORMAL.

After operating the ottoman a few times, the movement of the pistons and the opening and closing of the ottoman will become easier.

PLEASE NOTE - It takes a lot of force to make the initial movement of the ottoman. **THIS IS A DESIGN FEATURE OF THE PRODUCT SO THAT IT DOES NOT FALL SHUT.** When the ottoman is almost shut, it will close completely under its own weight. The speed of closing depend on the weight of the mattress so always keep fingers clear of the frame. Periodically check and tighten bolts to ensure that the components are tight and secure.

When lowering the slat unit for the first time, take care to make sure it does not rub unevenly on the inside face of the Side Rail. If it does, the bed has been assembled slightly out of square. This can be rectified by moving the Footboard of the bed slightly to the left or right whilst leaving the headboard of the bed frame stationary.

If you are experiencing difficulty with the initial compression try fitting one piston at a time (following the Assembly Instructions) then press down on the side of the frame with the piston fitted - this acts like a big lever (The weight of the mattress can be used to supplement the load exerted). Effectively you are doubling the amount of force applied, because you have halved the resistance offered by the pistons. It can take slightly more effort than you might feel comfortable applying to the bed frame at first.

WARNING

For the safety of yourselves and others, please ensure that:

- **Children and pets are not left unattended when the frame is in the lifted position as they could become trapped inside the ottoman space.**
- **Please keep children and pets away from the ottoman bedstead whilst opening and closing the slat frame to avoid injury.**
- **The items store under the bed - i.e. the top of an item must not touch the underside of the mattress metal frame base or it may get damaged.**

ATTENTION
Important Notes
Regarding Gas Lifts

This information applies to all types of gas lift storage, regardless of the base top: boarded base ❶ or wooden slats ❷ and regardless of opening configuration: end opening ❶ / side opening ❷

NEVER OPEN OR CLOSE WITHOUT A MATTRESS ON TOP OR YOU RISK TWISTING THE FRAME, DAMAGING THE BED OR PERSONAL INJURY!

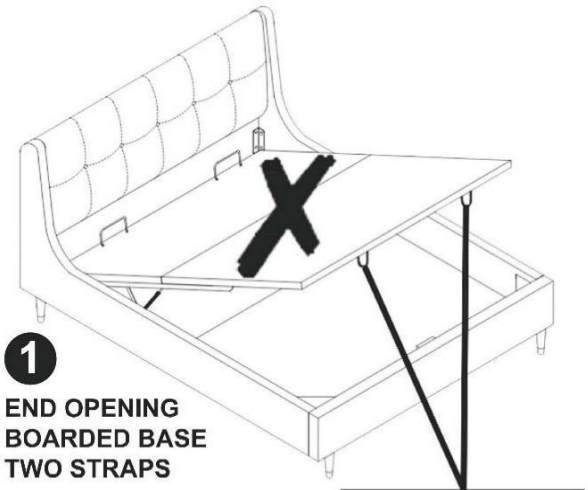

❶ END OPENING BOARDED BASE TWO STRAPS

TO OPEN, USE SAFETY STRAP(S) TO LIFT THE MATTRESS

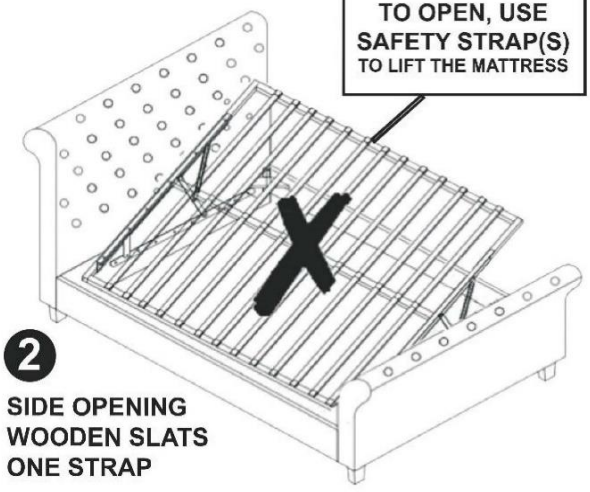

❷ SIDE OPENING WOODEN SLATS ONE STRAP

❸ ONCE THE MATTRESS IS ON TOP, YOU CAN OPEN & CLOSE THE BED SAFELY ✓

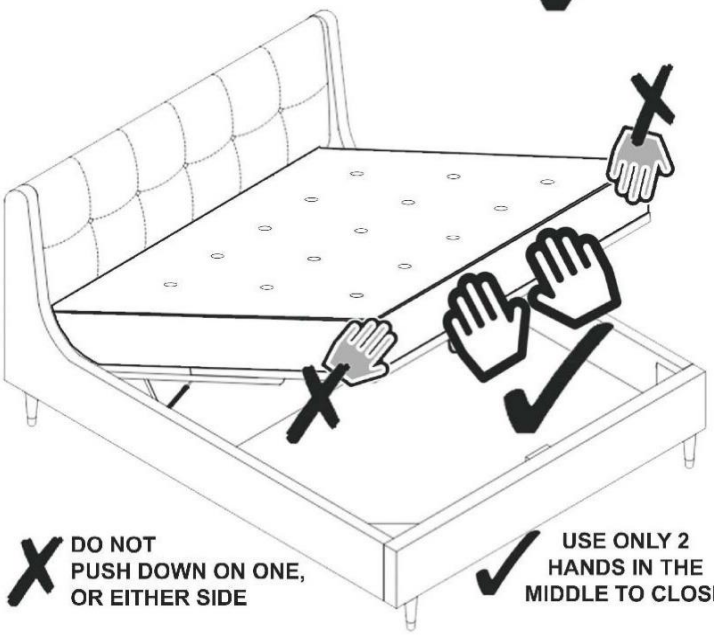

✗ DO NOT PUSH DOWN ON ONE, OR EITHER SIDE

✓ USE ONLY 2 HANDS IN THE MIDDLE TO CLOSE

Once all the nuts and bolts are tightened firmly, the first time you close the lifting mechanism, push down with extra pressure to force open the seals on the pistons.

This will feel like a lot of pressure, so be firm and it will close!

1. **NEVER operate without a mattress on top. Failure to do so will damage the bed.**
2. **Close by pushing down firmly, with both hands towards the centre, with equal pressure.**
3. **NEVER push down on only one side or edge, or you will damage your bed.**
4. **NEVER sleep on the bed frame without a mattress.**
5. **Please remember to re-tighten all nuts & bolts within the bed frame after 2 weeks of use.**

Hints and Tips

Failure to do so may result in injury.

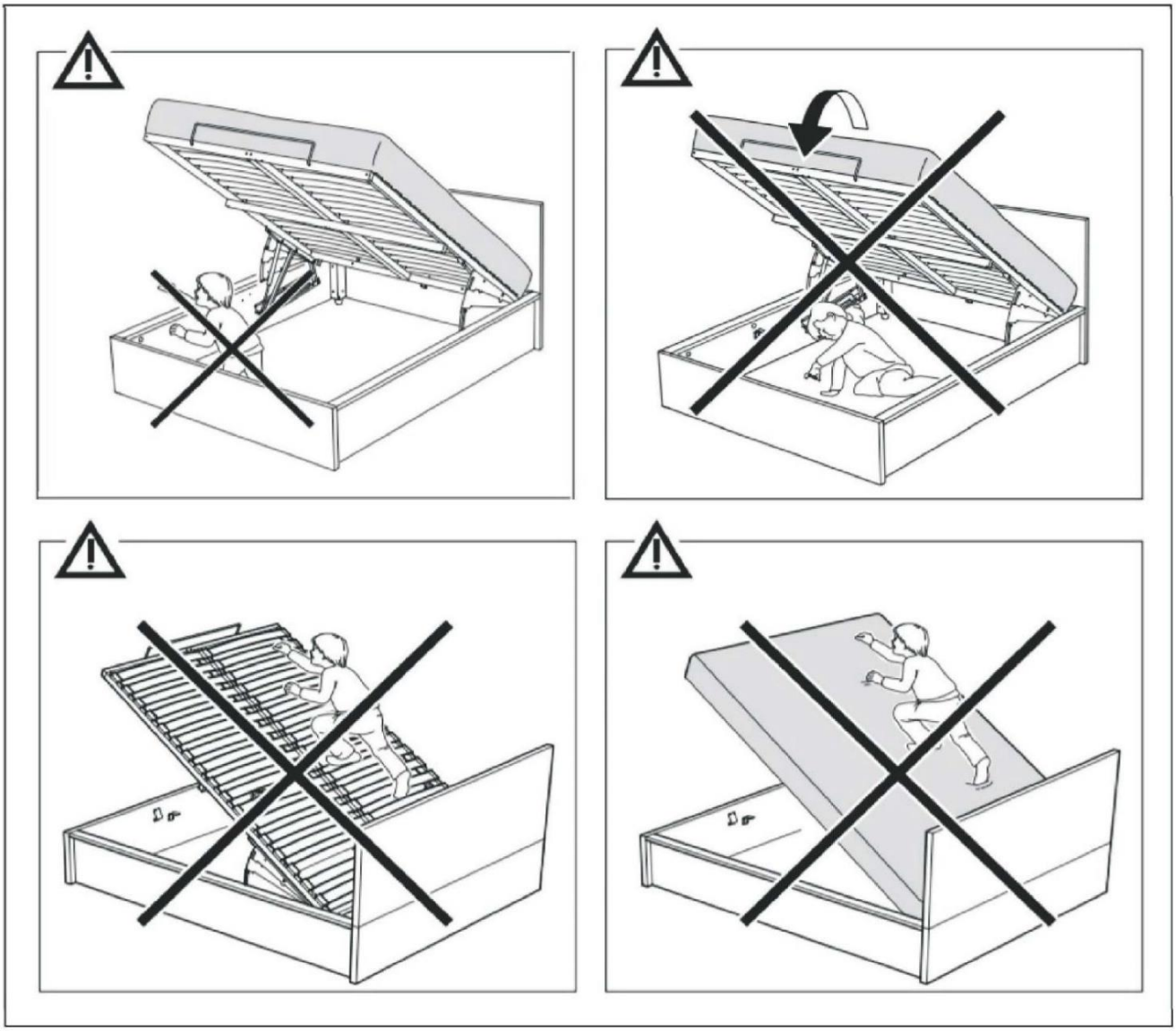

Bed frame must be in CLOSED position when moving the bed.

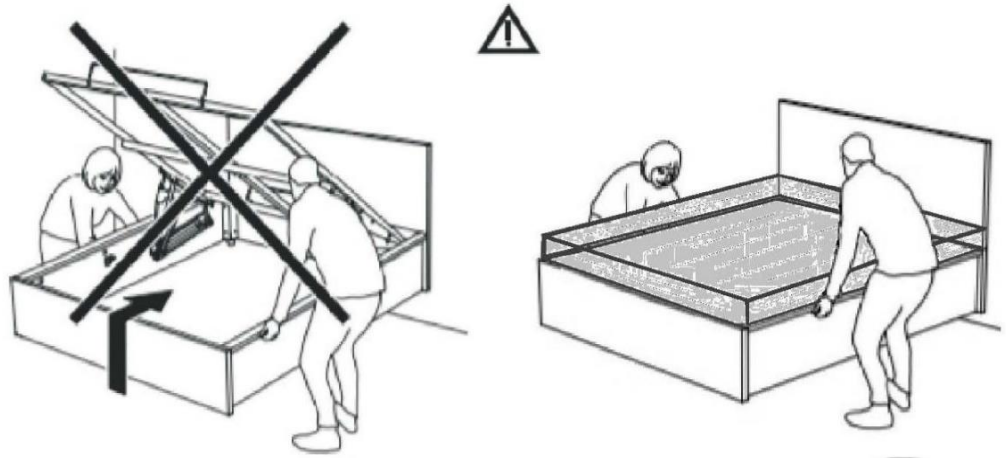

Hints and Tips

Failure to do so may result in injury.

To operate the ottoman, always use two hands at arm's length to push down on the bed frame end, in between the 2 rows of slats (as shown below) to close the bed frame.

To open, lift up using the nylon strap on the bed end.
You must always ensure the mattress is on the bed frame before lifting to open and close the bed frame.

The weight of the mattress loaded on the frame helps to close the bed frame easier and with less effort, also keep the frame in closed position until it is pulled upwards by user.



