Vanity Collection

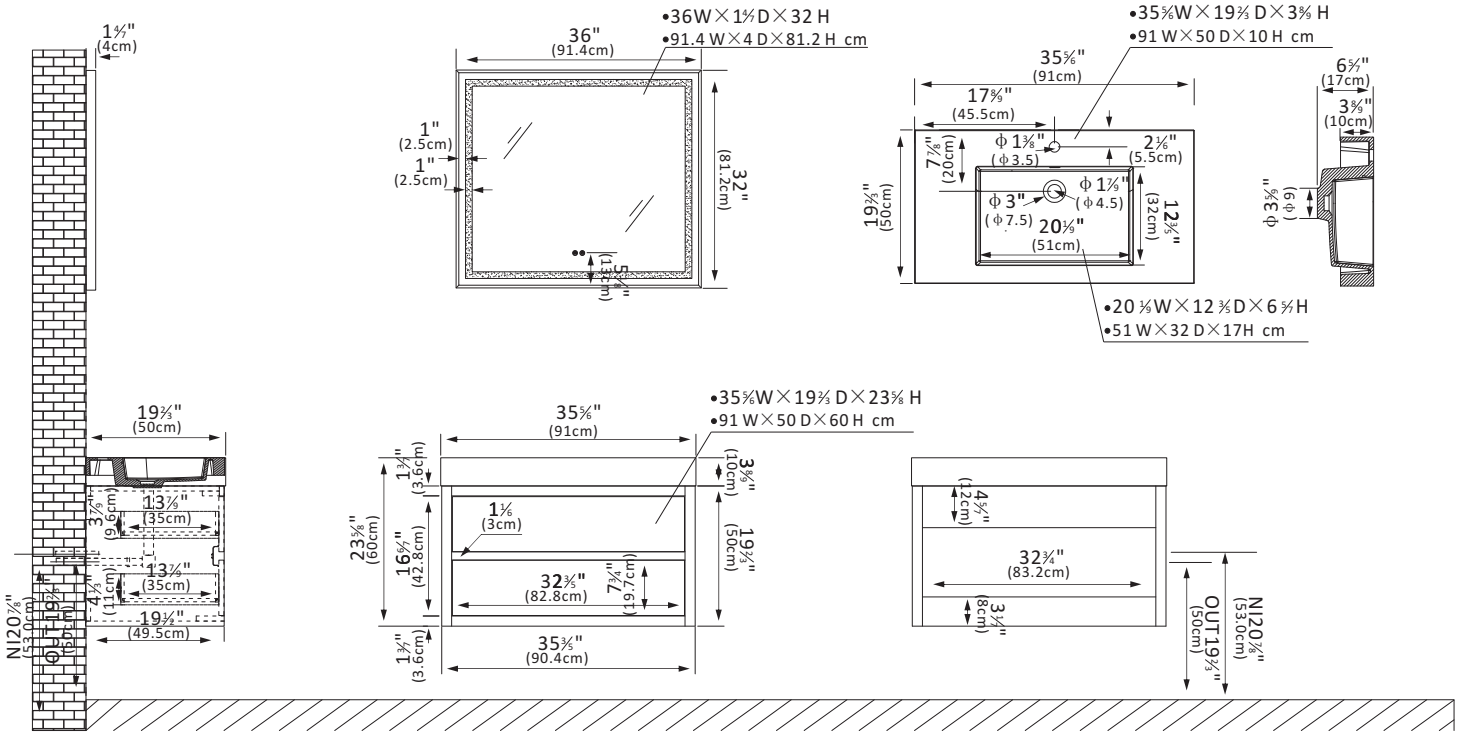

Features

●Durable Materials: Crafted of Wood-Finished PVC board which Waterproof, moisture-proof and ash layer for superior stability and durability.
●Stunning Finish: Available in North American Oak finish to complement your décor.
●Ample Storage Space: Two soft-close drawers provide ample storage for toiletries. Luxury soft-close drawer glide ensures smooth opening and closing which was including the back panel.
●Modern Top: 6.7"-thick, white integrated rectangular sink top with overflow lends a fresh and contemporary look. With a high-gloss, anti-fouling coating, the countertop is scratch-resistant, wear-resistant, and easy to clean.
●High-Quality Hardware: Brushed Gold hardware finish lends a touch of style and contrast.
●Matching Mirrors: Single, rectangular LED mirror coordinates perfectly with vanity. (Mirror Option)
●Faucet Type: Countertop has a pre-drilled, standard 1-3/8" faucet hole.
●Accessories: Does not include faucet, drain assembly or P-trap,backsplash and Storage Cabinet. Comes fully assembled and ready to install in your bathroom.
●No Installation Required: Floating bathroom vanity comes fully assembled for your convenience. Designed for easy, no-hassle plumbing and faucet installation.
●Full Warranty: 1-Year Manufacturer Warranty—purchase with 100% peace of mind.
●Country of Origin: China