MOISWELL

Defender M145

USER MANUAL

Welcome

Thank you for selecting MOISWELL as your trusted dehumidifier provider!
At MOISWELL, we take pride in offering premium commercial and industrial dehumidifiers, available in both vertical and horizontal orientations. Our dehumidifiers are designed to swiftly reduce humidity levels, making them ideal for a wide range of applications, including excess water removal, rapid construction drying, and water damage restoration. Equipped with an onboard humidistat, these commercial dehumidifiers effortlessly maintain your desired room humidity level.

They are perfect for warehouses, storage areas, manufacturing plants, office buildings, restaurants, bars, sports facilities, locker rooms, indoor pools and spas, marine environments, and any space susceptible to excessive humidity.

We sincerely hope that your MOISWELL dehumidifier enhances your environment. Before plugging in your new dehumidifier, we strongly recommend reviewing the comprehensive user manual provided. It contains essential safety guidelines, operational instructions, troubleshooting tips, maintenance recommendations, and warranty details, ensuring the longevity and reliability of your investment. For a more efficient support experience, please take a moment to register your product on our website at **www.moiswell.com.** Our commitment is to ensure your utmost satisfaction with your purchase. If, for any reason, your buying experience falls short of excellence, please do not hesitate to let us know. Your feedback is invaluable to us.

We are here to assist you every step of the way. Reach out to our dedicated customer support team via email at **service@moiswell.com**, providing your purchase order ID for faster and more personalized assistance. Once again, thank you for choosing MOISWELL. We look forward to exceeding your expectations.

BEFORE FIRST USE:

Before first use, allow the dehumidifier to stand upright for 24 hours.
During transit, the dehumidifier may have been tilted or laid on its side, which can cause internal fluids like compressor oil to move around. Letting it stand upright gives everything time to settle,ensuring the dehumidifier works properly from the start.
This is a normal precaution and nothing to be concerned about.

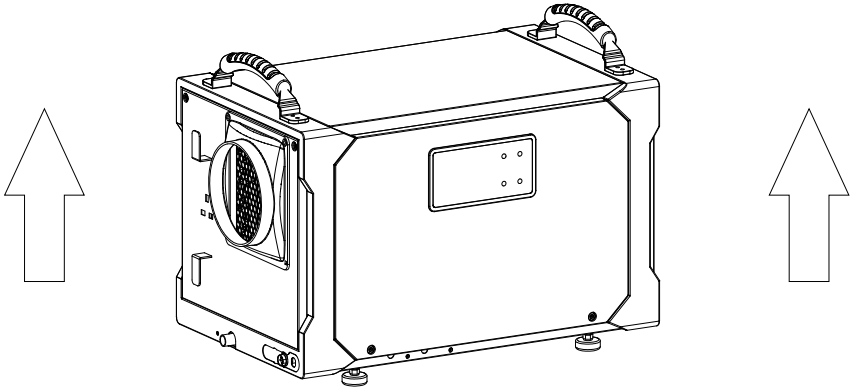

CONTENTS

Warning For Using R32 Refrigerant **1**

Parts Identification **11**

Operation Instructions **12**

1. Position Your Dehumidifier 12

2. Connect the Drain Hose 13

3. Plug in Electrical Cord 13

4. Understand the Control Panel 14

5. General Operation Instructions 15

6. Timer Setting 16

7. Smart Functions 16

Maintenance **17**

1. Cleaning the Dehumidifier 17

2. Cleaning the Air Filter 17

Trouble Shooting Guide **18**

Trouble shooting chart 18

Warranty **20**

WARNING for Using R32 Refrigerant:

Transportation, marking and storage for units that employ flammable refrigerants

1. General

The following information is provided for units that employ FLAMMABLE REFRIGERANTS.

2. Transport of equipment containing flammable refrigerants

Attention is drawn to the fact that additional transportation regulations may exist with respect to equipment containing flammable gas. The maximum number of pieces of equipment or the configuration of the equipment permitted to be transported together will be determined by the applicable transport regulations.

3. Marking of equipment using signs

Signs for similar appliances used in a work area are generally addressed by local regulations and give the minimum requirements for the provision of safety and/or health signs for a work location.

All required signs are to be maintained and employers should ensure that employees receive suitable and sufficient instruction and training on the meaning of appropriate safety signs and the actions that need to be taken in connection with these signs.

The effectiveness of signs should not be diminished by too many signs being placed together. Any pictograms used should be as simple as possible and contain only essential details.

4. Disposal of equipment using flammable refrigerants

See national regulations.

5. Storage of equipment/appliances

The storage of the appliance should be in accordance with the applicable regulations or instructions,whichever is more stringent.

6. Storage of packed (unsold) equipment

Storage package protection should be constructed in such a way that mechanical damage to the equipment inside the package will not cause a leak of the REFRIGERANT CHARGE.

The maximum number of pieces of equipment permitted to be stored together will be determined by local regulations.

Requirements for operation,service and installation manuals of appliances using flammable refrigerants

WARNING

Do not use means to accelerate the defrosting process or to clean, other than those recommended by the manufacturer.

The appliance shall be stored in a room without continuously operating ignition sources (for example:open flames, an operating gas appliance or an operating electric heater.Do not pierce or burn.

Be aware that refrigerants may not contain an odour.



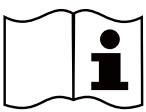



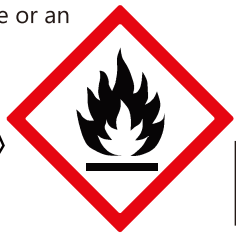

Refrigerant Safety Group A2L

Qualification of workers

The manual shall contain specific information about the required qualification of the working personnel for maintenance, service and repair operations. Every working procedure that affects safety means shall only be carried out by competent persons.

Examples for such working procedures are:

• breaking into the refrigerating circuit;

• opening of sealed components;

Competence of service personnel

1. General

Information of procedures additional to usual information for refrigerating appliance installation, repair, maintenance and decommission procedures is required when an appliance with FLAMMABLE REFRIGERANT is affected.

The training of these procedures is carried out by national training organisations or manufacturers that are accredited to teach the relevant national competency standards that may be set in legislation.

The achieved competence should be documented by a certificate.

2. Information and training

2.1) The training should include the substance of the following.

2.2) Information about the explosion potential of FLAMMABLE REFRIGERANTS to show that flammables may be dangerous when handled without care.

2.3) Information about POTENTIAL IGNITION SOURCES, especially those that are not obvious, such as lighters, light switches, vacuum cleaners, electric heaters.

2.4) Information about the different safety concepts:

- Unventilated-Safety of the appliance does not depend on ventilation of the housing.
- Switching off the appliance or opening of the housing has no significant effect on the safety.
- Nevertheless, it is possible that leaking refrigerant may accumulate inside the enclosure and flammable atmosphere will be released when the enclosure is opened.
- Ventilated enclosure-Safety of the appliance depends on ventilation of the housing.
- Switching off the appliance or opening of the enclosure has a significant effect on the safety.
- Care should be taken to ensure sufficient ventilation before.
- Ventilated room -Safety of the appliance depends on the ventilation of the room.
- Switching off the appliance or opening of the housing has no significant effect on the safety.
- The ventilation of the room shall not be switched off during repair procedures.

2.5) Information about refrigerant detectors:

- Principle of function, including influences on the operation.
- Procedures, how to repair, check or replace a refrigerant detector or parts of it in a safe way.
- Procedures, how to disable a refrigerant detector in case of repair work on the refrigerant carrying parts.

2.6) Information about the concept of sealed components and sealed enclosures according to IEC60079-15:2010.

2.7) Information about the correct working procedures:

a) Commissioning

- Ensure that the floor area is sufficient for the REFRIGERANT CHARGE or that the ventilation duct is assembled in a correct manner.
- Connect the pipes and carry out a leak test before charging with refrigerant.
- Check safety equipment before putting into service.

b) Maintenance

- Portable equipment shall be repaired outside or in a workshop specially equipped for servicing units with FLAMMABLE REFRIGERANTS.
- Ensure sufficient ventilation at the repair place.
- Be aware that malfunction of the equipment may be caused by refrigerant loss and a refrigerant leak is possible.
- Discharge capacitors in a way that won't cause any spark. The standard procedure to short circuit the capacitor terminals usually creates sparks.
- Reassemble sealed enclosures accurately. If seals are worn, replace them.
- Check safety equipment before putting into service.

c) Repair

- Portable equipment shall be repaired outside or in a workshop specially equipped for servicing units with FLAMMABLE REFRIGERANTS.
- Ensure sufficient ventilation at the repair place.
- Be aware that malfunction of the equipment may be caused by refrigerant loss and a refrigerant leak is possible.
- Discharge capacitors in a way that won't cause any spark.
- When brazing is required, the following procedures shall be carried out in the following order:

--Safely remove the refrigerant following local and national regulations. If the recovery is not required by national regulations, drain the refrigerant to the outside. Take care that the drained refrigerant will not cause any danger. In doubt, one person should guard the outlet. Take special care that drained refrigerant will not float back into the building;

d) Decommissioning

- If the safety is affected when the equipment is putted out of service, the REFRIGERANT CHARGE shall be removed before decommissioning.
- Ensure sufficient ventilation at the equipment location.
- Be aware that malfunction of the equipment may be caused by refrigerant loss and a refrigerant leak is possible.
- Discharge capacitors in a way that won't cause any spark.
- Remove the refrigerant. If the recovery is not required by national regulations, drain the refrigerant to the outside. Take care that the drained refrigerant will not cause any danger. In doubt, one person should guard the outlet. Take special care that drained refrigerant will not float back into the building.
- When FLAMMABLE REFRIGERANTS except A2L REFRIGERANTS are used:

--Evacuate the refrigerant circuit.

--Purge the refrigerant circuit with nitrogen for 5 min.

--Evacuate again.

--Fill with nitrogen up to atmospheric pressure.
--Put a label on the equipment that the refrigerant is removed.

e) Disposal

- Ensure sufficient ventilation at the working place.
- Remove the refrigerant. If the recovery is not required by national regulations, drain the refrigerant to the outside. Take care that the drained refrigerant will not cause any danger. In doubt, one person should guard the outlet. Take special care that drained refrigerant will not float back into the building.
- When flammable refrigerants are used,

--evacuate the refrigerant circuit.
--purge the refrigerant circuit with oxygen free nitrogen.
--evacuate again. (not required for A2L refrigerants); and
--cut out the compressor and drain the oil.

Information on servicing

1. General

The manual shall contain specific information for service personnel according.

2. Checks to the area

Prior to beginning work on systems containing FLAMMABLE REFRIGERANTS, safety checks are necessary to ensure that the risk of ignition is minimised. For repair to the REFRIGERATING SYSTEM.

3. Work procedure

Work shall be undertaken under a controlled procedure so as to minimise the risk of a flammable gas or vapour being present while the work is being performed.

4. General work area

All maintenance staff and others working in the local area shall be instructed on the nature of work being carried out. Work in confined spaces shall be avoided.

5. Checking for presence of refrigerant

The area shall be checked with an appropriate refrigerant detector prior to and during work, to ensure the technician is aware of potentially toxic or flammable atmospheres. Ensure that the leak detection equipment being used is suitable for use with all applicable refrigerants, i. e. non-sparking, adequately sealed or intrinsically safe.

6. Presence of fire extinguisher

If any hot work is to be conducted on the refrigerating equipment or any associated parts, appropriate fire extinguishing equipment shall be available to hand. Have a dry powder or CO_2 fire extinguisher adjacent to the charging area.

7. No ignition sources

No person carrying out work in relation to a REFRIGERATING SYSTEM which involves exposing any pipe work shall use any sources of ignition in such a manner that it may lead to the risk of fire or explosion. All possible ignition sources, including cigarette smoking, should be kept sufficiently far away from the site of installation, repairing, removing and disposal, during which refrigerant can possibly be released to the surrounding space. Prior to work taking place, the area around the equipment is to be surveyed to make sure that there are no flammable hazards or ignition risks.

"No Smoking" signs shall be displayed.

8. Ventilated area

Ensure that the area is in the open or that it is adequately ventilated before breaking into the system or conducting any hot work. A degree of ventilation shall continue during the period that the work is carried out. The ventilation should safely disperse any released refrigerant and preferably expel it externally into the atmosphere.

9. Checks to the refrigerating equipment

Where electrical components are being changed, they shall be fit for the purpose and to the correct specification. At all times the manufacturer's maintenance and service guidelines shall be followed. If in doubt, consult the manufacturer's technical department for assistance.
The following checks shall be applied to installations using.

FLAMMABLE REFRIGERANTS:

--the actual REFRIGERANT CHARGE is in accordance with the room size within which the refrigerant containing parts are installed;
--the ventilation machinery and outlets are operating adequately and are not obstructed;
--if an indirect refrigerating circuit is being used, the secondary circuit shall be checked for the presence of refrigerant;
--marking to the equipment continues to be visible and legible. Markings and signs that are illegible shall be corrected;
--refrigerating pipe or components are installed in a position where they are unlikely to be exposed to any substance which may corrode refrigerant containing components, unless the components are constructed of materials which are inherently resistant to being corroded or are suitably protected against being so corroded.

10. Checks to electrical devices

Repair and maintenance to electrical components shall include initial safety checks and component inspection procedures. If a fault exists that could compromise safety, then no electrical supply shall be connected to the circuit until it is satisfactorily dealt with. If the fault cannot be corrected immediately but it is necessary to continue operation, an adequate temporary solution shall be used. This shall be reported to the owner of the equipment so all parties are advised.

Initial safety checks shall include:

• That capacitors are discharged: this shall be done in a safe manner to avoid possibility of sparking;
• That no live electrical components and wiring are exposed while charging, recovering or purging the system;
• That there is continuity of earth bonding.

11. Repairs to sealed components

1) During repairs to sealed components, all electrical supplies shall be disconnected from the equipment being worked upon prior to any removal of sealed covers, etc. If it is absolutely necessary to have an electrical supply to equipment during servicing, then a permanently operating form of leak detection shall be located at the most critical point to warn of a potentially hazardous situation.
2)Sealed electrical components shall be replaced.

11. Repairs to sealed components

1) During repairs to sealed components, all electrical supplies shall be disconnected from the equipment being worked upon prior to any removal of sealed covers, etc. If it is absolutely necessary to have an electrical supply to equipment during servicing, then a permanently operating form of leak detection shall be located at the most critical point to warn of a potentially hazardous situation.

2)Sealed electrical components shall be replaced.

12. Repair to intrinsically safe components

Do not apply any permanent inductive or capacitance loads to the circuit without ensuring that this will not exceed the permissible voltage and current permitted for the equipment in use. Intrinsically safe components must be replaced.

Replace components only with parts specified by the manufacturer. Other parts may result in the ignition of refrigerant in the atmosphere from a leak.

13. Cabling

Check that cabling will not be subject to wear, corrosion, excessive pressure, vibration, sharp edges or any other adverse environmental effects. The check shall also take into account the effects of aging or continual vibration from sources such as compressors or fans.

14. Detection of flammable refrigerants

Under no circumstances shall potential sources of ignition be used in the searching for or detection of refrigerant leaks. A halide torch (or any other detector using a naked flame) shall not be used. The following leak detection methods are deemed acceptable for all refrigerant systems. Electronic leak detectors may be used to detect refrigerant leaks but, in the case of FLAMMABLE REFRIGERANTS, the sensitivity may not be adequate, or may need re-calibration. (Detection equipment shall be calibrated in a refrigerant-free area.)

Ensure that the detector is not a potential source of ignition and is suitable for the refrigerant used. Leak detection equipment shall be set at a percentage of the LFL of the refrigerant and shall be calibrated to the refrigerant employed, and the appropriate percentage of gas (25% maximum) is confirmed.

Leak detection fluids are also suitable for use with most refrigerants but the use of detergents containing chlorine shall be avoided as the chlorine may react with the refrigerant and corrode the copper pipe-work. If a leak is suspected, all naked flames shall be removed/extinguished.

If a leakage of refrigerant is found which requires brazing, all of the refrigerant shall be recovered from the system, or isolated (by means of shut off valves) in a part of the system remote from the leak. Removal of refrigerant shall be according to Removal and evacuation.

15. Removal and evacuation

When breaking into the refrigerant circuit to make repairs -or for any other purpose

-- conventional procedures shall be used. However, for flammable refrigerants it is important that best practice be followed, since flammability is a consideration.

-- The following procedure shall be adhered to:

safely remove refrigerant following local and national regulations;

– purge the circuit with inert gas(optional for A2L);

-- evacuate(optional for A2L);

-- continuously flush or purge with inert gas when using flame to open circuit ;and

-- open the circuit .

The refrigerant charge shall be recovered into the correct recovery cylinders if venting is not allowed by local and national codes. For appliances containing flammable refrigerants, the system shall be purged with oxygen-free nitrogen to render the appliance safe for flammable refrigerants. This process might need to be repeated several times. Compressed air or oxygen shall not be used for purging refrigerant systems.
For appliances containing flammable refrigerants, refrigerants purging shall be achieved by breaking the vacuum in the system with oxygen-free nitrogen and continuing to fill until the working pressure is achieved, then venting to atmosphere, and finally pulling down to a vacuum (optional for A2L). This process shall be repeated until no refrigerant is within the system (optional for A2L). When the final oxygen-free nitrogen charge is used, the system. The outlet for the vacuum pump shall not be close to any potential ignition sources, and ventilation shall be available.

16. Charging procedures

In addition to conventional charging procedures, the following requirements shall be followed.

- Ensure that contamination of different refrigerants does not occur when using charging equipment. Hoses or lines shall be as short as possible to minimise the amount of refrigerant contained in them.
- Cylinders shall be kept in an appropriate position according to the instructions.
- Ensure that the REFRIGERATING SYSTEM is earthed prior to charging the system with refrigerant.
- Label the system when charging is complete (if not already).
- Extreme care shall be taken not to overfill the REFRIGERATING SYSTEM. Prior to recharging the system, it shall be pressure-tested with the appropriate purging gas. The system shall be leak-tested on completion of charging but prior to commissioning. A follow up leak test shall be carried out prior to leaving the site.

17. Decommissioning

Before carrying out this procedure, it is essential that the technician is completely familiar with the equipment and all its detail. It is recommended good practice that all refrigerants are recovered safely. Prior to the task being carried out, an oil and refrigerant sample shall be taken in case analysis is required prior to re-use of recovered refrigerant. It is essential that electrical power is available before the task is commenced.

a) Become familiar with the equipment and its operation.
b) Isolate system electrically.
c) Before attempting the procedure, ensure that:
- Mechanical handling equipment is available, if required, for handling refrigerant cylinders;
- All personal protective equipment is available and being used correctly;
- The recovery process is supervised at all times by a competent person;
- Recovery equipment and cylinders conform to the appropriate standards.

d) Pump down refrigerant system, if possible.
e) If a vacuum is not possible, make a manifold so that refrigerant can be removed from various parts of the system.
f) Make sure that cylinder is situated on the scales before recovery takes place.
g) Start the recovery machine and operate in accordance with instructions.
h) Do not overfill cylinders (no more than 80 % volume liquid charge).

I) Do not exceed the maximum working pressure of the cylinder, even temporarily.
j) When the cylinders have been filled correctly and the process completed, make sure that the cylinders and the equipment are removed from site promptly and all isolation valves on the equipment are closed off.
k) Recovered refrigerant shall not be charged into another REFRIGERATING SYSTEM unless it has been cleaned and checked.

18. Labelling

Equipment shall be labelled stating that it has been de-commissioned and emptied of refrigerant.
The label shall be dated and signed. For appliances containing FLAMMABLE REFRIGERANTS, ensure that there are labels on the equipment stating the equipment contains FLAMMABLE REFRIGERANT.

19. Recovery

When removing refrigerant from a system, either for servicing or decommissioning, it is recommended good practice that all refrigerants are removed safely. When transferring refrigerant into cylinders, ensure that only appropriate refrigerant recovery cylinders are employed. Ensure that the correct number of cylinders for holding the total system charge is available. All cylinders to be used are designated for the recovered refrigerant and labelled for that refrigerant (i. e. special cylinders for the recovery of refrigerant). Cylinders shall be complete with pressure-relief valve and associated shut-off valves in good working order. Empty recovery cylinders are evacuated and, if possible, cooled before recovery occurs.
The recovery equipment shall be in good working order with a set of instructions concerning the equipment that is at hand and shall be suitable for the recovery of the flammable refrigerant. If in doubt, the manufacturer should be consulted. In addition, a set of calibrated weighing scales shall be available and in good working order. Hoses shall be complete with leak-free disconnect couplings and in good condition.
The recovered refrigerant shall be processed according to local legislation in the correct recovery cylinder, and the relevant waste transfer note arranged. Do not mix refrigerants in recovery units and especially not in cylinders.
If compressors or compressor oils are to be removed, ensure that they have been evacuated to an acceptable level to make certain that flammable refrigerant does not remain within the lubricant. The compressor body shall not be heated by an open flame or other ignition sources to accelerate this process. When oil is drained from a system, it shall be carried out safely.

General Safety Instruction

1. The appliance is for indoor use only.
2. Do not use the unit on a socket under repairs or not installed properly
3. Do not use the unit, follow these precautions:
   A: Near to source of fire.
   B: An area where oil is likely to splash.
   C: An area exposed to direct sunlight.
   D: An area where water is likely to splash.
4. All the sockets must comply with the local electric safety requirements. If necessary, please check it for the requirements.
5. Children should be supervised to ensure that they do not play with the appliance.

6. If the supply cord is damaged, it must be replaced by the manufacturer, its service agent or similarly qualified persons in order to avoid a hazard.
7. Children should be supervised to ensure that they do not play with the appliance.
8. This appliance is not intended for use by persons (including children) with reduced physical, sensory or mental capabilities, or lack of experience and knowledge, unless they have been given supervision or instruction concerning use of the appliance by a person responsible for their safety.
9. That the appliance shall be installed in accordance with national wiring regulations.
10. The applicable operating temperature range for this unit is 41℉ -95℉ ;
Model Specifications for Fuse : 3.15A,250VAC;

Recycling



This marking indicates that this product should not be disposed with other household wastes. To prevent possible harm to the environment or human health from uncontrolled waste disposal recycle it responsibly to promote the sustainable reuse of material resources. To return your used device, please use the return and collection systems or contact the retailer where the product was purchased. They can take this product for environmental safe recycling.

11. Contact authorized service technician for repair or maintenance of this unit.
12. Do not pull deform. or modify the power supply cord, or immerse it in water. Pulling or misuse of the power supply cord can result in damage to the unit and cause electrical shock.
13. Compliance with national gas regulations shall be observed.
14. Keep ventilation openings clear of obstruction.
15. Any person who is involved with working on or breaking into a refrigerant circuit should hold a current valid certificate from an industry-accredited assessment authority, which authorizes their competence to handle refrigerants safely in accordance with an industry r ecognized assessment specification.
16. Servicing shall only be performed as recommended by the equipment manufacturer. Maintenance and repair requiring the assistance of other skilled personnel shall be carried out under the supervision of the person competent in the use of flammable refrigerants.
17. Do not operate or stop the unit by inserting or pulling out Die power plug, it may cause electric shock or fire due to heat generation.
18. Unplug the unit if strange sounds, smell, or smoke comes from it.
19. Install the dehumidifier on flat surface to minimize vibration and or noise.
20. Inspect the power cord before use. Never operate the dehumidifier when the power cord or plug is damaged.
21. Insert the three-prong plug on the power cord into a matching electrically grounded outlet.
22. Do not use an adapter. Never cut off the third prong. Do not use an extension cord.
23. Do not operate the dehumidifier in standing water. Keep motor and wiring dry.
24. Never immerse the dehumidifier into water or other liquids.
25. Do not put the dehumidifier close to heat-generating devices, including flammable or dangerous materials.

26. Unplug the power supply before cleaning or storing the dehumidifier. Always grasp the plug (not the cord) to unplug.
27. Do not put fingers or other items into air inlet or air outlet.
28. Never insert any other objects into the dehumidifier body.
29. Do not sit, stand or put heavy objects on the dehumidifier.

-If any parts damage, please contact the dealer or a designated repair shop;
-In case of any damage, please turn off the air switch, disconnect the power supply, and contact the dealer or a designated repair shop;
-In any case, the power cord shall be firmly grounded.
-To avoid the possibility of danger, if power cord is damaged, please turn off the air switch and disconnect the power supply. It must be replaced from the dealer or a designated repair shop.



Never repair or remove plug and or power cord. Any repairs should be completed by qualified electrician or distributor.

PARTS IDENTIFICATION

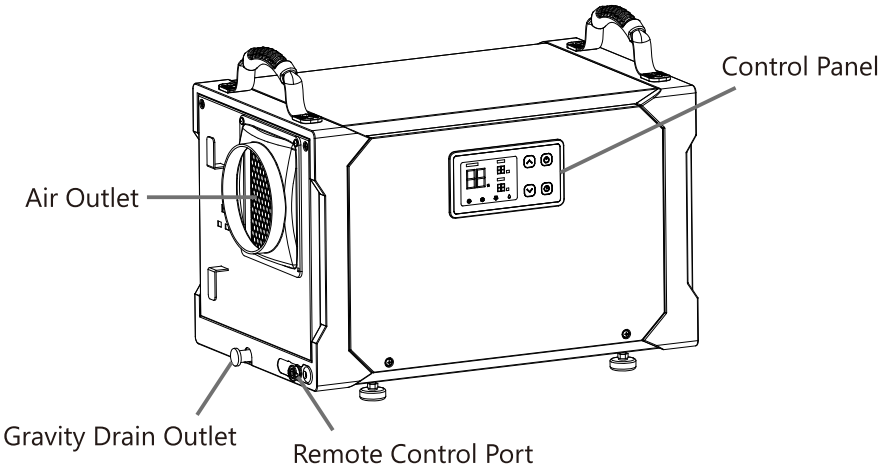

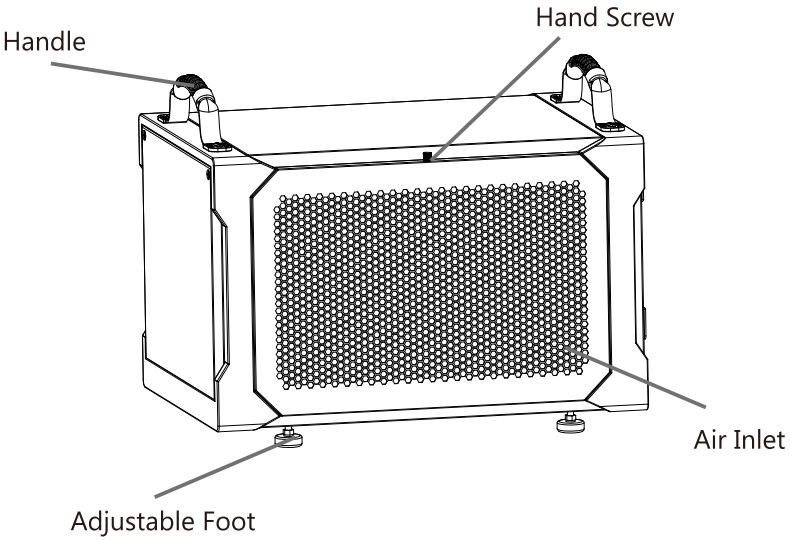

Note: Do not obstruct the air inlet and outlet.

OPERATION INSTRUCTIONS

1. Position Your Dehumidifier

- Keep the dehumidifier on a level surface to reduce vibrations and noise.
- Position your dehumidifier away from walls and surrounding objects, leaving at least 10 feet of clearance at both the air inlet and outlet to ensure optimal airflow.

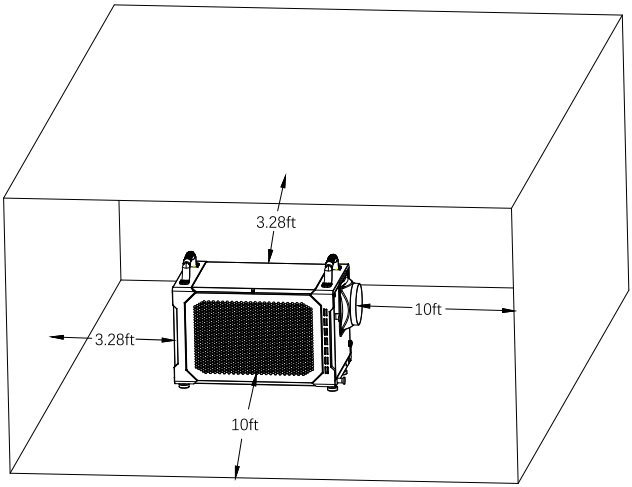

<u>To adjust the feet</u>,

- Turn the nut in a clockwise direction to get the nut loosen;
- Turn the foot in a clockwise direction to get the foot down or turn the foot in a counterclockwise direction to get the foot up;
- Turn the nut in a counterclockwise direction to fix the foot.

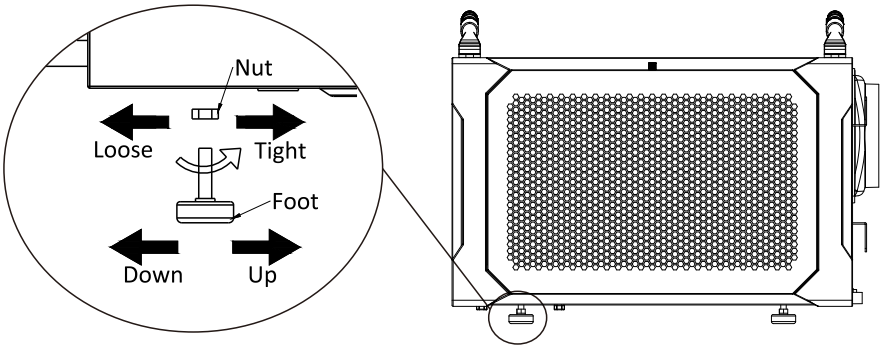

2. Connect the Drain Hose

- Attach one end of the drain hose to the Gravity Drain Outlet of the dehumidifier;
- Position the other end of the hose towards a drainage facility that is located lower than the dehumidifier's drain outlet.

Note: Ensure the hose is positioned with a downward slope to allow water to flow freely. Avoid any kinks, twists, loops,or other obstructions that could block drainage. For best results, place the dehumidifier on an elevated surface or suspend it to maintain a smooth water flow.

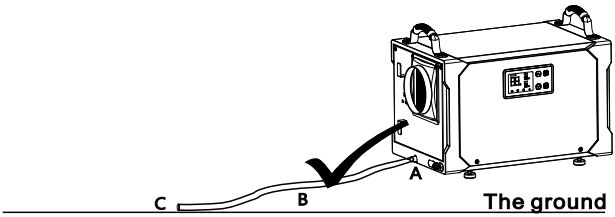

3. Plug in Electrical Cord

IMPORTANT

Please let the dehumidifier sit outside the box for **24 hours** before initial plugging in.

To properly operate the dehumidifier, please plug it into a GFCI-protected 120-volt outlet with a rating of at least 10 amps. Uncoil the power cord and securely connect it to an appropriate outlet.

Note: When the dehumidifier is first plugged into AC power, the control panel display will light up for a second, which is part of the dehumidifier's self-diagnosis procedure and no action is required. This indicates that the dehumidifier is functioning correctly and ready to operate effectively. You will still need to press the POWER button to turn the dehumidifier on. If not been operated for over 50 seconds, the control panel will become dime until pressed buttons again.

4. Understand the Control Panel

The control panel of the dehumidifier features a user-friendly interface with 4 buttons and an LED screen. Press the POWER Button to turn the dehumidifier on. After turning on the dehumidifier, the LED screen will display the readouts.

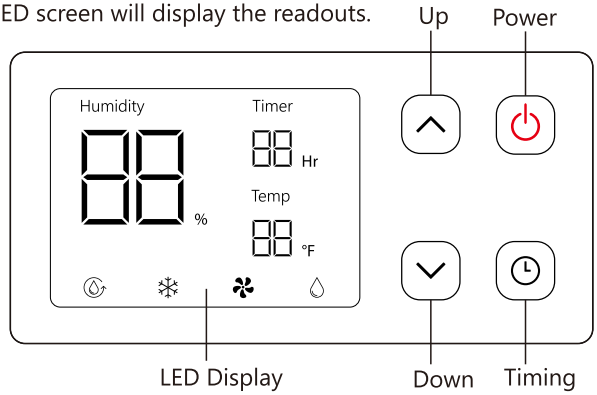

Humidity
88% is humidity percentage value. If no operations on the control panel, this number is the humidity readout of the inlet air the dehumidifier detects which is similar to the current room humidity level. When you are pressing the ^ or v button to set the target humidity percentage value, this digital number will turn to display the previous setting value and keep blinking.

Temp
88°F is the temperature readout of the inlet air the dehumidifier detects which is similar to the current room temperature.

Timer
88Hr illuminates when the timer function is enabled and disappears when the timer function is disabled.

Fan Icon: It illuminates when the fan is running and disappears when the compressor stops running.

Water Droplet Icon: It illuminates when the compressor is running and disappears when the compressor stops running.

Note:

In the following cases, it is normal if the water droplet icon disappears which means the compressor stops or does not kick in.

A. The humidity set-point is NOT at least 5% lower than the room humidity readout value (in this case, please double-check your setting);
B. The room humidity level has reached the set-point, so the dehumidifier automatically stops running;
C. The dehumidifier was just turned on and may take a few seconds for the compressor to kick in;
D. The dehumidifier was restarted in a brief moment, the compressor is under delay protection status.

Defrosting icon: It illuminates when the dehumidifier detects frost on the interior. During defrosting, the fan operates while the compressor does not, and the defrost icon flashes until the frost melts. The dehumidifier will automatically begin to dehumidify and the "Defrost" icon will disappear once the defrosting process is complete.
Note: Frequent defrosting indicates that the room temperature is too low. It is recommended to add heat when the room temperature is lower than 60°F for proper drying.

CONTINUOUS MODE: This icon illuminates when the humidity set point is 10%, which means the dehumidifier will dehumidify continuously.

Power: Press once to turn the power on and off.

Up and Down Buttons: Press to increase or decrease the set-point of humidity level.

Timer Button: Press to check the settings, and set AUTO on/off timer.

5. General Operation Instructions

(1) Turn on the dehumidifier
Press the Power Button to turn on the dehumidifier.

(2) Set a desired humidity percentage
First of all, read the current room humidity readout on the left of the display and remember that value. Then, press the or down button to adjust the humidity set-point in increments of 1%. The set humidity value needs to be at least 5% lower than the current room humidity readout value.
Note: The humidity set-point is between 10% and 90%. A humidity setting between 40% and 60% is recommended for optimal comfort. Last, after selecting your target value, wait for 5 seconds for the setting to register automatically. This will ensure that your desired humidity level is set and maintained. Then, the dehumidifier will automatically stop and restart to maintain the room humidity level within a range of ±3% of the set point. For instance, if the set humidity is 50%, the dehumidifier automatically stops when the room humidity reaches 47% and then automatically restarts when the room humidity rises back to 53% or higher.

(3) Turn the dehumidifier off
Press the Power Button to turn off the dehumidifier.
Note: To protect the compressor, the fan will continue to operate for 30 seconds after the dehumidifier shut off. Use the power button to stop the dehumidifier rather than forcibly by disconnecting the power cord.

6. Timer Setting

It enables you to either delay the auto-on or auto-off function of the dehumidifier from 1 to 24 hours.

- Set AUTO-ON: When the dehumidifier is off, press the Timer button to set a desired time it begins to work.
- Set the dehumidifier AUTO-OFF: When the dehumidifier is on, press the Timer button to set a desired time it shuts off.

Set the TIMER by the Below Steps

1. Press the Timer Button and the Timer icon and value Timer 88 Hr lights up and flashes.
2. Adjust the timer setting by pressing the Timer button repeatedly to change the delay timer at 1-hour increments, up to 24 hours.
3. After selecting the target time period, just wait for about 5 seconds to let the setting register automatically.
4. The digital readout will count down the remaining time until the dehumidifier either starts or stops.
5. To disable the timer function, manually turn the dehumidifier on/off, or set the timer to 88 H .

NOTE:

- Before entering the AUTO ON TIMER setting, ensure that power is being supplied to the dehumidifier.
- For the AUTO ON setting, please turn on the dehumidifier to select a desired humidity level. Otherwise, it will be the same as the previous setting.
- Set AUTO ON timer only when the dehumidifier is off or set AUTO OFF timer when the dehumidifier is on, but not be able to set both AUTO ON and AUTO OFF timer at the same time.
- The AUTO ON/OFF function won't be cycling.
- The TIMER function will be disabled when the dehumidifier was powered on/off manually.
- Set the timer as 88 H , the timer function will not be activated.

7. Smart Functions

(1) 3 Minutes Compressor Protection Mechanism

It prevents the dehumidifier from starting immediately after a complete cycle to avoid any potential damage. The compressor will start automatically after a 3-minute delay. During this time, the Fan icon is illuminating continuously on the LED screen and until the compressor kicks in, the water droplets icon illuminates. That's to say, if the dehumidifier was turned off and then restarted immediately, the compressor will not kick in until 3 minutes later.

(2) Auto Defrost

The compressor cycles off when frost builds up on the evaporator coils and the fan will continue to run until the frost disappears. Meanwhile, the DEFROST icon will light up on the LED screen during the defrosting process.

(3) Auto-Restart

If the dehumidifier shuts off unexpectedly due to power outage, the dehumidifier will restart with the previous function settings automatically when the power resumes.

MAINTENANCE

To avoid possible electric shock, ensure to turn the dehumidifier off and disconnect the plug from the power source before performing any cleaning or maintenance.

1. Cleaning the Dehumidifier

Clean the dehumidifier housing with a soft damp cloth. Do not submerge or place water on the dehumidifier or control panel. Water may damage the electronic components of the dehumidifier.

Do not use chemical solvents such as benzene, alcohol, gasoline or other heavy-duty cleaners. The surface may become damaged or deformed.

2. Cleaning the Air Filter

The working performance of the dehumidifier will be greatly reduced if the filter becomes blocked. The air filter should be cleaned approximately every 2 weeks and may require more frequent cleaning if there is significant dander or fur in the air. The air filter is located behind the inlet grill.

Follow the steps below to clean the filter :

- Use both hands to directly pull apart the intake grill, as it has magnets on it, so you can easily separate the intake grill with just a little force, pull out the intake grille and remove the filter.
- Use a vacuum cleaner with a soft brush attachment to remove any large debris or dust build -up from the filter.
- Wash the filter in lukewarm, soapy water, below 40°C (104°F), or use a neutral cleaning agent.
- Rinse the filter with clean water and dry thoroughly.
- Re-install the filter.

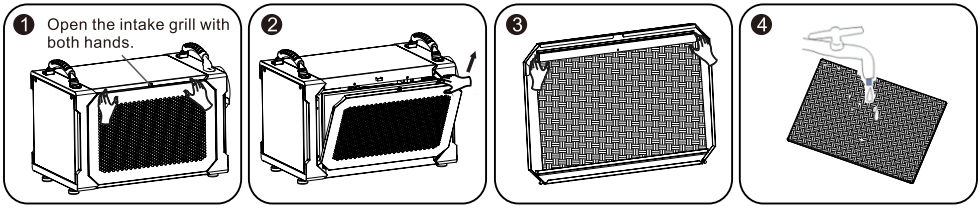

NOTE: DO NOT operate the dehumidifier without a filter because dirt and lint will clog it, hence reducing performance.

Trouble Shooting Guide

Trouble shooting Chart

Below chart will help you solve common problems may occur. If the problem coming across can not be fixed after troubleshooting or not being listed in the below troubleshooting chart, please contact **MOISWELL** customer service to get professional support at service@moiswell.com.

Problem	Possible Cause	Solution
Dehumidifier does not operate	No power to dehumidifier	Plug it into a working outlet
	Not turned on	Turn the dehumidifier on
	Has not set it properly	Make sure the set humidity level is at 3% lower than the inlet humidity reading
	Error code displays	Contact customer service
Dehumidifier collects little water	Too low humidity level	Try again until the humidity level exceeds 40%
	Insufficient working time	Allow more working time
	Filter is blocked	Clean filter
	Air Inlet or Outlet is blocked	Clear the obstructions
	Low ambient temperature	Heat up the room
	Condensate hose is blocked	Check hose for restrictions
dehumidifier operating, but room not dry	Doors and windows are open	Seal room from external areas
Abnormal Noise	The dehumidifier has not been placed properly	Place the dehumidifier in a horizontal position
	Filter is blocked	Clean filter

Problem	Possible Cause	Solution
Humidity reading remains at 10RH%, (far from the actual room humidity)	Humidity sensor failure	Set the target humidity percentage value at 10RH%, the dehumidifier works normally, which means this failure does not affect the function of this dehumidifier.
		Repair and replace the humidity sensor.
Humidity reading remains at "99%RH" (far from the actual room humidity)	Water on the surface of the humidity sensor	Please let the dehumidifier work for a period of time, the humidity reading will get normal after the water on the surface of the humidity sensor is evaporated.
	Humidity sensor failure	The dehumidifier works normally, which means this problem does not affect the function of this dehumidifier.
		Repair and replace the humidity sensor.

Note: It is normal that the dehumidifier pulls warm air out.

WARRANTY

This warranty applies only to products purchased from MOISWELL or its authorized dealers and must be installed, operated, and maintained according to the provided instructions.

2 Years Full Warranty (1 year standard + 1 year with registration)

MOISWELL warrants to the original purchaser that this product is free from defects in materials and workmanship for 2 years from the date of purchase. During this period, MOISWELL will, at its discretion, repair or replace any defective parts or dehumidifiers. In rare cases where repair or replacement is not feasible, a refund may be issued as a last resort.

5 Years Limited Warranty on Refrigeration System

The refrigeration system-including compressor , condenser, and evaporator-is warranted against defects in materials or workmanship for five years from the purchase date. Labor and shipping costs are excluded after the initial two-year full warranty period.

Exclusions

This warranty does not cover:

(1) Damage resulting from:

- Normal wear and tear
- Misuse, abuse, accidents, or failure to follow the operating instructions
- Exposure to liquids or foreign particles
- Unauthorized servicing or modifications

(2) Second-hand products or products purchased through liquidation sales.

(3) Products purchased from unauthorized dealers.

While these terms define our warranty, we encourage customers to contact us with any concerns,regardless of warranty status. We are committed to delivering the best possible support.

For assistance, please contact MOISWELL customer service at service@moiswell.com .

Website

www.moiswell.com

Email

service@moiswell.com

Dehumidify Like a Pro with Moiswell !

3070400725 2D307-04046(00)