ASSEMBLY INSTRUCTION

Lawhon Kitchen Island

ITEM NO.:

NO.	ITEM	DESCRIPTION	SPEC.	QTY
A		Hexagon bolt	M8×70	12PCS
B		Lock washer	M8	12PCS
C		Washer	20×8	12PCS
D		Allen key	M8	1PC

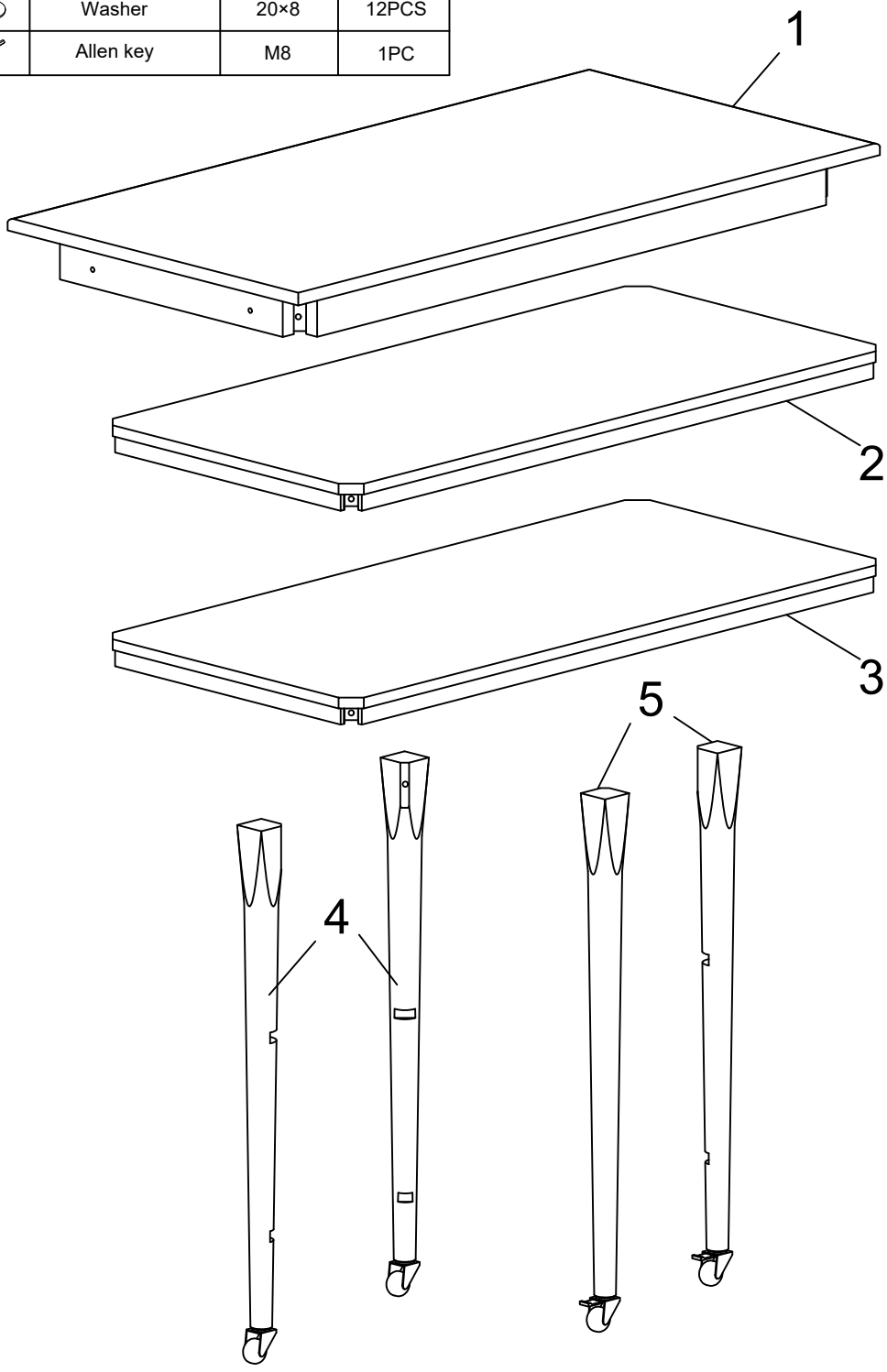

ASSEMBLY INSTRUCTION

Lawhon Kitchen Island

1

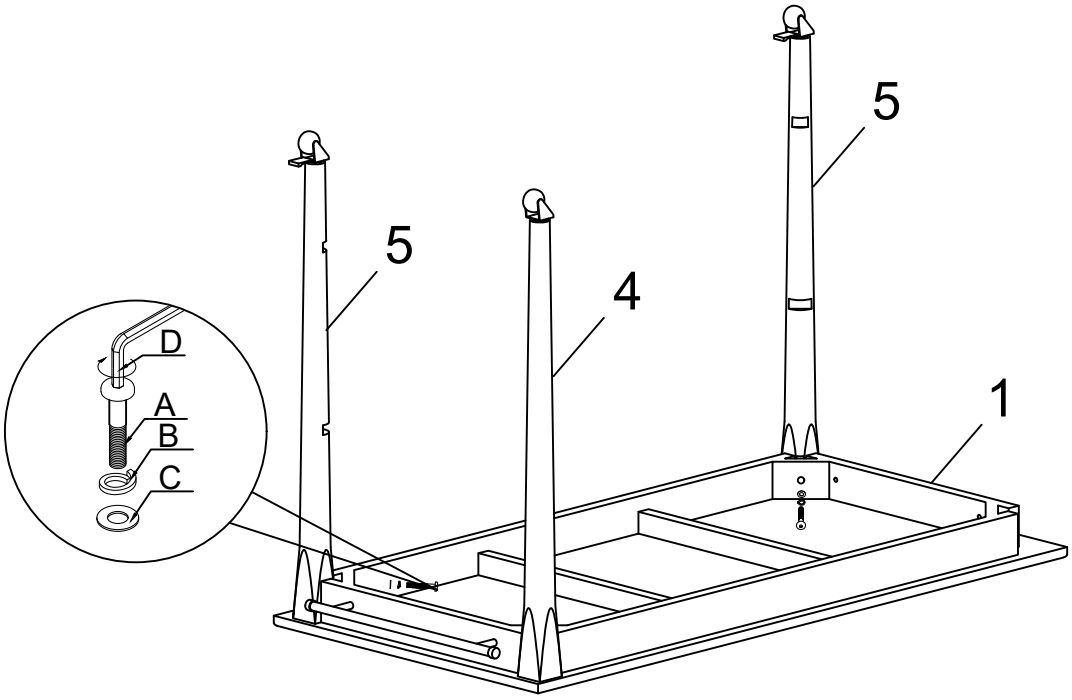

2

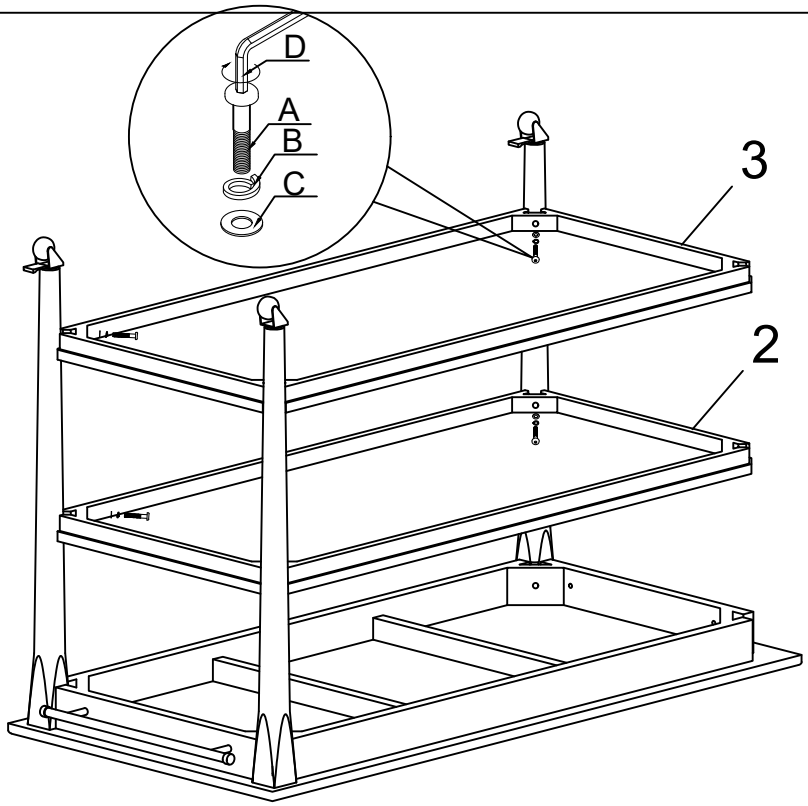

ASSEMBLY INSTRUCTION

Lawhon Kitchen Island

3

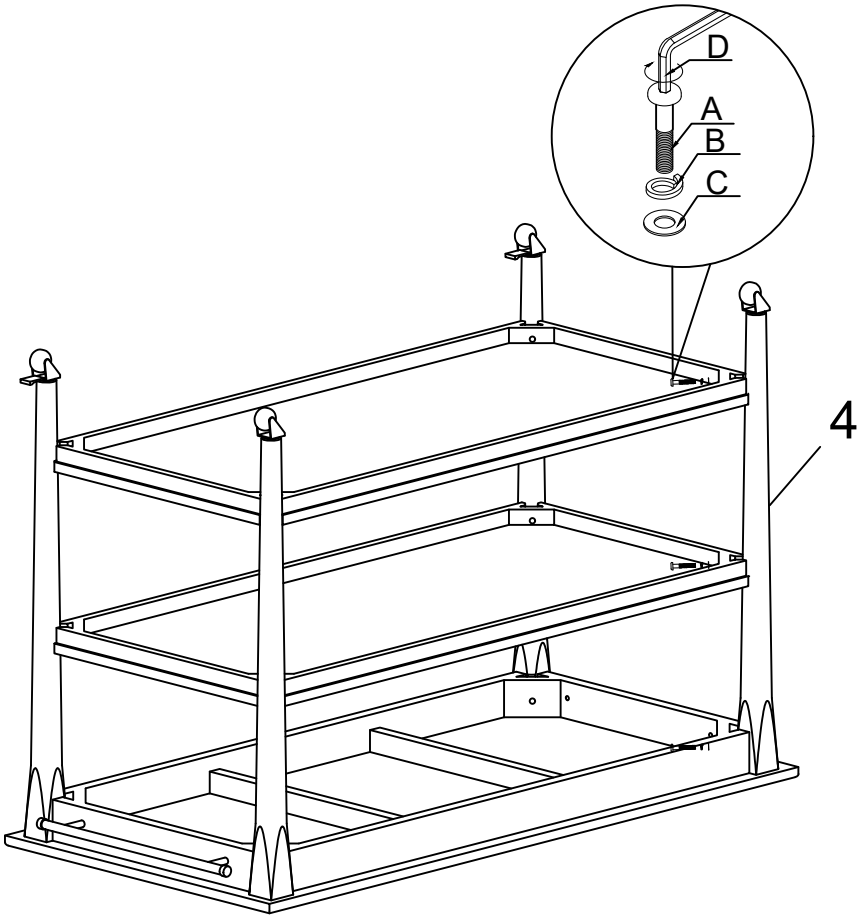

4

