ALTAIR

Fashion Bathroom Life

INSTALLATION SPECIFICATION

SKU	CTP70284-VW
Product Dimensions	84"*22"*1.6"
Sink-External Dimensio	20.1"*15"*7.1"
Sink-Internal Dimension	18.1"*13"*5.5"
Countertop thickness	1.6"
Drain hole diameter	Ø1.77"
Weight	182.7 lbs
Material	Quartz
Color Finish	White
Edge Polishing	Flat Edge
Foucet Hole Spacing(in.)	Three holes
Bowl	Double bowl

ARUNDEL

84 x 22"

Bathroom Vanity Top

All measurements are aoproximate.Measurements may vary +/-1/2"

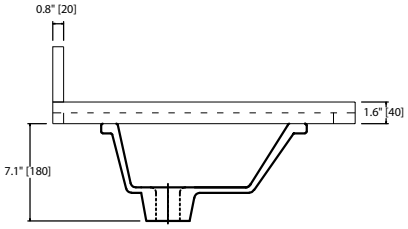

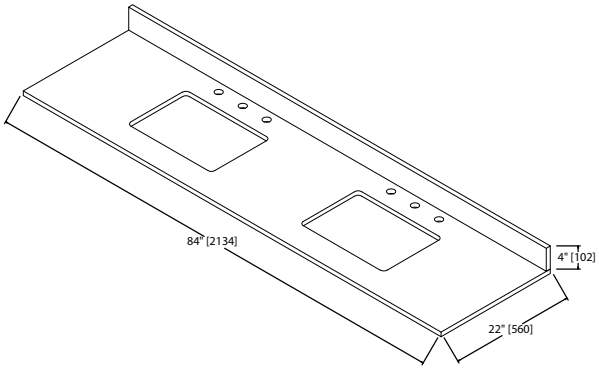

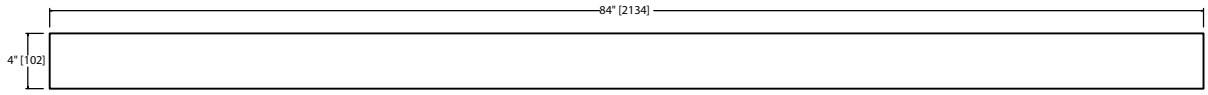

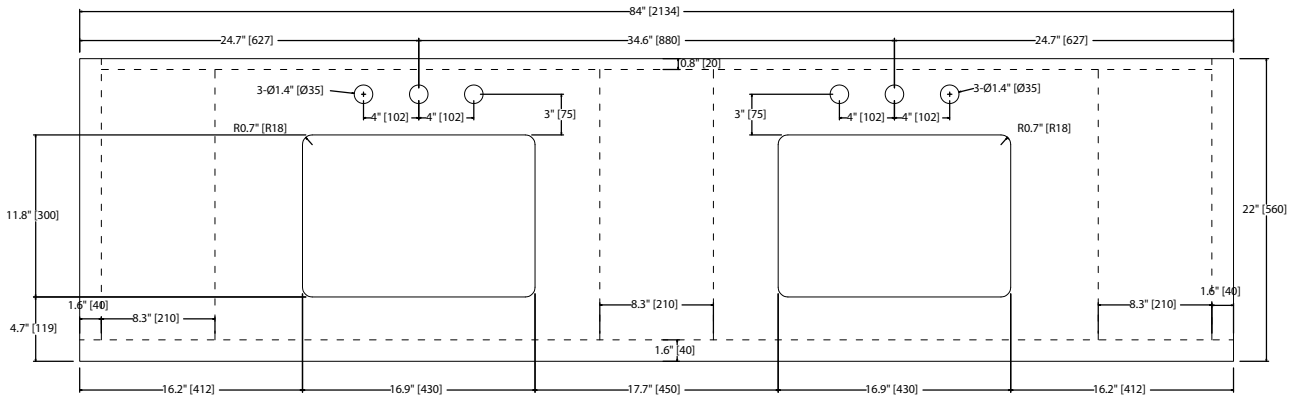

ALTAIR

www.altairdesignusa.com