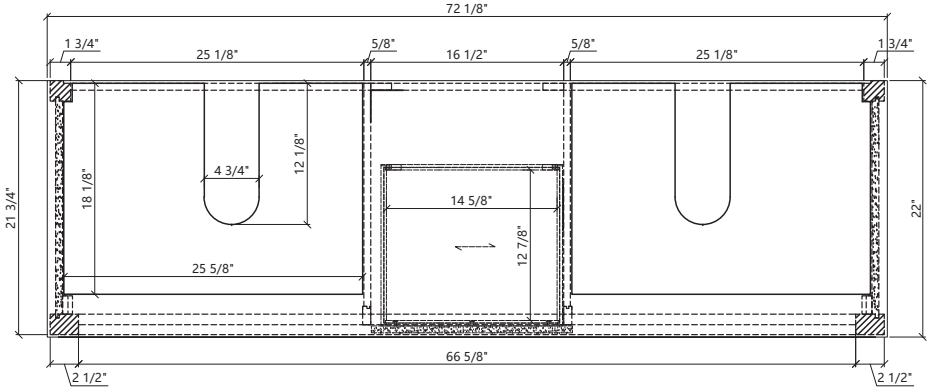
72 1/8"
1 3/4"
25 1/8"
5/8"
16 1/2"
5/8"
25 1/8"
1 3/4"
21 3/4"
18 1/8"
12 1/8"
4 3/4"
14 5/8"
12 7/8"
22"
25 5/8"
66 5/8"
2 1/2"
2 1/2"

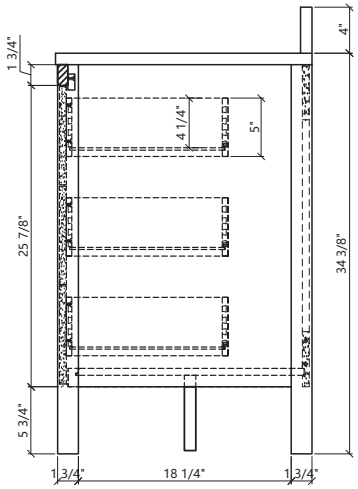
4"
1 3/4"
4 1/4"
5"
25 7/8"
34 3/8"
5 3/4"
1 3/4"
18 1/4"
1 3/4"

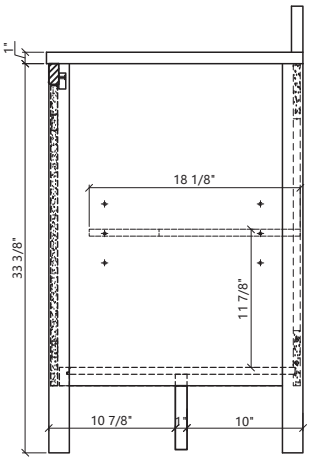
1"
18 1/8"
33 3/8"
11 7/8"
10 7/8"
1"
10"

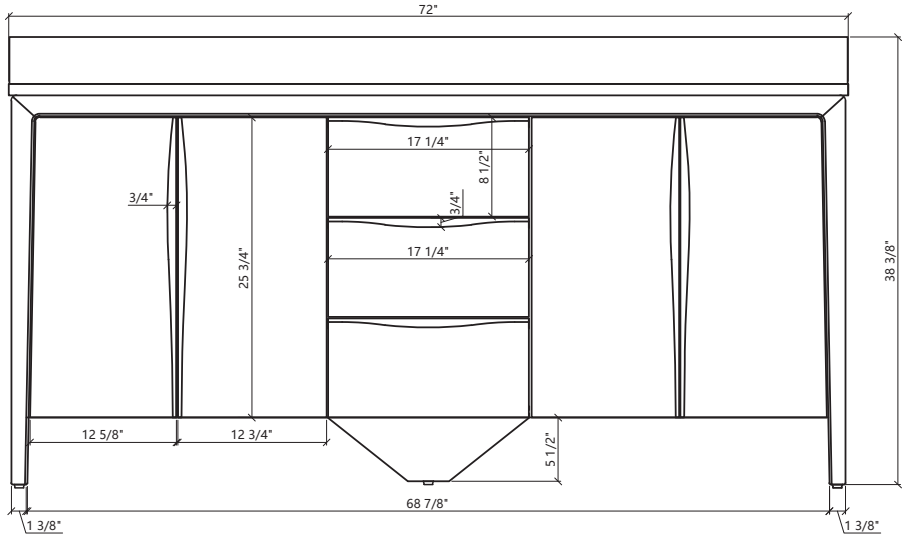
72"
17 1/4"
8 1/2"
3/4"
3/4"
17 1/4"
25 3/4"
38 3/8"
12 5/8"
12 3/4"
5 1/2"
68 7/8"
1 3/8"
1 3/8"

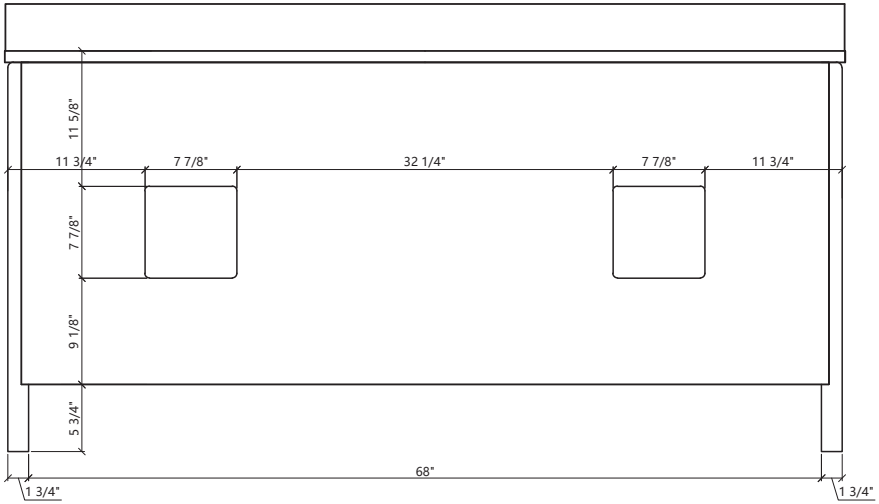
11 5/8"
11 3/4"
7 7/8"
32 1/4"
7 7/8"
11 3/4"
7 7/8"
9 1/8"
5 3/4"
68"
1 3/4"
1 3/4"

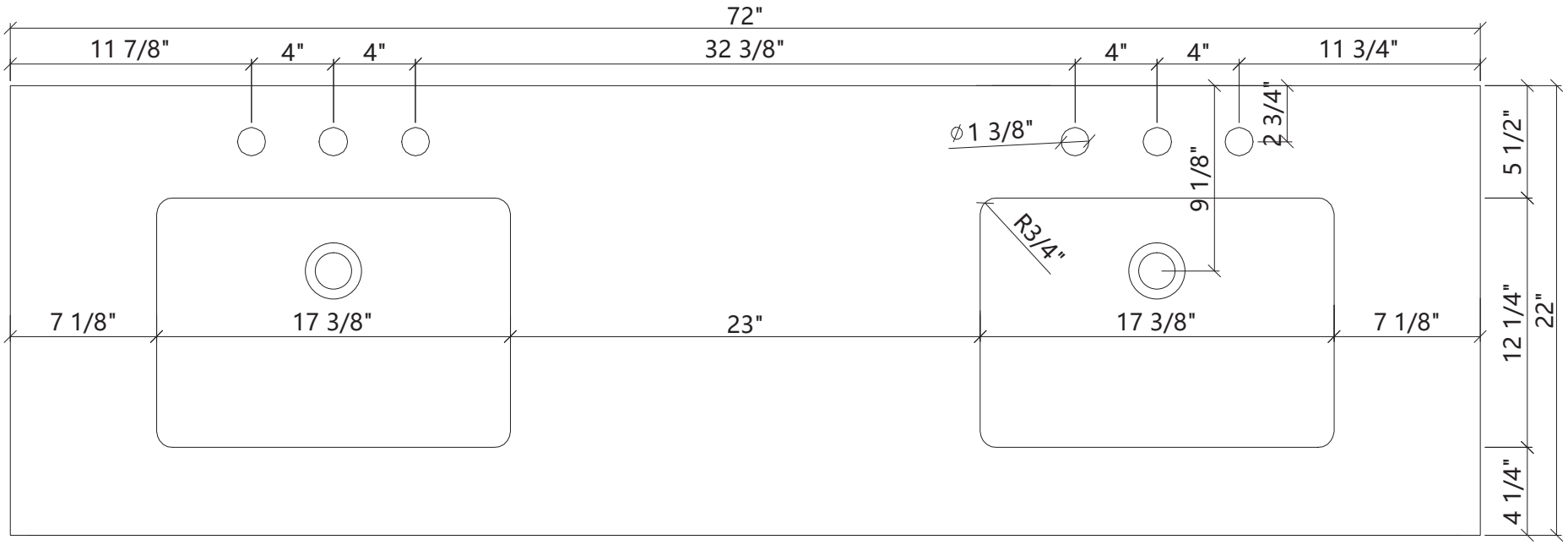
72"
11 7/8"
4"
4"
32 3/8"
4"
4"
11 3/4"
∅1 3/8"
2 3/4"
9 1/8"
R3/4"
5 1/2"
12 1/4"
22"
4 1/4"
7 1/8"
17 3/8"
23"
17 3/8"
7 1/8"

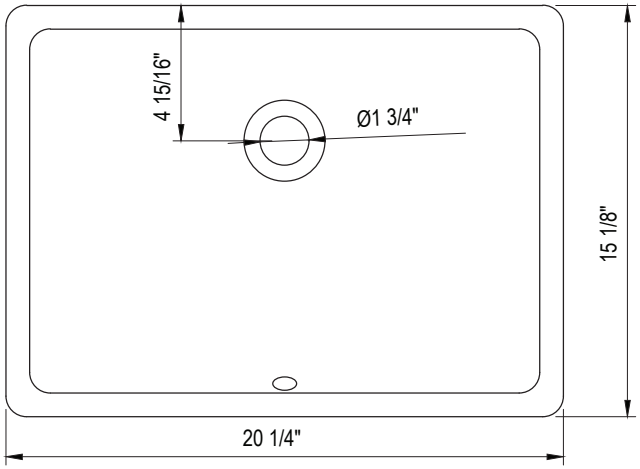
4 15/16"
Ø1 3/4"
15 1/8"
20 1/4"

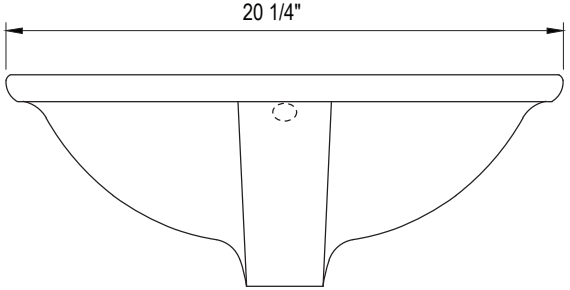
20 1/4"

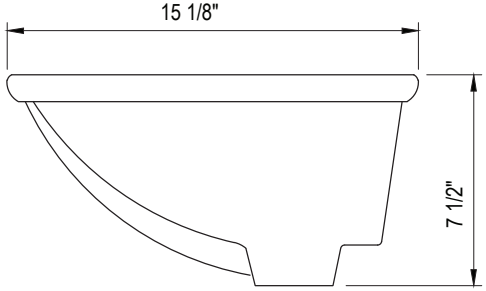
15 1/8"
7 1/2"