Assembly Instructions

Product introduction:

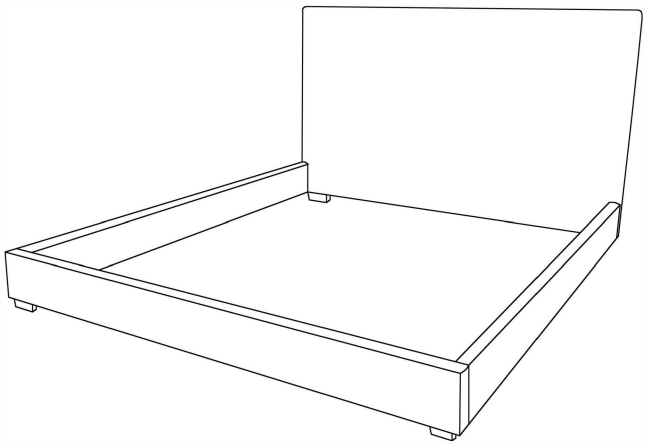

Components:

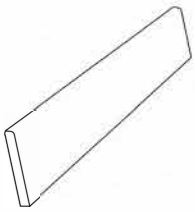

A: 2 pieces

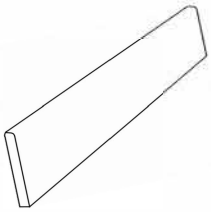

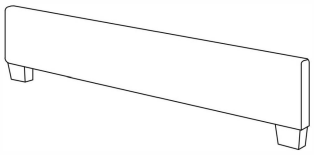

B: 1 piece

C: 1 piece

Assemble steps:

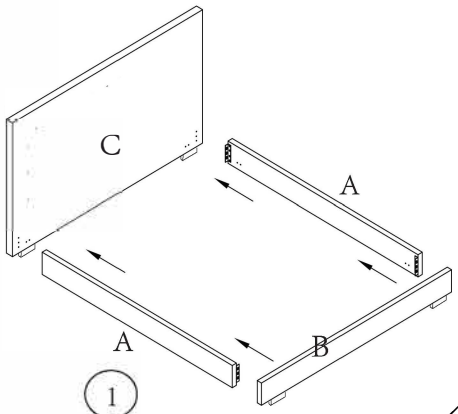

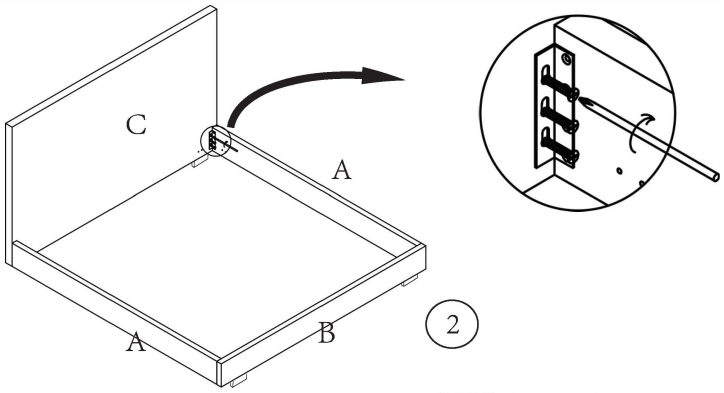

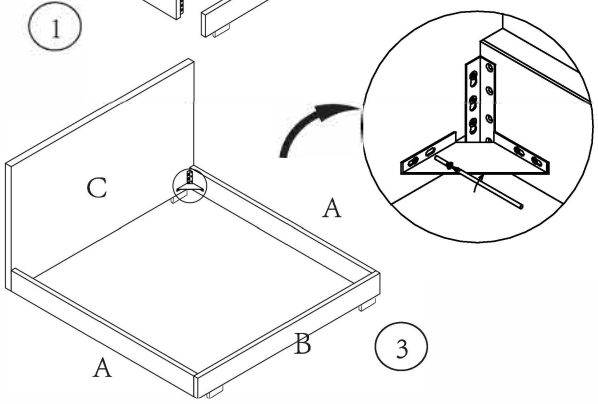

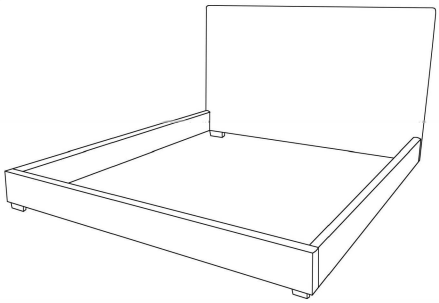

Assembly Instructions

Product introduction:

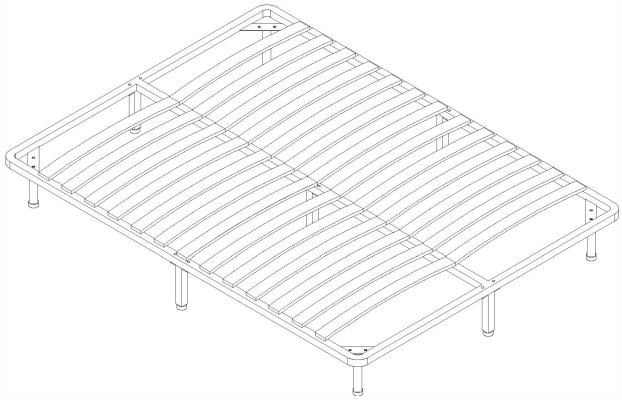

Components:

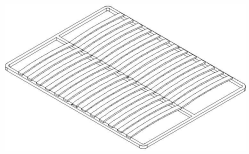

A: 1 piece

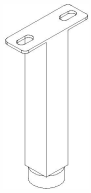

B: 9 pieces

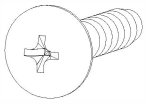

C: 8 pieces

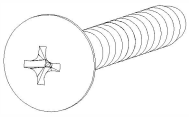

D: 10 pieces

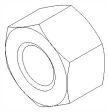

E: 18 pieces
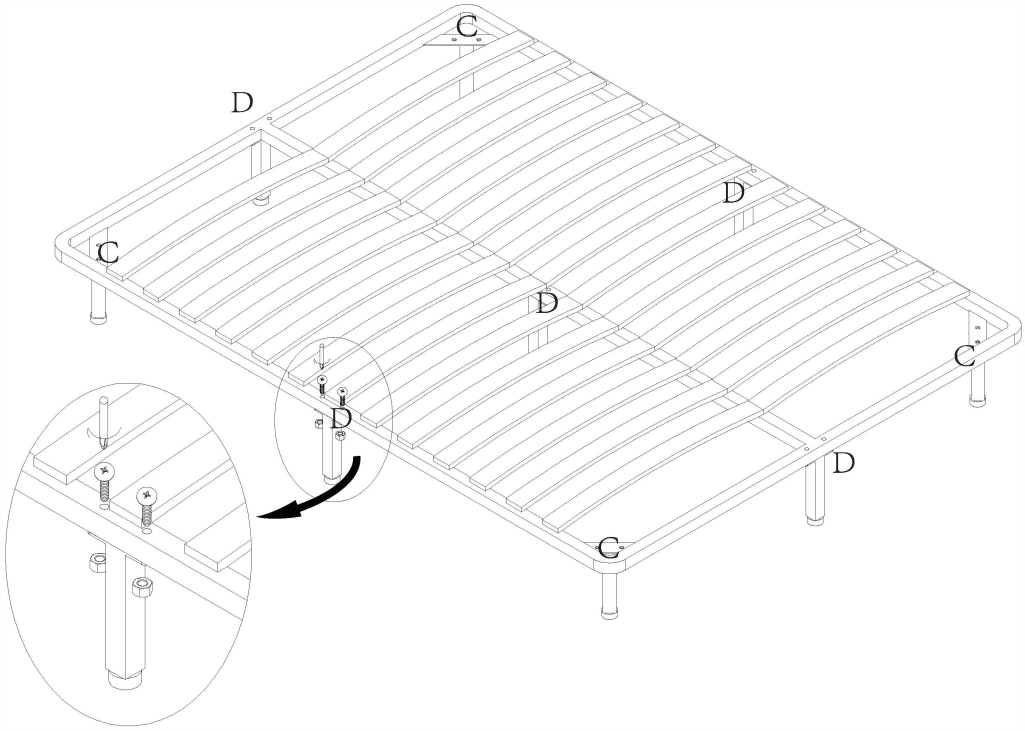
Assemble steps: