CARE AND MAINTENANCE

Store outdoor furniture indoors or cover well when not in use.
Remove wooden furniture from standing water. Dust regularly with small brush or vacuum
Spills should be taken care of immediately before they harden or
stain with a slightly dampened sponge.

NOTICE

* Please make sure that you have all parts indicated before you begin assembly of this item
* This item should be assembled on a soft surface to prevent scratching the finish during assembly
* This item may require periodic tightening

Weight Capacity : 600 Ibs
Warning : Do not stand on chair
Warning : Do not over torque bolts / screws

WARNING

Part List and Hardware List

PIECE	DESCRIPTION	PICTURE	QUANTITY
A	Back Frame	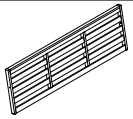	1X
B	Seat frame	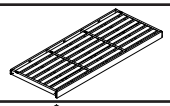	1X
C	Leg Side Frame	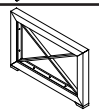	2X
D	Cushion Back		3X
E	Cushion Seat	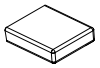	3X
F	Screw	M7X90	4X
G	Bolt	M8X45	6X
H	Allen key	LG4	2X

Product Dimensions:84.8" W x 36.2" D x 30.4" H

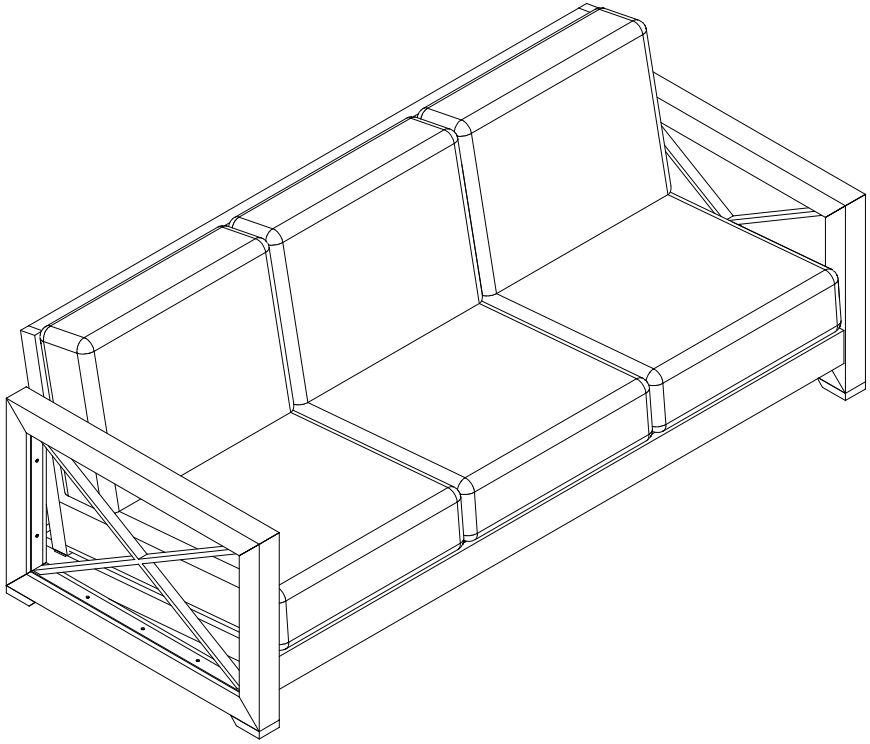

PREPARATION

Before beginning assembly of product, make sure all parts are present. Compare parts with package contents list and hardware contents list.
If any part is missing or damaged, do not attempt to assemble the product.
Estimated Assembly Time: 10 minutes.
Tools Required for Assembly (included): Allen Key

1

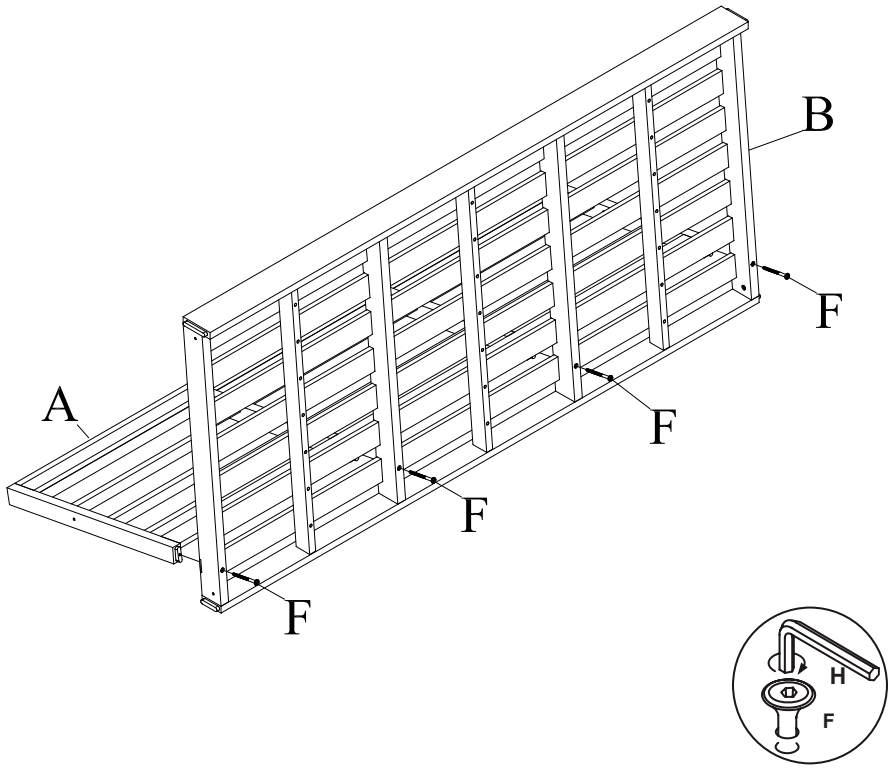

2

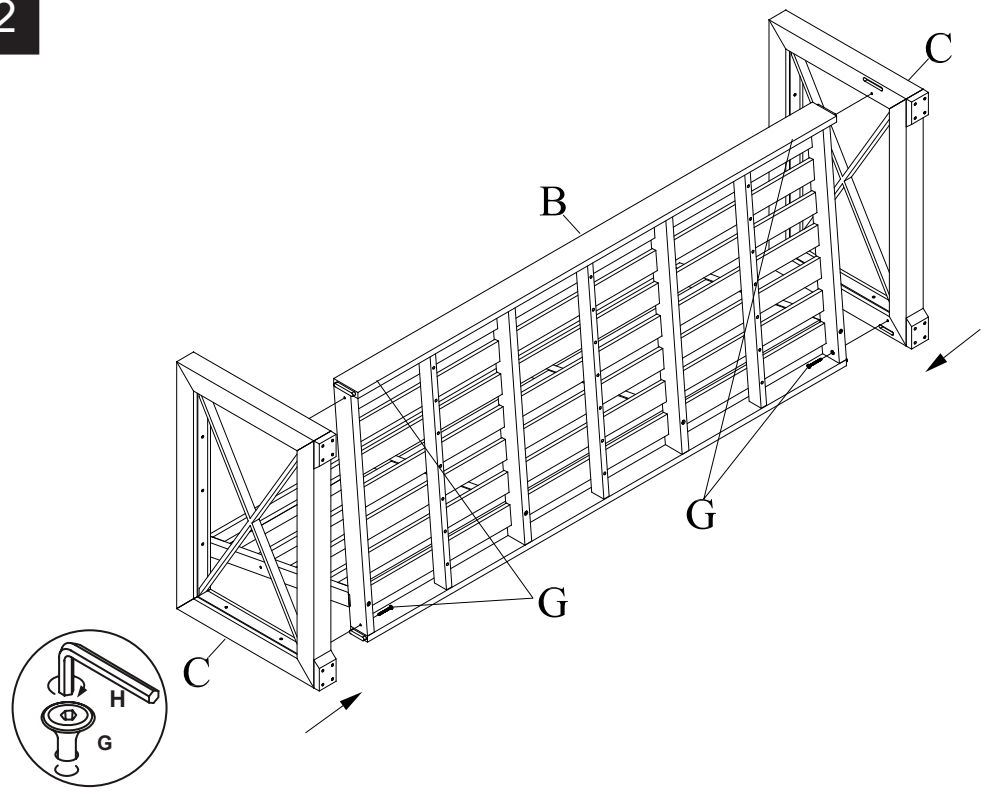

Step 1

Attach Back Frame (A) to Seat Frame (B). Use Screw (F) tighten with Allen Key (H).

Step 2

Insert Leg Side Frame (C) to Seat Frame (B). Use Bolt (G) tighten with Allen Key (H).

PREPARATION

Before beginning assembly of product, make sure all parts are present. Compare parts with package contents list and hardware contents list.
If any part is missing or damaged, do not attempt to assemble the product.
Estimated Assembly Time: 10 minutes.
Tools Required for Assembly (included): Allen Key

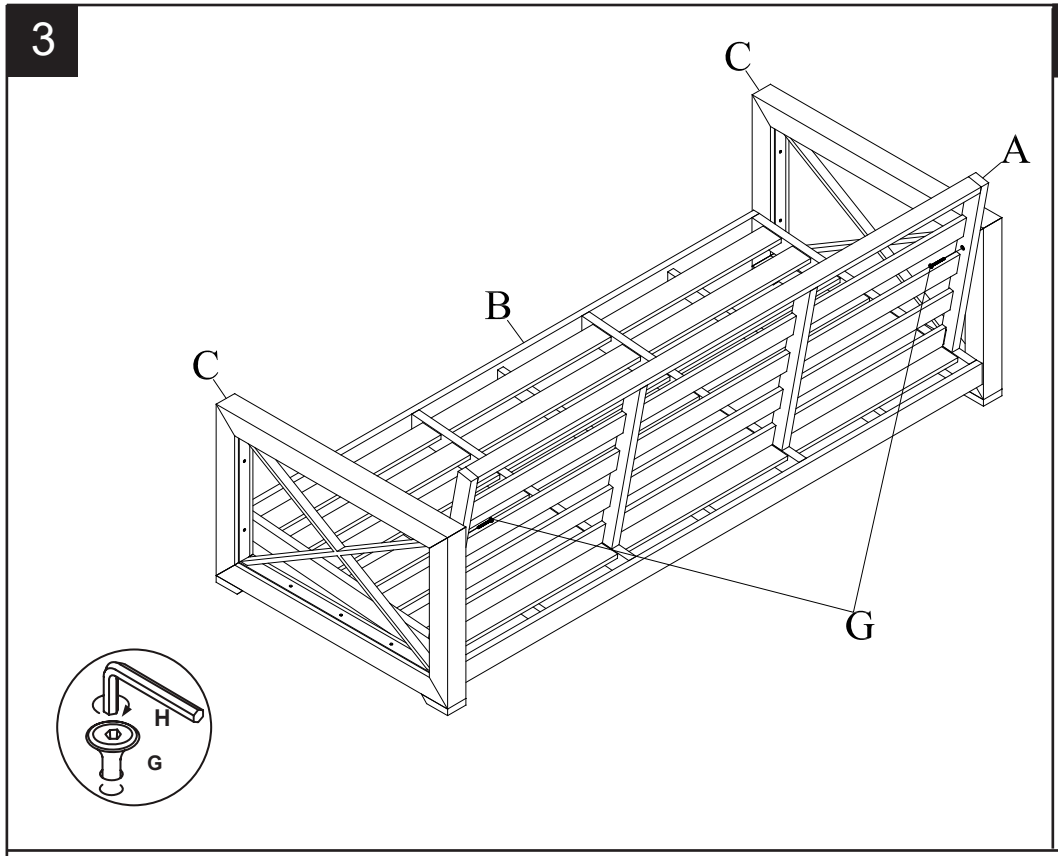

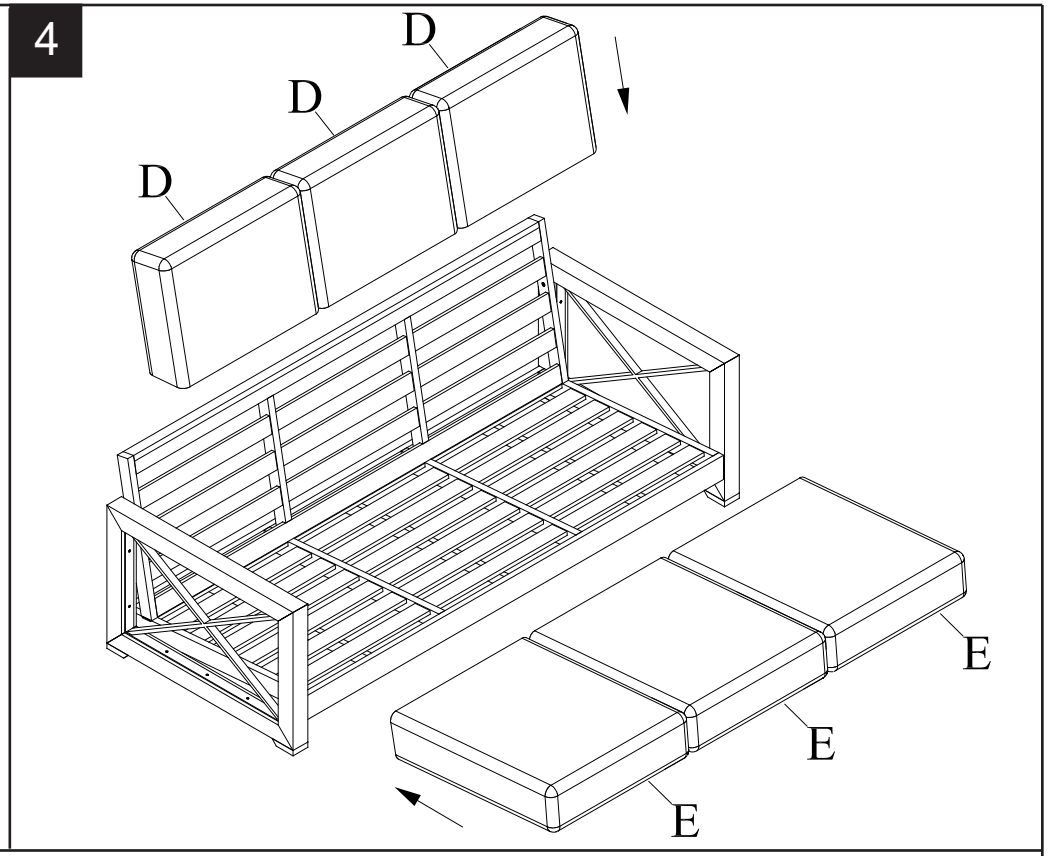

Step 3
Continue using both (G) to back frame (A) tighten with Allen Key(H).

Step 4
Put Back Cushion (D) and Seat Cushion (E) on the Chair.
The Chair is ready to be used.

PREPARATION

Before beginning assembly of product, make sure all parts are present. Compare parts with package contents list and hardware contents list.
If any part is missing or damaged, do not attempt to assemble the product.
Estimated Assembly Time: 10 minutes.
Tools Required for Assembly (included): Allen Key

5

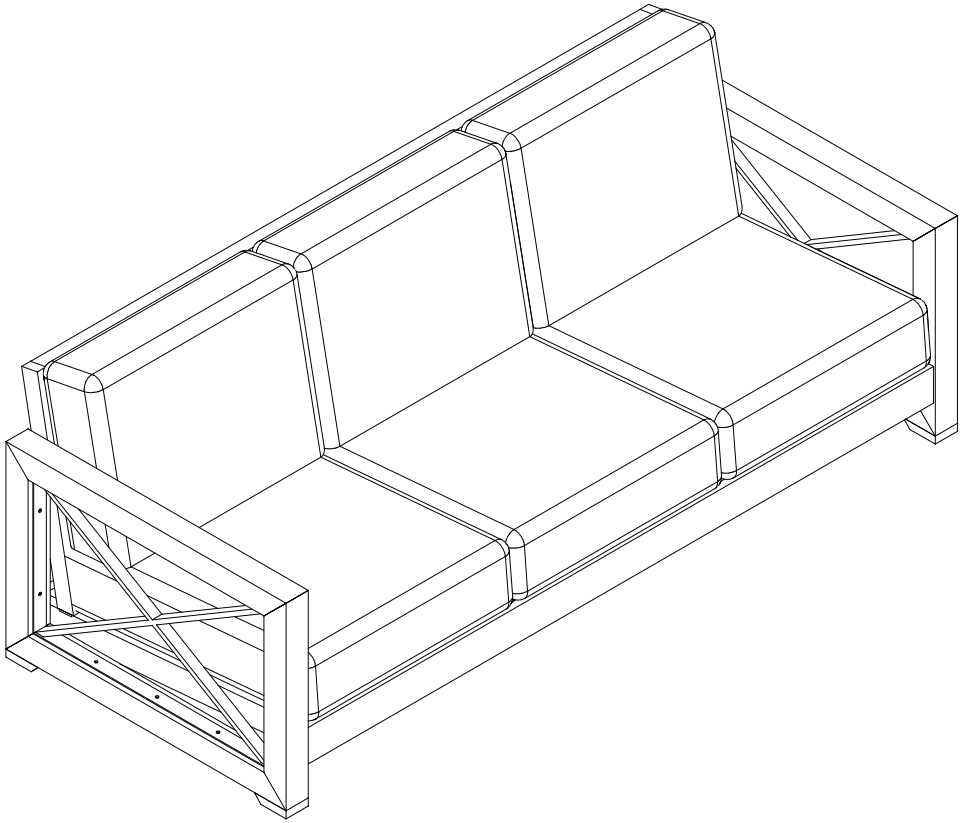

Step 5 Caution: This Chair can only be used on a flat, level surface