FEATURES

- Inset construction with UV coated plywood cabinet interior
- Full height doors with softclose Blum® 110° hinges
- Conversion Varnish finish
- 8" Tall metal base with built-in leg levelers and a
- 3/8" shadow gap between the vanity and the metal base
- Hardware size 8 13/16"
- Top and faucet sold separately
- Plumbing rough in area cut-out
- Made in the US

MATERIAL

- Solid wood and Rift Oak veneers.
- Wood is a living material, and its beauty is enhanced by natural variations in grain, color, and pattern.
- No two pieces of wood are exactly the same, and the color will change with age, temperature, and exposure to light.
- The nature of wood grain can cause variations in stain depth. Our expert craftsmen hand-apply the stain to blend these variations.

INSTALLATION

- Bath Vanity

TECHNICAL DRAWINGS

INCLUDED PRODUCTS

- Decorative Door Hardware
- Leg leveling hardware
- Door bumpers

CODES & STANDARDS

- EPA TSCA Title VI
- CARB P2

TECHNICAL INFORMATION

- All Product Dimensions are nominal
- Installation: Bath Vanity
- Number of drawers: 2

Vanderloc® reserves the right to make revisions without notice to product specifications. All product dimensions are nominal. For the most current specification sheet, visit www.vanderloc.com.

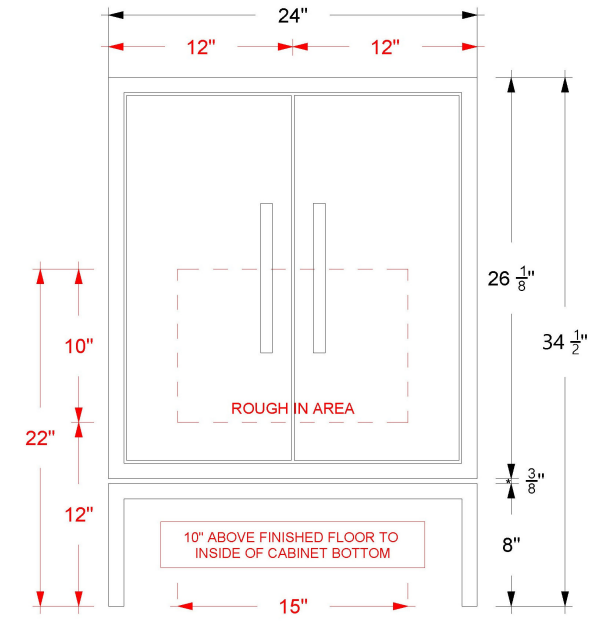

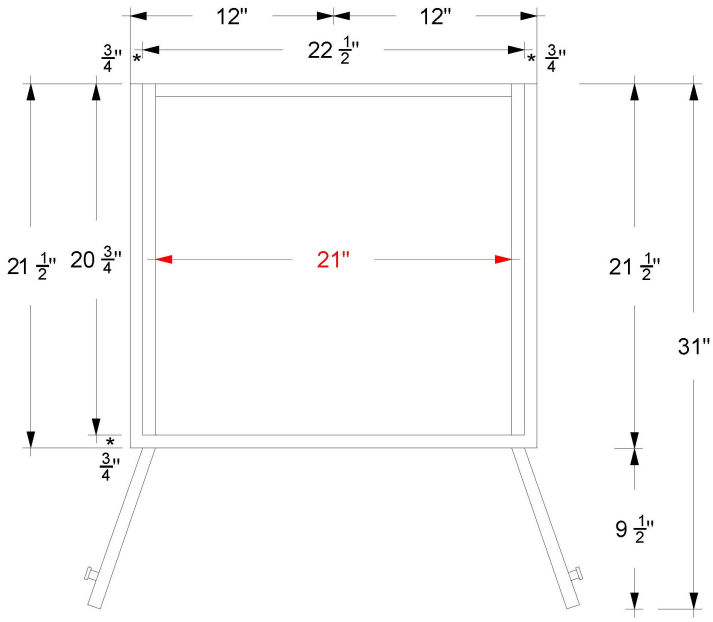

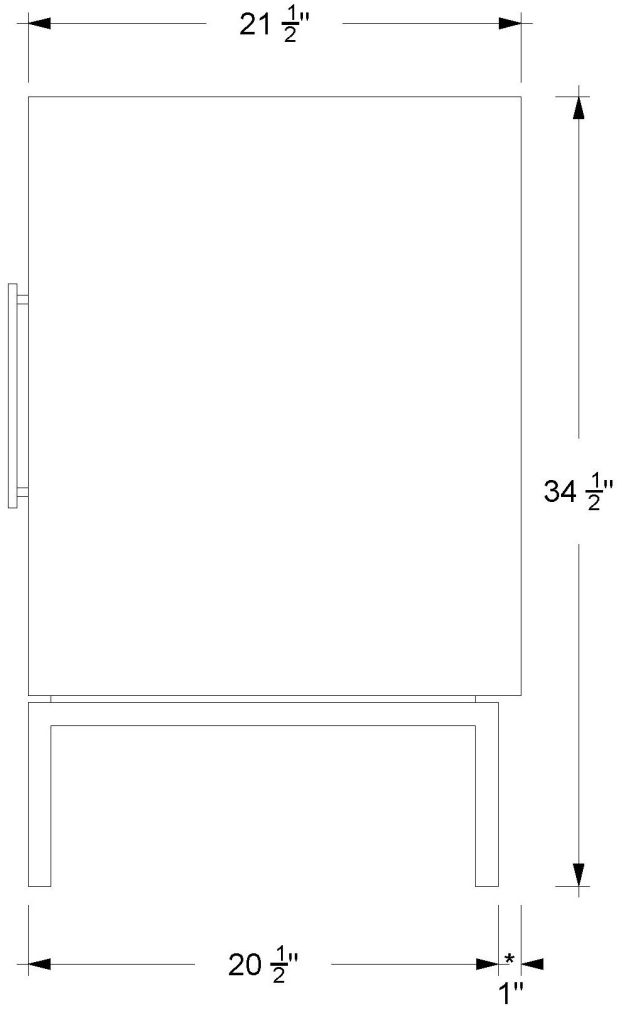

Vanderloc® reserves the right to make revisions without notice to product specifications. All product dimensions are nominal. For the most current specification sheet, visit www.vanderloc.com.