Sidetable

CTG060 | Door and Shelf

Assembly Instructions

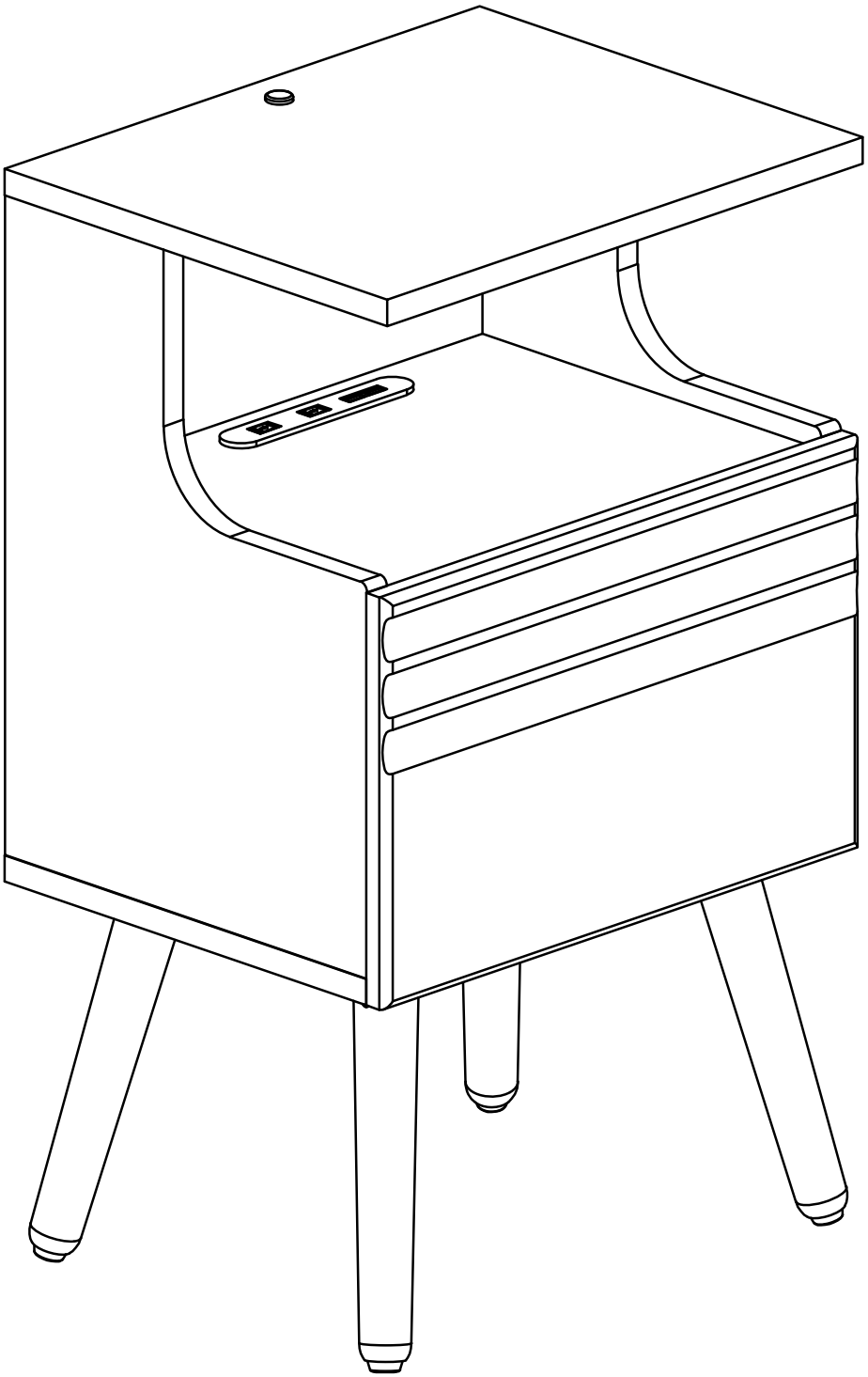

Assembly Diagram

CTG060 | Door and Shelf

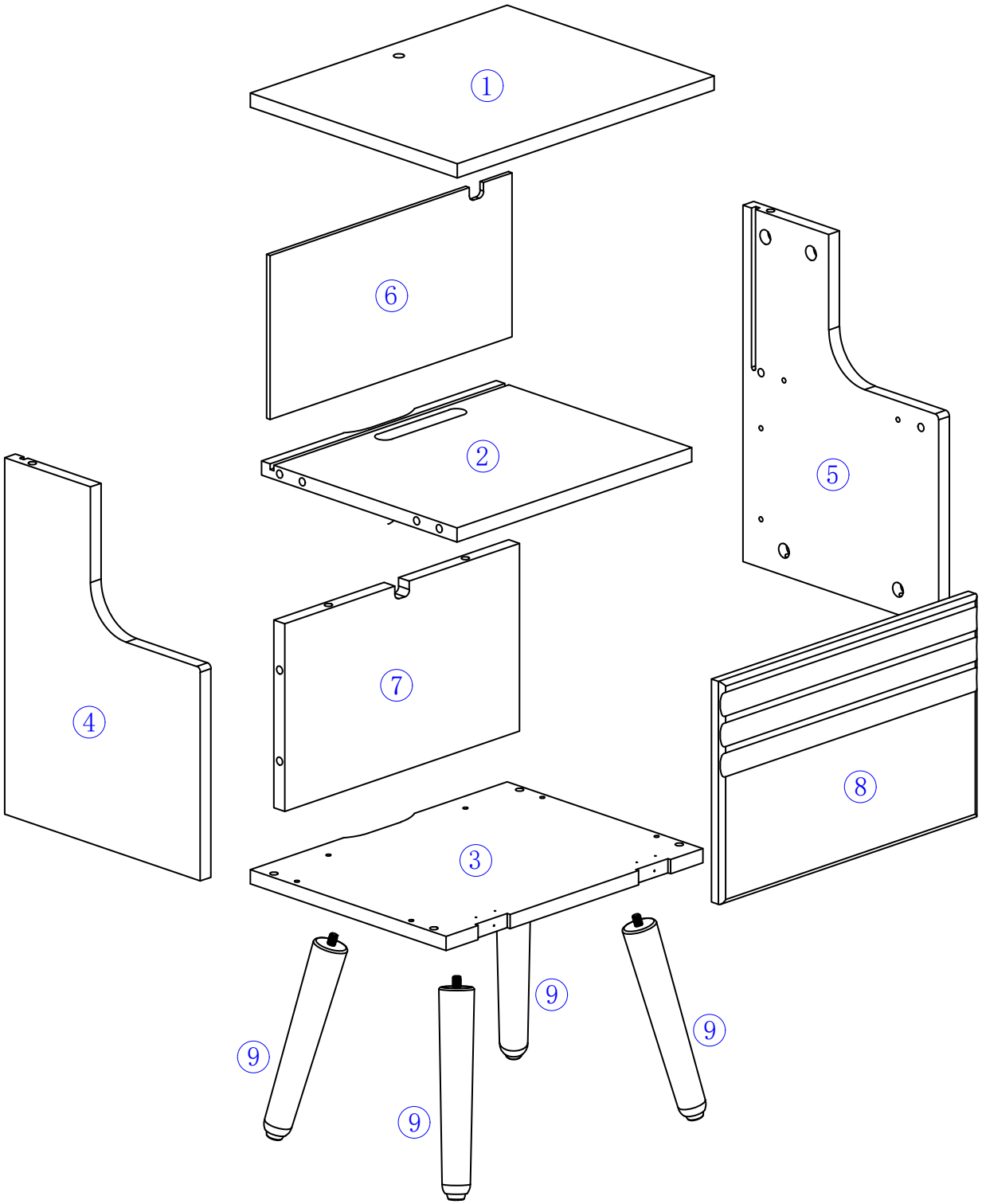

Parts List

CTG060 | Door and Shelf

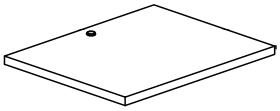

1 Top panel

Quantity: 1

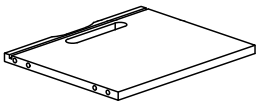

2 Fixed shelf

Quantity: 1

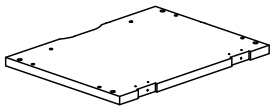

3 Base panel

Quantity: 1

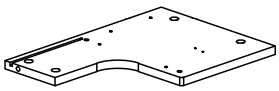

4 Left side panel

Quantity: 1

Parts List

CTG060 | Door and Shelf

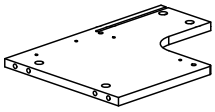

5 Right side panel

Quantity: 1

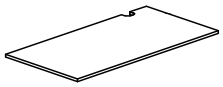

6 Upper back panel

Quantity: 1

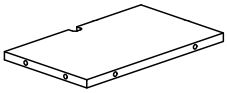

7 Lower back panel

Quantity: 1

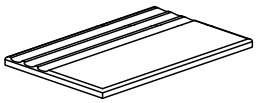

8 Door panel

Quantity: 1

Parts List

CTG060 | Door and Shelf



9 Leg

Quantity: 4

Hardware & Tools

CTG060 | Door and Shelf

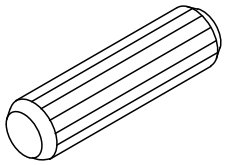

A Wood dowels

M8 × 30

Quantity: 8 + 1

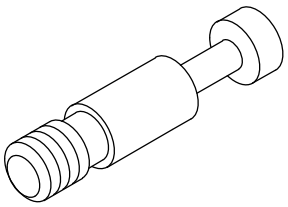

B Cam bolts

L=35MM

Quantity: 20 + 2

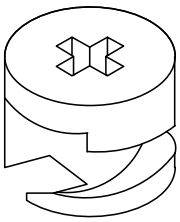

C Cam locks

Ø15MM

Quantity: 20 + 2

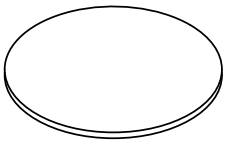

D Cover stickers

Ø20MM

Quantity: 20 + 2

Hardware & Tools

CTG060 | Door and Shelf

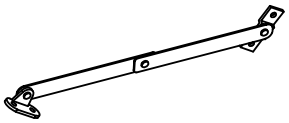

E Left-hand door stay

Quantity: 1

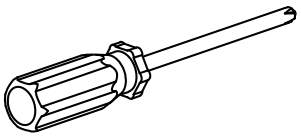

F Phillips screwdriver

Ø6 × 128MM

Quantity: 1

Reusable tool

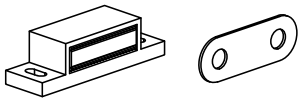

G Magnetic catch set

Quantity: 1 set

Catch and contact plate

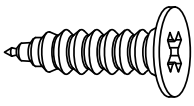

H Flat-head wood screws

Ø3.5 × 15MM

Quantity: 20 + 2

Hardware & Tools

CTG060 | Door and Shelf

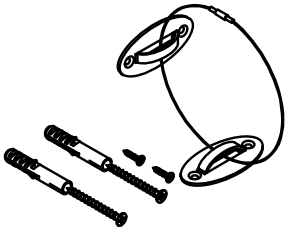

I Tip restraint kit

Quantity: 1 kit

Includes screws and wall plugs

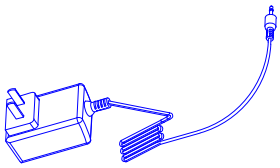

J Power adapter

Quantity: 1

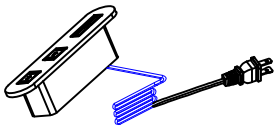

K Recessed socket

Quantity: 1

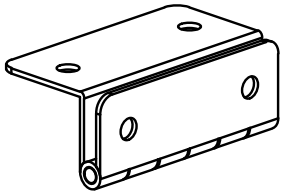

L Hinges

Quantity: 2

Safety Warnings

CTG060 | Door and Shelf

Place the unit on a level surface, or level it with the included hardware when applicable.

Do not sit or stand on the product. Do not allow children to climb, sit or stand on it.

For safety, the unit must be secured to the wall.

Do not use the unit without installing the tip restraint.

The unit can tip over and cause severe injury or death.

Do not exceed the recommended weight limits.

Distribute weight evenly on each level. Keep heavier loads at the bottom.

Before cutting, drilling or hammering into a wall or floor, check for electrical wiring, plumbing and gas lines. Cutting into them can cause serious injury.

Cam Lock Assembly

CTG060 | Door and Shelf

Generic illustration key: A = cam bolt; B = cam lock.
Model hardware: B = cam bolt; C = cam lock.

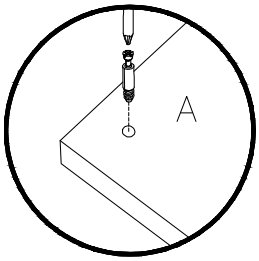

1. Screw the cam bolt into the panel.

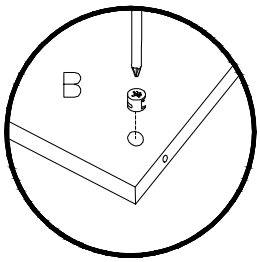

2. Insert the cam lock with its arrow pointing toward the panel edge.

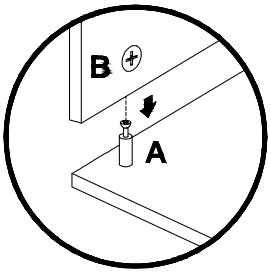

3. Align the cam bolt and cam lock. Insert fully into the cross-bored hole.

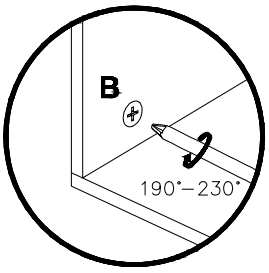

4. Turn the cam lock clockwise 190°–230° to lock the panels.

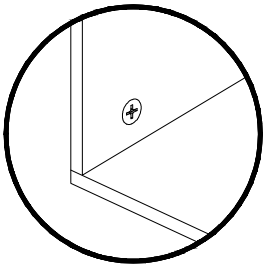

5. Check that the panels fit tightly and the connection is rigid.

Generic Fitting Reference

CTG060 | Door and Shelf

Follow the insertion depths shown for the connector types illustrated.

Illustration labels A and C are generic reference labels.

Use the model-specific parts and hardware lists for assembly.

For a wood dowel, insert it at least halfway.

If necessary, tap gently with a rubber mallet.

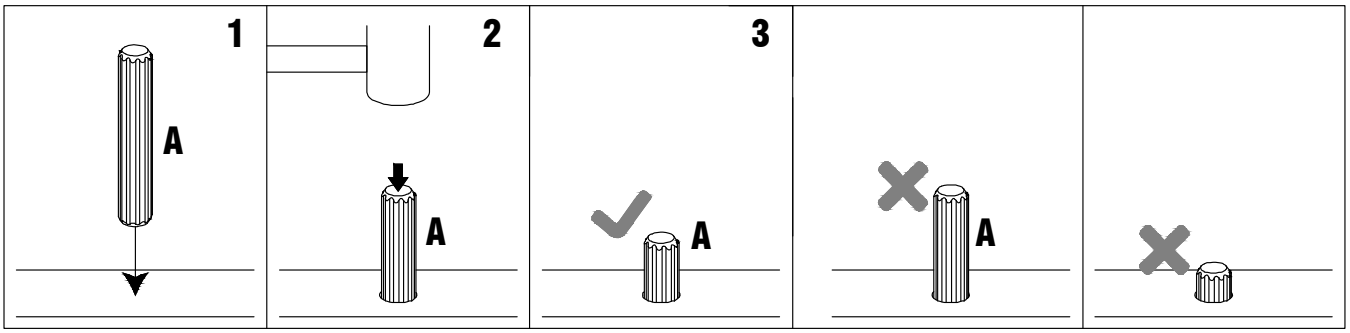

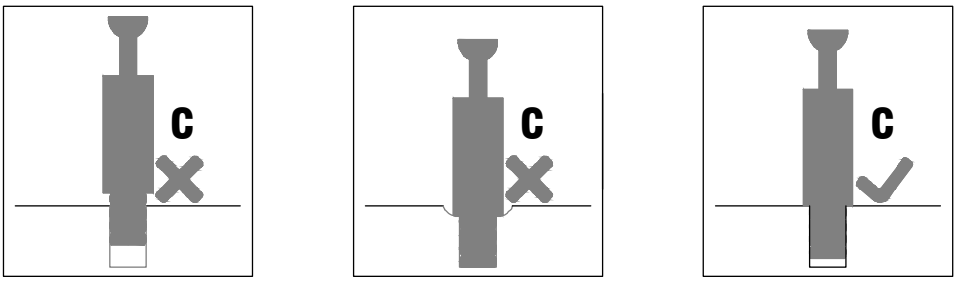

Before Assembly

CTG060 | Door and Shelf

Check all parts against the parts and hardware lists before assembly.

Use the correct screws to avoid splitting or damaging the panels.

Check the factory-fitted LED wiring and leg mounting plates shown.

Tool F is reused throughout assembly; leveling pads are preinstalled.

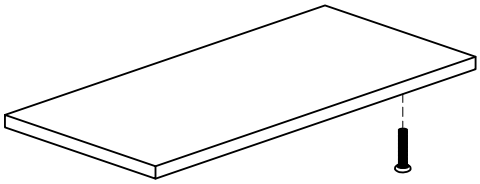

Example

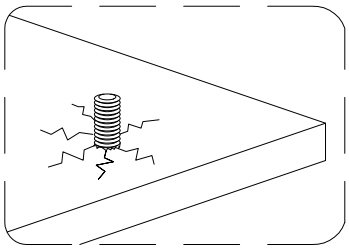

Incorrect: oversized screw

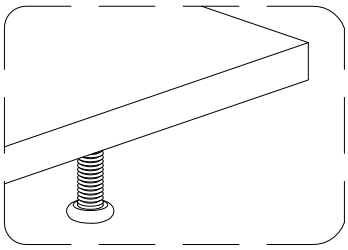

Correct: matching screw

Step 1

CTG060 | Door and Shelf

Install Cam Bolts B in Parts 1, 3, 4 and 5 using Tool F.

Hardware: B × 18 Tool: F (reuse)

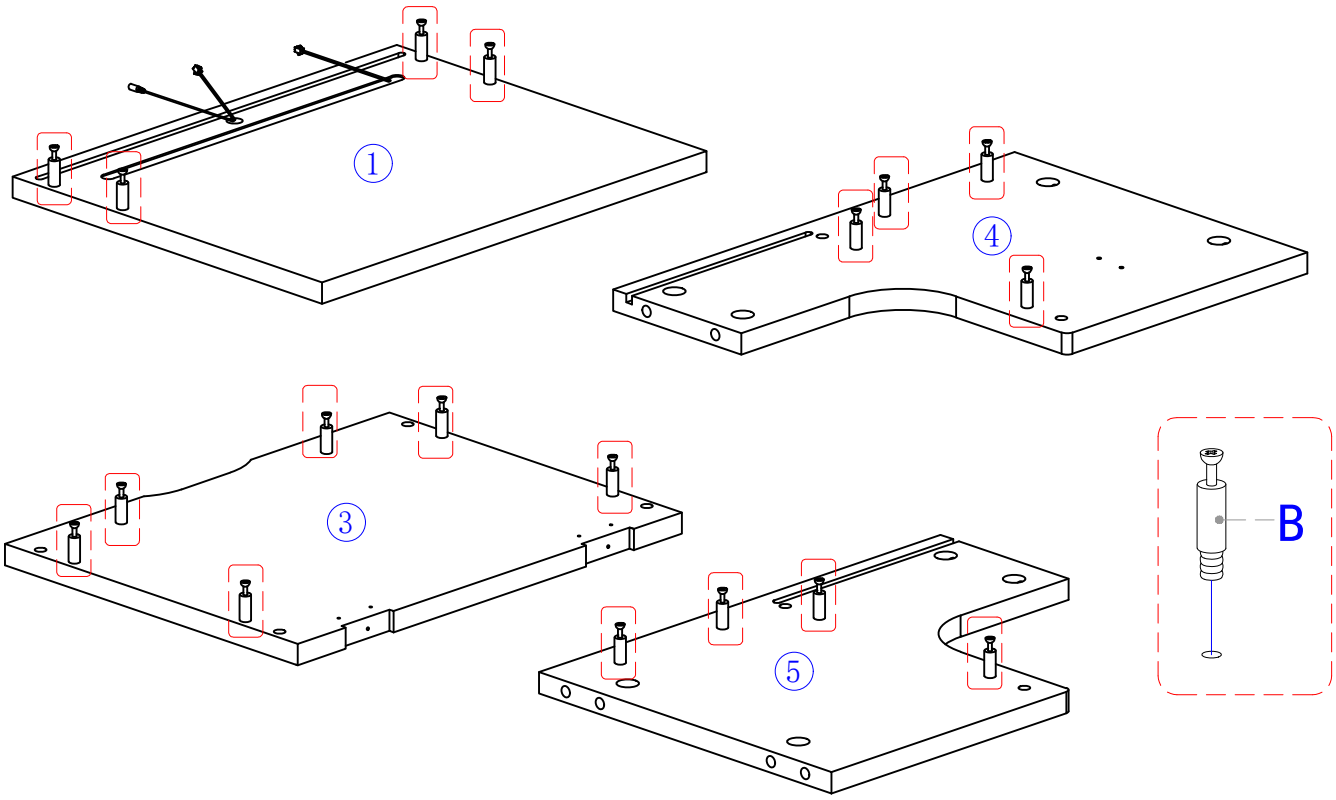

Step 2

CTG060 | Door and Shelf

Install Cam Bolts B, the magnetic catch from Set G and Socket K in Fixed Shelf 2, following the routing and fastening details shown.

Hardware: B × 2 G: catch H × 4 K × 1 Tool: F (reuse)

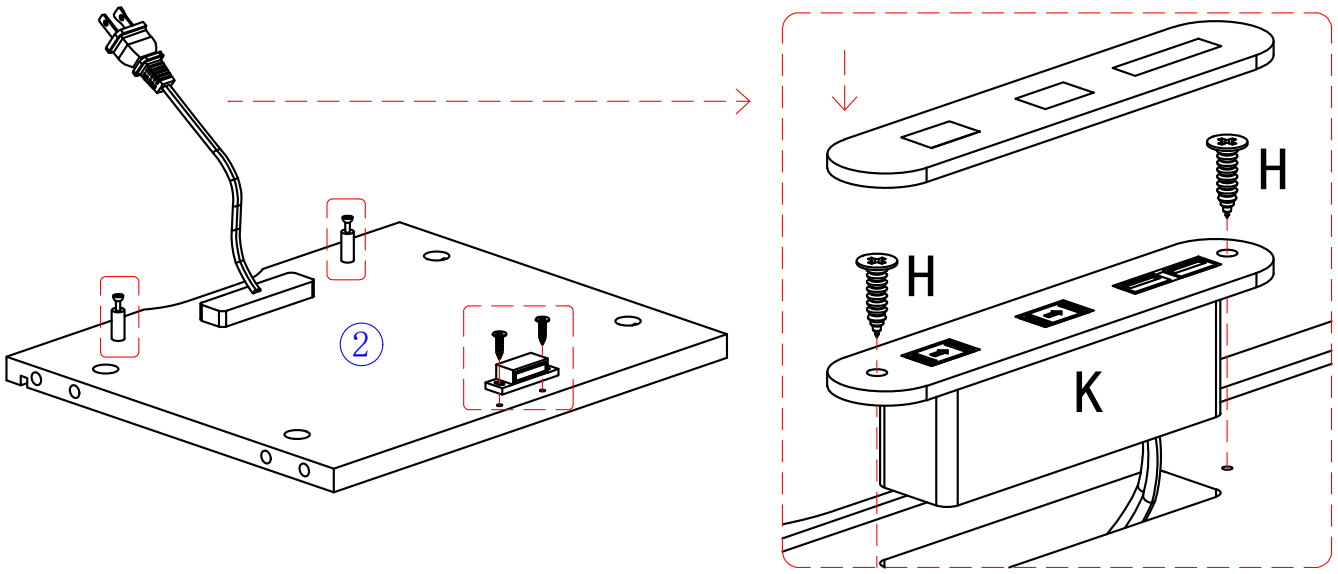

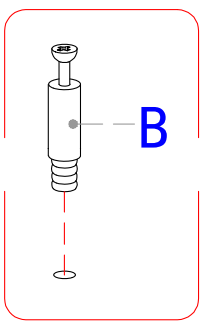

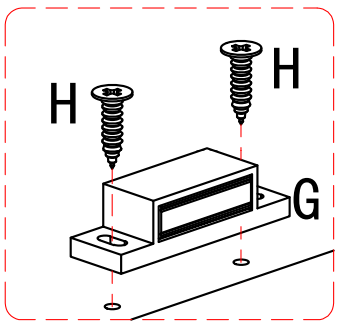

Step 3

CTG060 | Door and Shelf

Join Fixed Shelf 2 to Lower Back Panel 7 using Cam Locks C.
Cover the indicated holes with Stickers D.
Hardware: C × 2 D × 2 Tool: F (reuse)

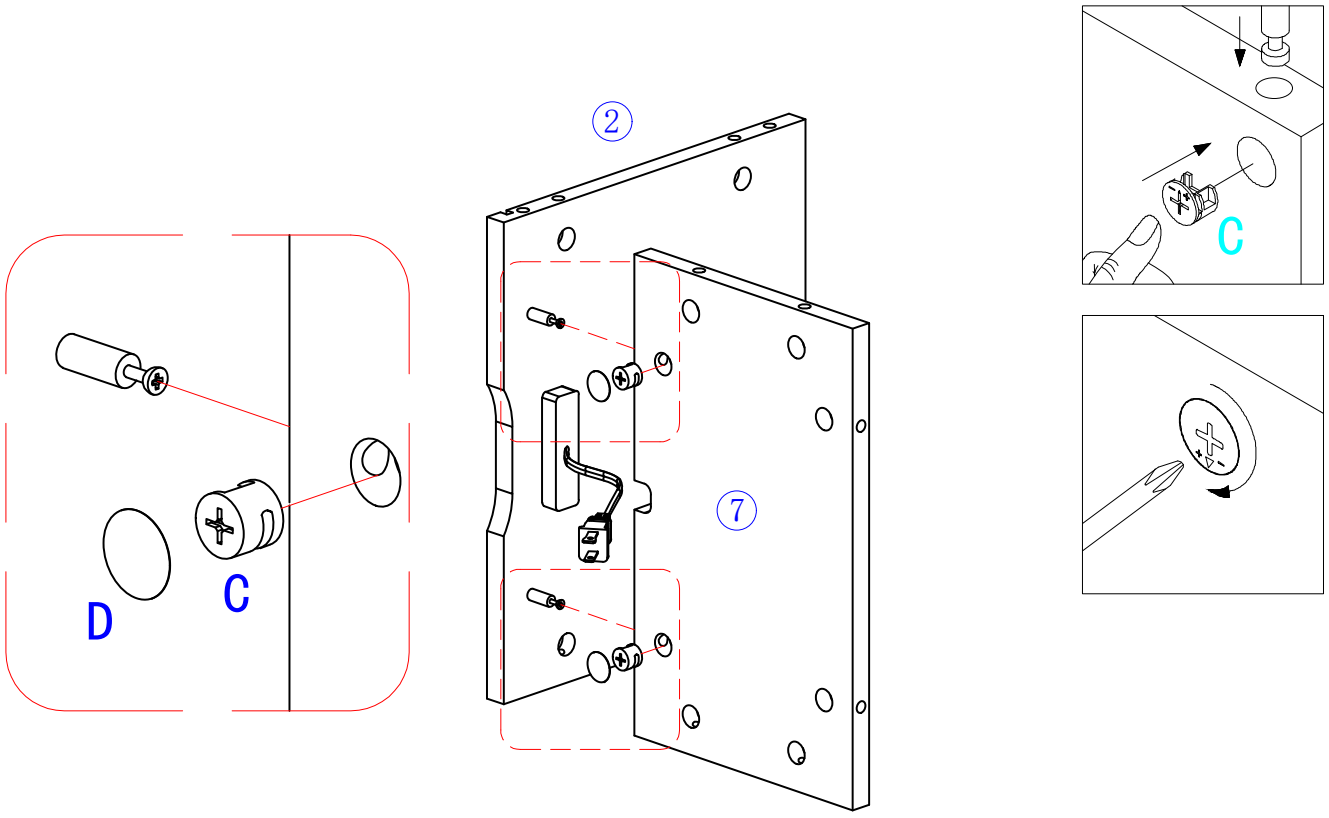

Step 4

CTG060 | Door and Shelf

Attach Right Side Panel 5 to the assembly from Step 3
using Wood Dowels A and Cam Locks C; apply Stickers D.
Hardware: A × 2 C × 4 D × 4 Tool: F (reuse)

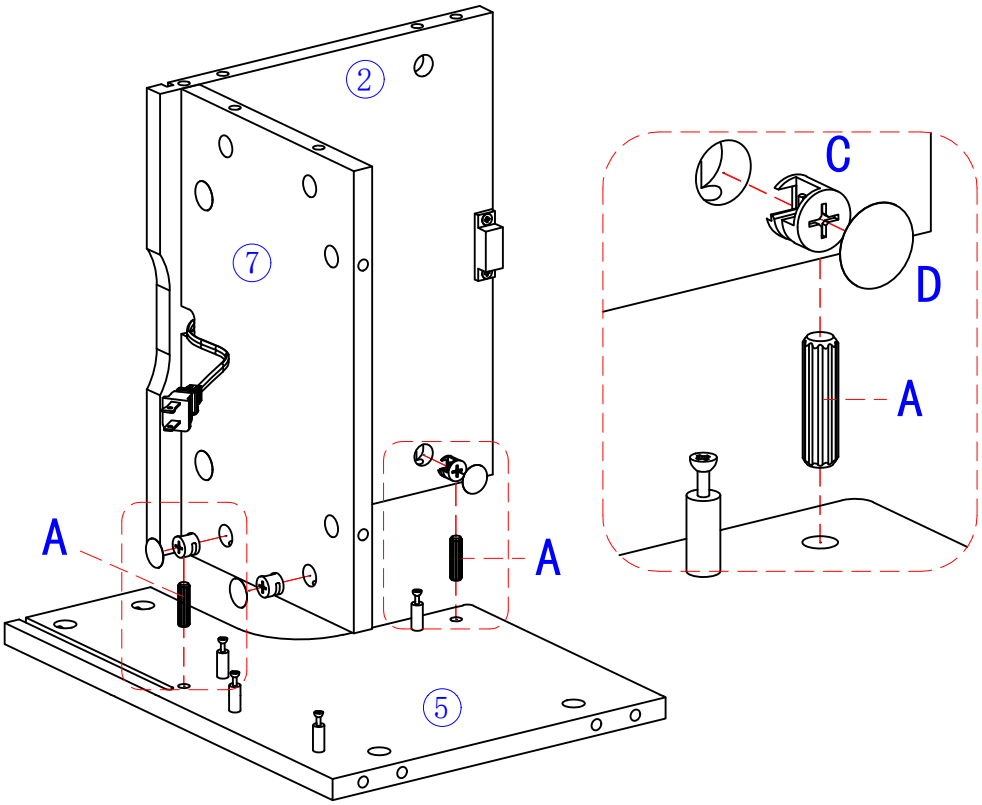

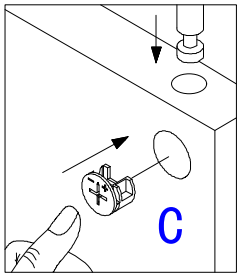

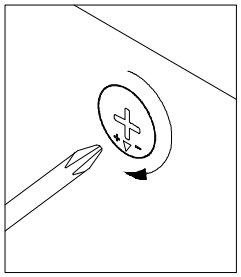

Step 5

CTG060 | Door and Shelf

Attach Left Side Panel 4 to the assembly from Step 4
using Wood Dowels A and Cam Locks C; apply Stickers D.
Hardware: A × 2 C × 4 D × 4 Tool: F (reuse)

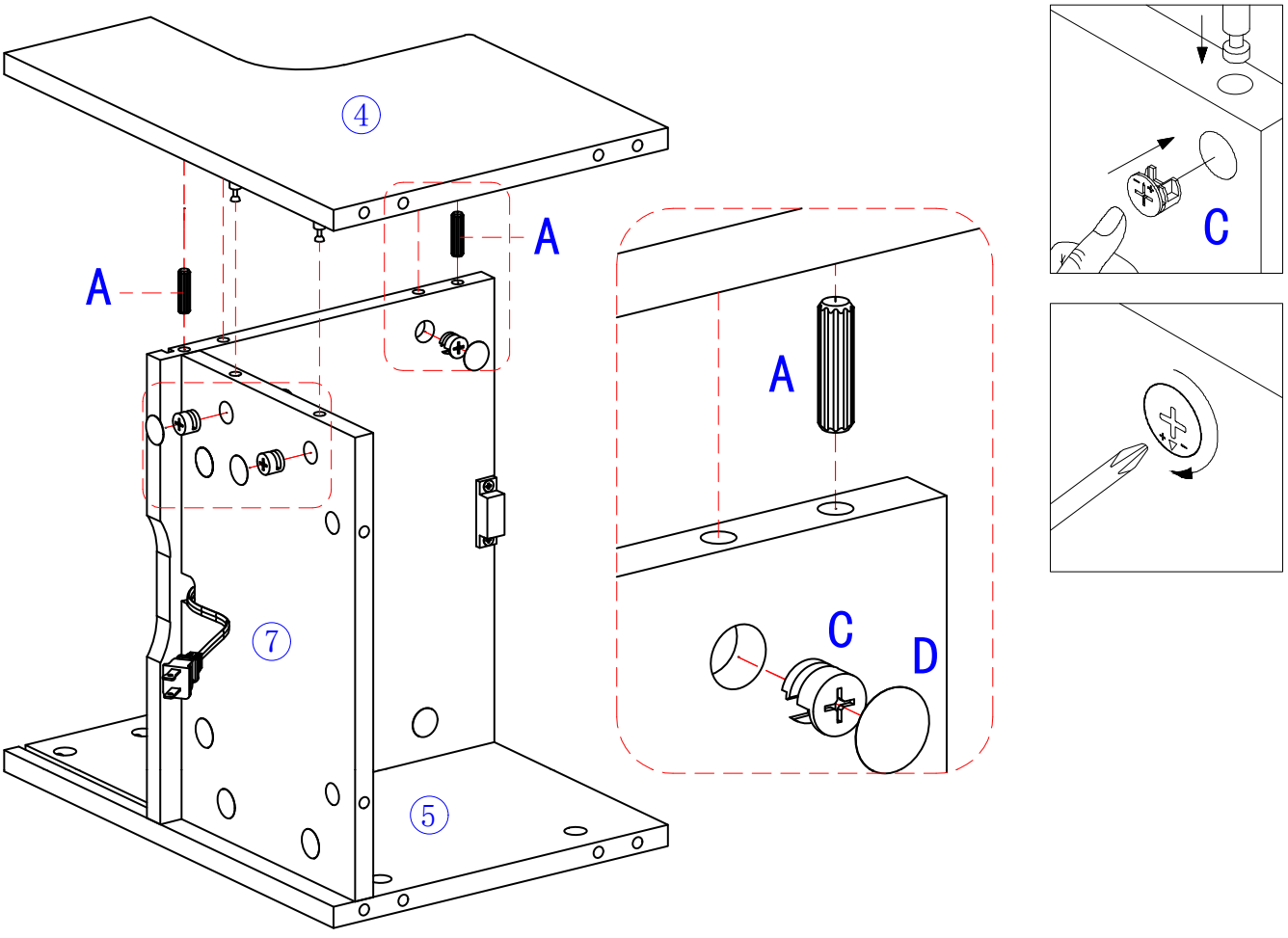

Step 6

CTG060 | Door and Shelf

Insert four Wood Dowels A into the indicated edge holes.

Hardware: A × 4

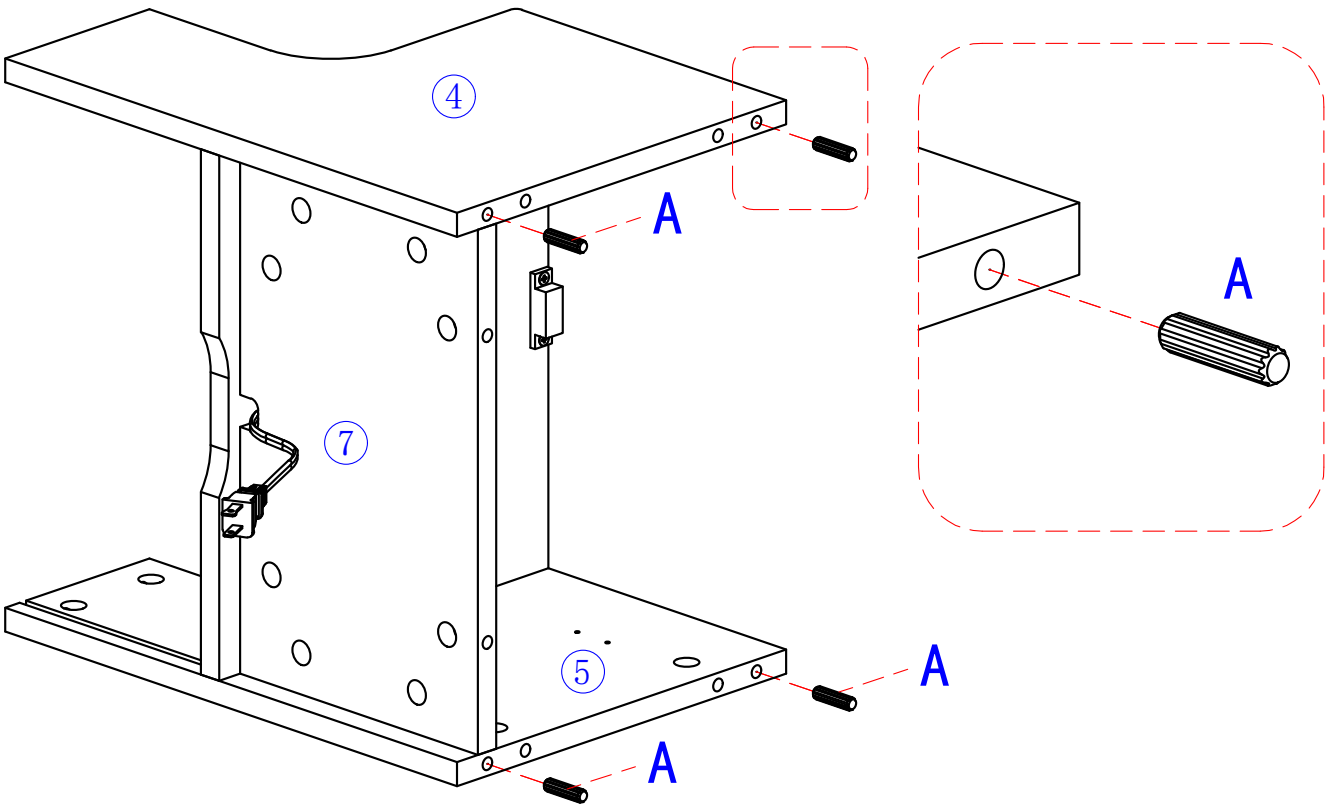

Step 7

CTG060 | Door and Shelf

Attach Base Panel 3 to the assembly from Step 6 using Cam Locks C.
Cover the indicated holes with Stickers D.
Hardware: C × 6 D × 6 Tool: F (reuse)

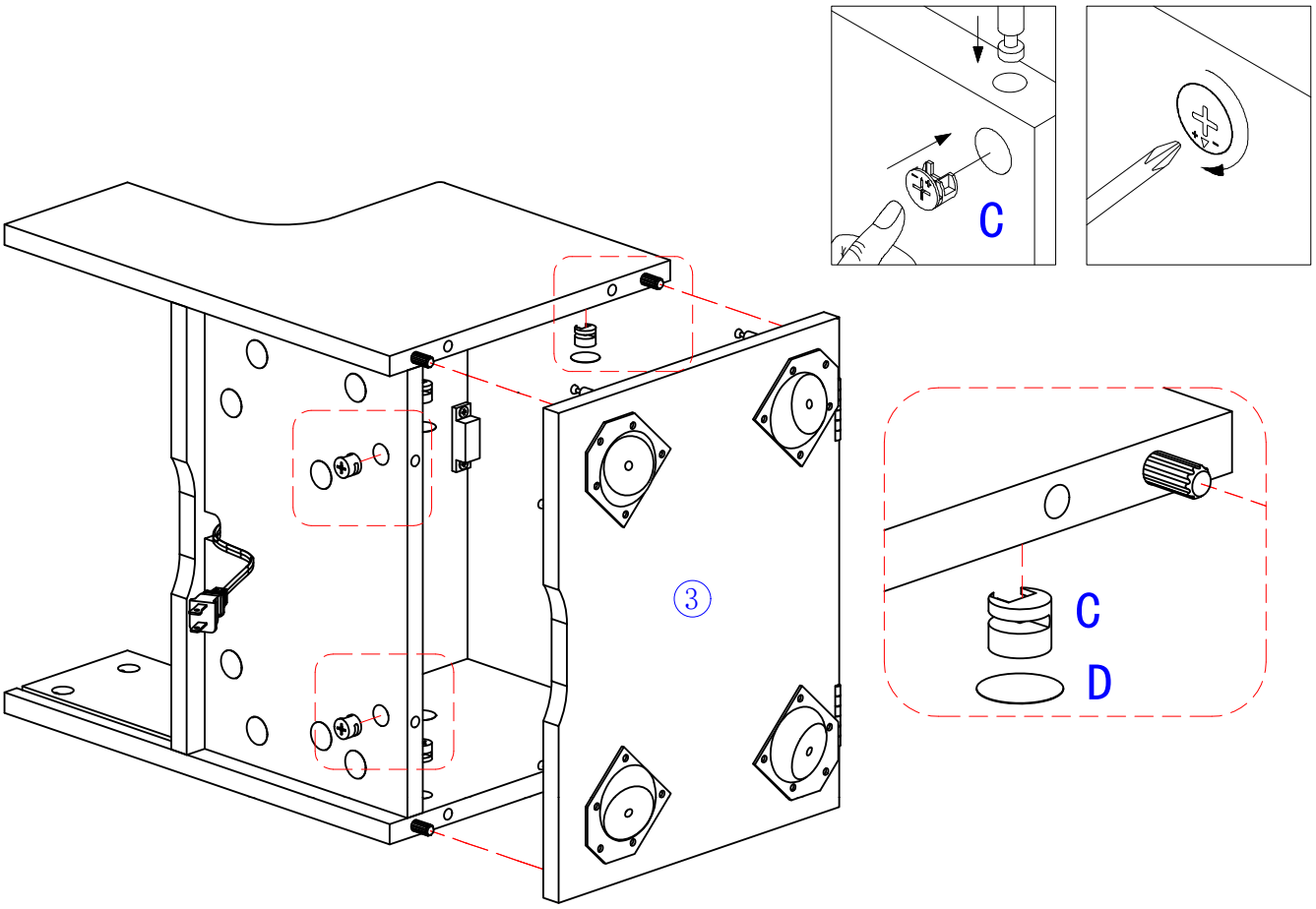

Step 8

CTG060 | Door and Shelf

Screw all four Legs 9 clockwise into the factory-fitted mounting plates on Base Panel 3, as shown.

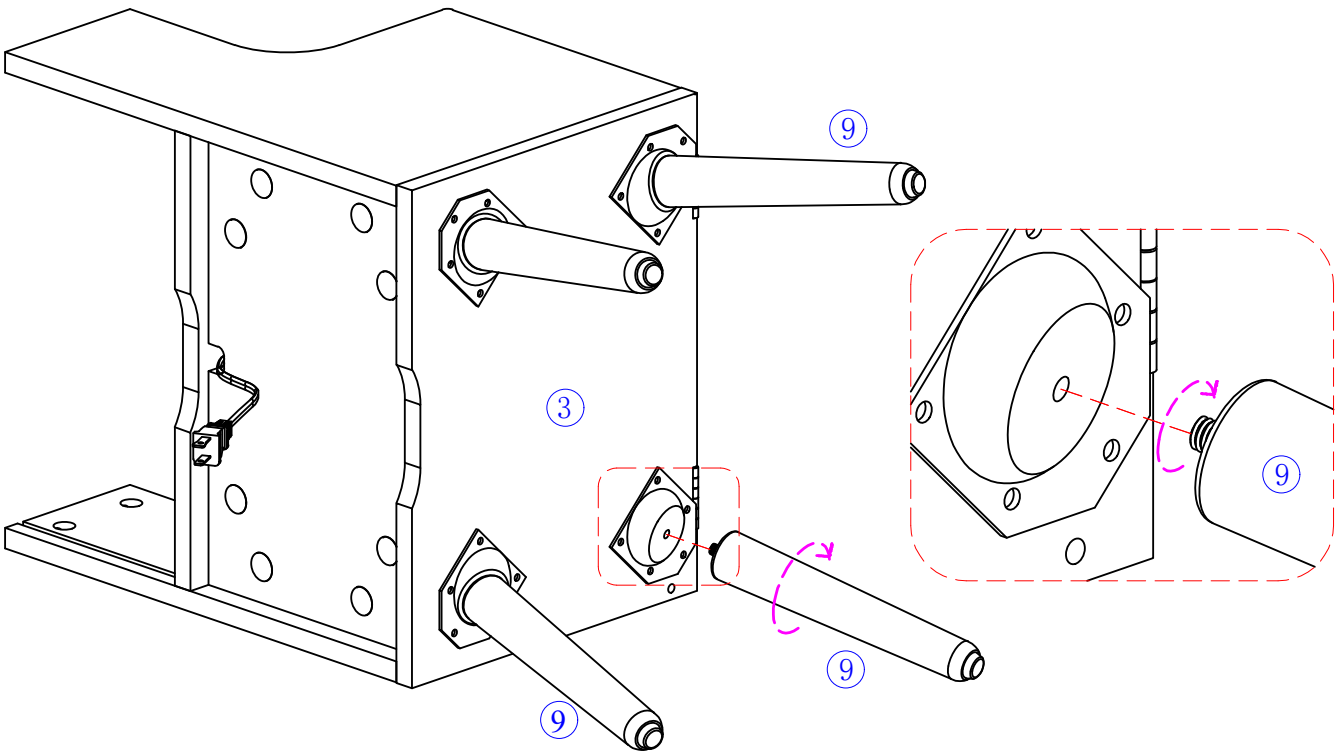

Step 9

CTG060 | Door and Shelf

Slide Upper Back Panel 6 into the grooves as shown.

Attach both Hinges L to Base Panel 3 using Screws H.

Hardware: L × 2 H × 6 Tool: F (reuse)

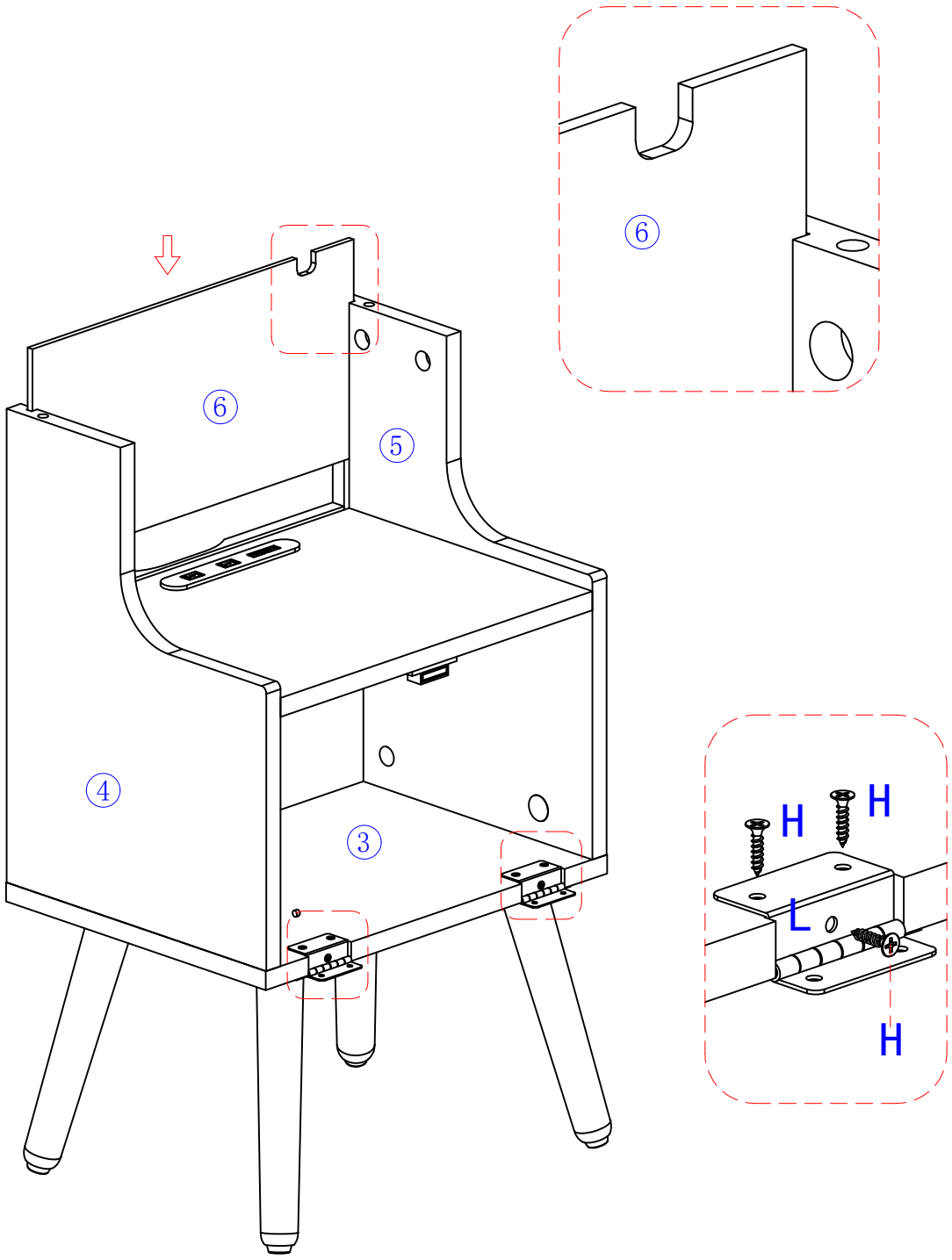

Step 10

CTG060 | Door and Shelf

Attach Top Panel 1 using Cam Locks C; apply Stickers D.
Route the wiring through the opening as shown.
Hardware: C × 4 D × 4 Tool: F (reuse)

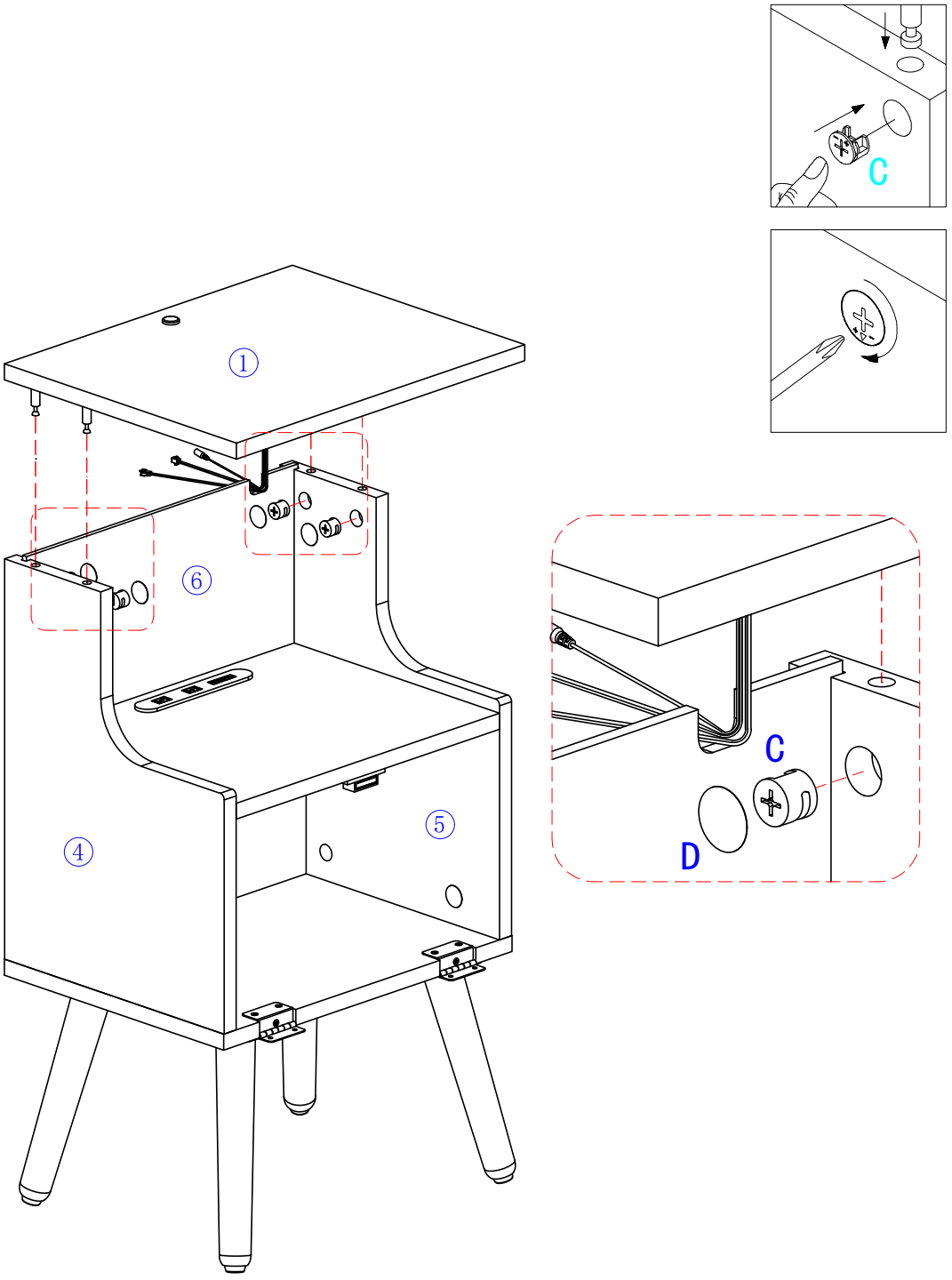

Step 11

CTG060 | Door and Shelf

Attach the cabinet end of Door Stay E to Left Panel 4 using Screws H.

Hardware: E × 1 H × 2 Tool: F (reuse)

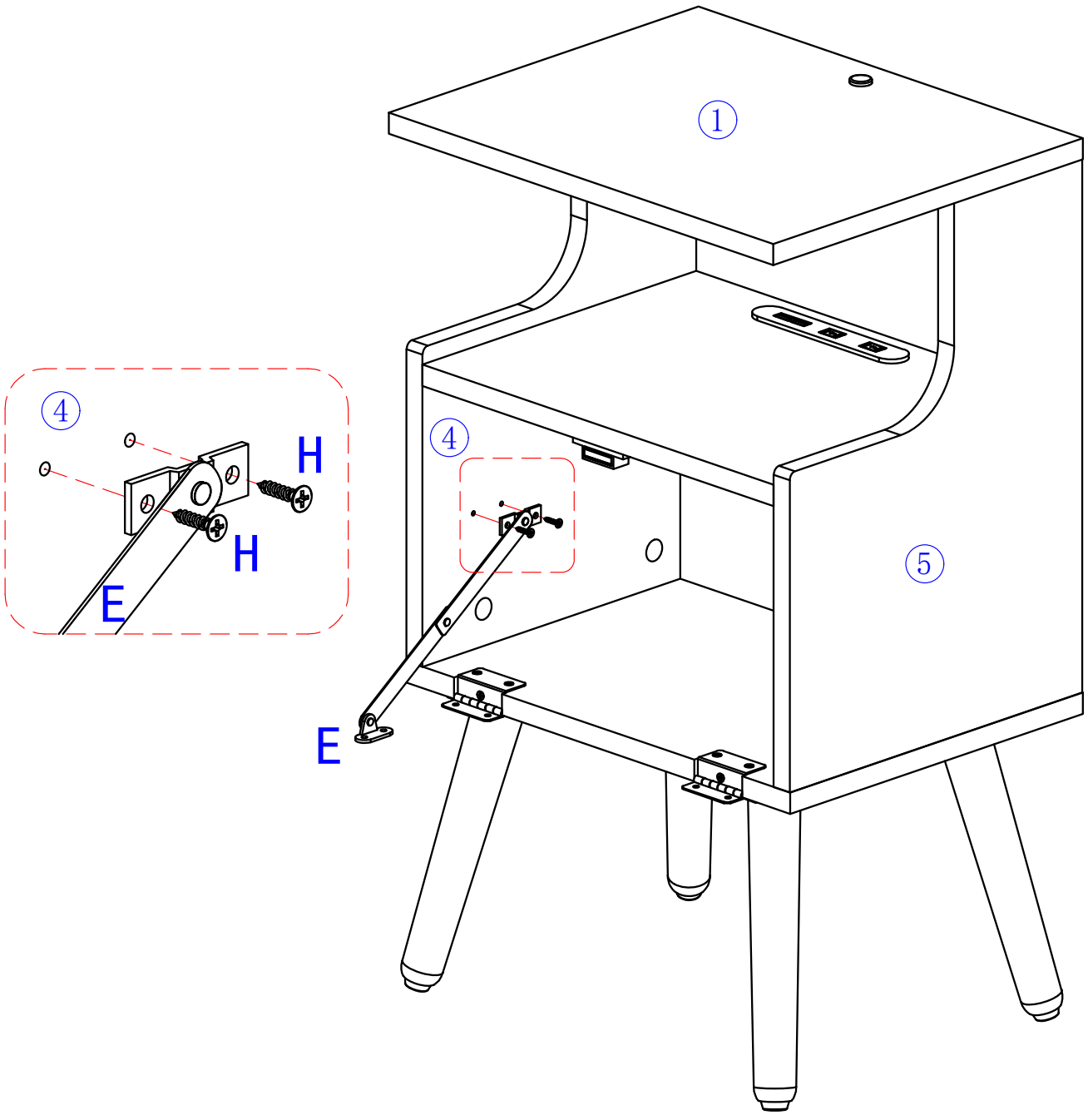

Step 12

CTG060 | Door and Shelf

Attach the contact plate from Set G to Door Panel 8 using Screws H.
Fasten Door 8 to both Hinges L and the free end of Door Stay E.
Hardware for this step: H × 8 G: contact plate Tool: F (reuse)

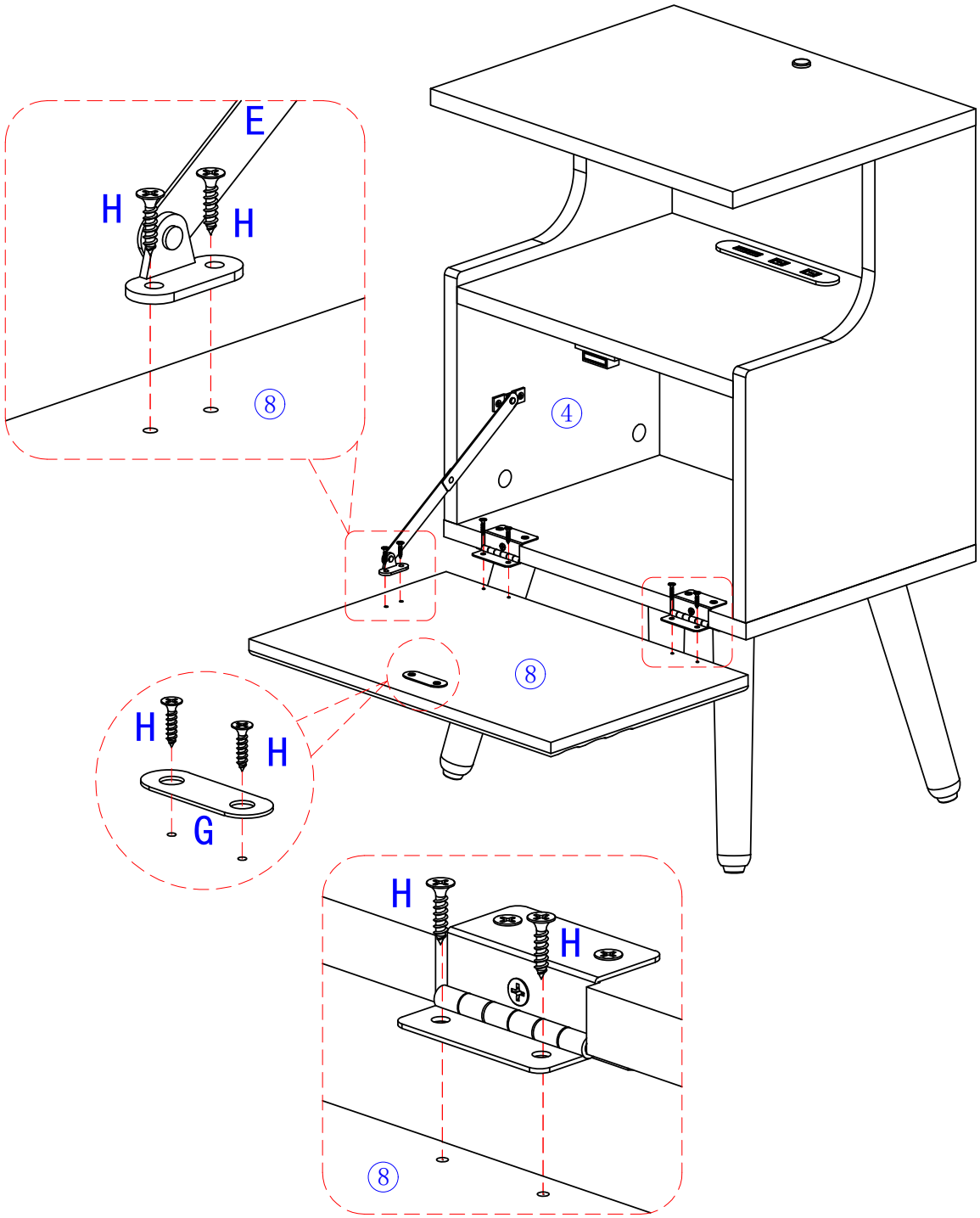

Step 13

CTG060 | Door and Shelf

Connect the LED strip terminals to the control switch terminals as shown in the first connector detail. Connect the control switch to Power Adapter J as shown in the second detail.

Hardware: J × 1 Leave the mains plugs disconnected until Step 14.

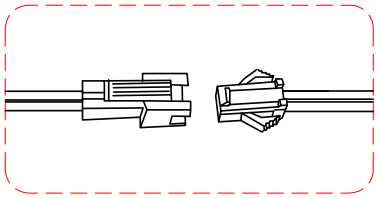

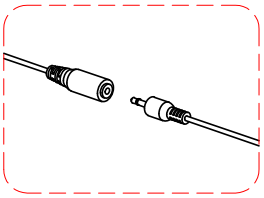

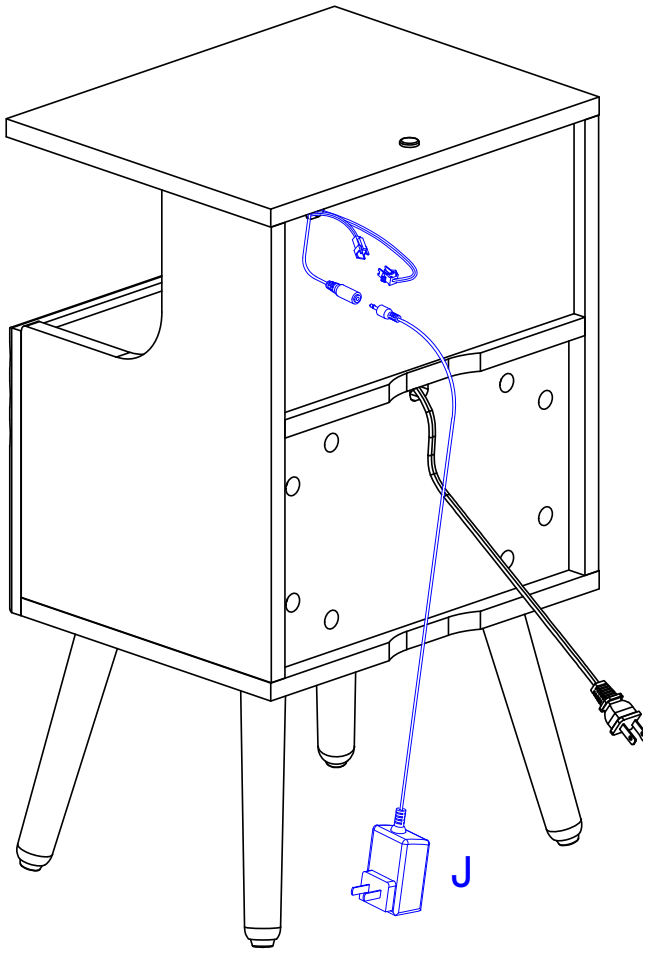

Step 14

CTG060 | Door and Shelf

Secure the unit to the wall using Tip Restraint Kit I.

Adjust the preinstalled leveling pads until the unit is level.

Connect the power supply only after all components are installed.

Hardware: I × 1 kit

