BRAND-MAN GRILLS
MAKE YOUR MARK

OWNER'S MANUAL

3 Burner Gas Grill

Model: G3BN901A

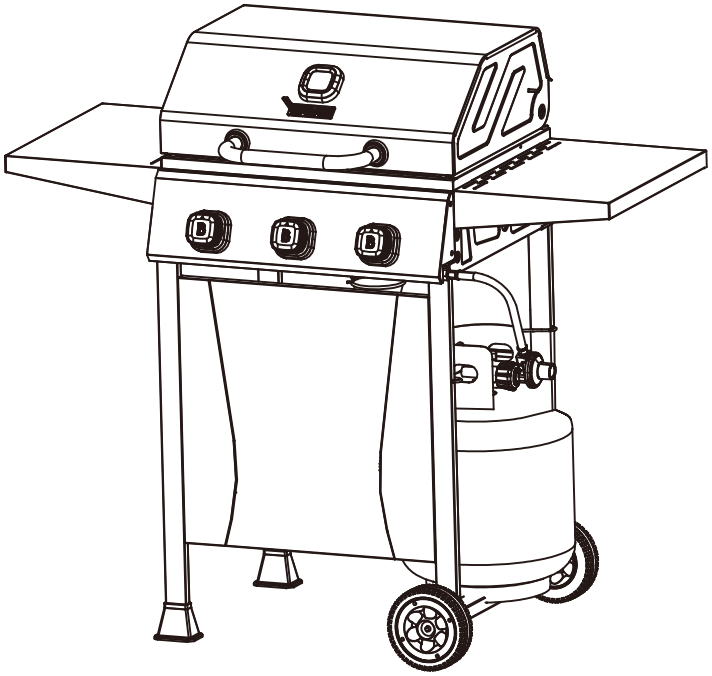

Important: Keep this Owner's Manual for convenient reference and for part replacement.

Read this Owner's manual carefully and be sure your gas grill is properly assembled, installed and maintained. Failure to follow these instructions could result in serious injury and/or property damage.

Please make sure the cylinder valve connection device shall properly and safely connected with the connection device attached to the inlet of the pressure regulator.

For Outdoor Use Only

Captivate Brands USA, Inc.
25541 Arctic Ocean Drive,
Lake Forest, CA.92630

If you have any questions or problems, you can contact our customer service at 1-855-200-8445 ext 102 or help@supportandspare.com from 9:00 AM - 5:00 PM Monday to Friday. (Pacific). All emails and voice-mail calls will be answered within 24 hours.

Important Safeguards

⚠ **DANGER: Failure to follow the dangers, warnings and cautions in this manual may result in serious bodily injury or death, or in a fi e or an explosion causing damage to property**

⚠ **WARNINGS:**

⚠ **This Barbecue is for outdoor use only, and should not be used in a building, garage or any other enclosed area.**

⚠ **Do Not operate, light or use this appliance within ten feet (3.05m) of walls, structure or buildings.**

⚠ **For residential use only. This Barbecue is NOT for commercial use.**

⚠ **This BBQ is not intended for and should never be used as a heater. TOXIC fumes can accumulate and cause asphyxiation.**

⚠ **This Barbecue is safety certified or use in any other location. Modifi cation will result in a safety hazard and will void your warranty.**

⚠ **This Barbecue is for use with liquid propane (LP) gas only. The conversion to or attempted use of natural gas in this LP gas Barbecue is dangerous, may cause bodily harm and will void your warranty.**

⚠ **LP gas characteristics:**

a. **LP gas is flammable and haza dous if handled improperly. Be come aware of the characteristics before using any LP gas product.**

b. **LP gas is explosive under pressure, heavier than air, and settles/ pools in low areas.**

c. **LP gas in its natural state has no odor. For your safety, an odorant is added that smells like rotten cabbage.**

d. **Contact with LP gas can cause freeze burns to skin.**

⚠ **Apartment dwellers: Check with management to learn the requirments and fi e codes for using a LP gas Barbecue in your apartment complex.**

⚠ **LP gas cylinder needed to operate. Only cylinders marked "propane" may be used.**

⚠ **The LP gas cylinder must be constructed and marked in accordance with the Specifi ation for LP-gas Cylinders of the U.S. Department of Transportation (D.O.T.) or the National Standard of Canada, CAN/ CSA-B339, Cylinders, Spheres and Tubes for the Transportation of Dangerous Goods; and Commission.**

⚠ **LP gas cylinder must be arranged for vapor withdrawal.**

⚠ **The LP gas cylinder must have a listed overfilling p evention device (OPD).**

Only use LP gas cylinders equipped with a cylinder connection device compatible with the connection for outdoor cooking appliances.

⚠ **The LP gas cylinder must have a cylinder collar to protect the cylinder valve.**

⚠ **Never use an LP gas cylinder with a damaged body, valve, collar or footing.**

⚠ **Dented or rusted LP gas cylinder may be hazardous and should be checked by your LP gas supplier prior to use.**

The LP gas cylinder should not be dropped or handled roughly.

⚠ **LP gas cylinders must be stored outdoors out of reach of children and must not be stored in a buiding, garage or any other enclosed area. Your cylinder must never be stored where temperatures can reach over 125F.**

⚠ **Do NOT insert any tool or foreign object into the valve outlet or safety relief valve. You may damage the valve and cause a leak. Leaking propane may result in an explosion, fi e, severe personal injury or death.**

⚠ **Do NOT block holes in sides or back of Barbecue.**

⚠ **Never keep an LP gas cylinder in a hot car or trunk. Heat will cause the gas pressure to increase, which may open the relief valv and allow gas to escape.**

⚠ **Place dust cap on cylinder valve outlet whenever the cylinder is not in use. Only install the type of dust cap on the cylinder valve outlet that is provided with the cylinder valve. Other types of caps or plugs may result in leakage of propane.**

⚠ **If Barbecue is not in use, the gas must be turned off t the supply cylinder and disconnected.**

⚠ **Do NOT store a spare LP gas cylinder under or near this appliance. If not followed, a fi e causing death or serious injurymay occur.**

⚠ **Never fill the ylinder beyond 80 percent full. If not followed, a fi e causing death or serious injurymay occur.**

⚠ **Keep the fuel supply hose away from any heated surfaces.**

⚠ **A fi e causing serious injury or damage to property may occur if the above is not followed exactly.**

⚠ **Never attempt to attach this Barbecue to the self-contained LP gas system of a camper trailer, motor home or house.**

⚠ **Never use charcoal, lighter flui , lava rocks, gasoline, kerosene or alcohol with this product.**

⚠ **Your Barbecue has been checked at all factory connections for leaks. Re-check all connections as described in the "Operating Instructions" section, as shipping can loosen connections.**

⚠ **Check for leaks even if your unit was assembled for you by someone else.**

⚠ **Do NOT operate if a gas leak is present. Gas Leaks may cause a fi e or explosion.**

⚠ **You must follow all instructions in the "Checking for Leaks" section before operating. To prevent fi e or explosion hazard when testing for a leak:**

a. **Always perform a leak test before lighting the BBQ and each time the cylinder is connected for use.**

b. **No smoking. Do NOT use or permit sources of ignition in the area while conducting a leak test.**

c. **Conduct the leak test outdoors in a well-ventilated area.**

d. **Do NOT use matches, lighters, or a flame o check for leaks.**

e. **The use of alcohol, prescription or non-prescription drugs may impair the consumer's ability to properly assemble or safely operate the appliace.**

f. **Strong odors, colds, sinus congestion, etc. may prevent the detection of propane. Use caution and common sense when testing for leaks.**

g. **Do NOT use Barbecue until any and all leaks are corrected. If you are unable to stop a leak, disconnect the LP gas supply. Call a gas appliance serviceman or your local LP gas supplier.**

⚠ **This Barbecue is designed to operate at an inlet pressure of 11 inches water column.**

⚠ **Do NOT store or use gasoline or other flammable liquids or apors within 25 feet (7.62 m) of this appliance.**

⚠ **Do NOT use in an explosive atmosphere. Keep Barbecue area clear and free from combustible materials, gasoline and other flammable apors and liquids.**

⚠ **Minimum clearance from sides and back of unit to combustible construction is 30 inches (76.2 cm). Do NOT use this appliance under any type of overhang or roof.**

⚠ **It is essential to keep the Barbecue's valve compartment, burners and circulating air passages clean.**

⚠ **Inspect Barbecue before each use.**

⚠ **Do NOT alter Barbecue in any manner. Any alteration will void your warranty.**

⚠ **Do NOT use the Barbecue unless it is COMPLETELY assembled and all parts are securely fastened and tightened.**

⚠ **Do NOT build this model of Barbecue in any built-in or slide-in construction. Ignoring this warning could cause a fi e or an explosion that can damage property and cause serious bodily injury or death.**

⚠ **This Barbecue should be thoroughly cleaned nd inspected on a regular basis.**

⚠ **Clean and inspect the hose before each use of the appliance. If there is evidence of abrasion, wear, cuts or leaks, the hose must be replaced prior to operation.**

⚠ **Use only the regulator and hose assembly provided. Use only the replacement regulator and hose assembly specified by Brand-Man Grills/ Captivate Brands USA**

⚠ **Use only Brand-Man Grills/Captivate Brands USA factory authorized parts. The use of any part that is not factory authorized can be dangerous and will void your warranty.**

⚠ **Do NOT operate this appliance without reading "Operating Instructions" in this manual.**

⚠ **Do NOT attempt to disconnect the gas regulator from the cylinder or any gas fitting while the barbecue is in use.**

⚠ **Always place your Barbecue on a hard, non-combustible, level surface. An asphalt or blacktop surface may not be acceptable for this purpose.**

⚠ **Move gas hoses as far away as possible from hot surfaces and dripping hot grease.**

- Do NOT touch metal parts of Barbecue until they have completely cooled to avoid burns, unless you are wearing protective gear (pot holders, gloves, BBQ mittens, etc.)
- Do NOT install or use in or on boats or recreational vechicles. When
- cooking, fire extinguishing materials should be readily acces-sible. In the event of an oil/grease fire, do NOT attempt to extinguish with water. Use type BC dry chemical fire extinguisher or smother with dirt, sand or baking soda.
- Do NOT use Barbecue i high winds.
- Never lean over the Barbecue when lighting.
- Do NOT leave a lit Barbecue unattended. Keep children and pets away from Barbecue at all times.
- Do NOT leave Barbecue unattended while preheating or burning off food residue on high. If Barbecue has not been cleaned, a grease fi e can occur that may damage the product.
- DO NOT place empty cooking vessels on the appliance while in operation.
- Use caution when placing anything on the Barbecue while the appli-ance is in operaation.
- Do NOT attempt to move Barbecue when in use. Allow the Barbecue to cool before moving or storing.
- LP gas cylinder must be properly disconnected and removed prior to moving this Barbecue.
- Storage of Barbecue indoors is permissible only if the cylinder is disconnected, removed from the Barbecue and properly stored outdoors.
- Keep all electrical cords away from a hot Barbecue.
- After a period of storage and/or nonuse, check for leaks, burner obstructions and inspect for any abrasion, wear or cuts to the hose.
- Failure to open side shelves while igniting the Barbecue's burners, or not waiting 5 minutes to allow the gas to clear if the Barbecue does not light, may result in an explosive flam -up.
- Always use a meat thermometer to ensure food is cooked to a safe tem-perature.
- Use protective gloves when assembling this product.
- Do NOT force parts together as this can result in personal injury or dam-age to the product.
- Never cover entire cooking area with aluminium foil.
- Deaths, serios injury or damage to property may occur if the above is not followed exactly.
- Using pan larger than 240mm diameter in capacity could exceed weight limit of the side burner shelf
- Do not modify the appliance.
- This appliance must be kept away from flammable m terials during use.
- This outdoor cooking gas appliance is not intended to be installed in or on boats. For other than RV grills, a statement that this appliance is not intended to be installed in or on recreational vehicles.

WARNING
FOR YOUR SAFETY:
For Outdoor Use Only
(Outside any enclosure)

DANGER

If you smell gas -

- **Shut off gas to appliance.**
- **Extinguish any open flame.**
- **Open lid.**
- **If odor continues, keep away from the appliance and immediately call your gas supplier or your fire department.**

WARNING
FOR YOUR SAFETY:

- **Improper Installation, adjustment, alteration, service or maintenance can cause injury or property damage.**
- **Read the installation, operation, and maintenance instructions thoroughly before installing or servicing this equipment.**
- **Failure to follow these instruction could result in fire or explosion, which could cause property damage, personal injury, or death.**
- **This instruction manual contains important information necessry for the proper assembly and safe use of the appliance.**
- **Read and follow all warnings and instructions before assembling and using the appliance.**
- **Follow all warnings and instructions when using the appliance.**
- **Keep this manual for future reference.**

WARNING

CALIFORNIA PROPOSITION 65 WARNING:

(a) The burning of Gas cooking fuel generates some by products which are on the list of substances known by the State of California tocause cancer,reproductive harm,or other birth defects.To reduce exposure to these substances,always operate this unit according to the use and care manual,ensuring you provide good ventilation when cooking with Gas.
(b)Handling the brass material on this product exposes you to lead,a chemical known to the State of California to cause cancer and birth defects or other reproductive harm.Wash hands after handling.
(c)This product contains chemicals,including lead and compounds,known by the State of California ro cause cancer,reproductive ahrm, or other birth defects.
(d)Wash you hands after using this product.
For more information go to: www.P65Warnings.ca.gov

Expanded View

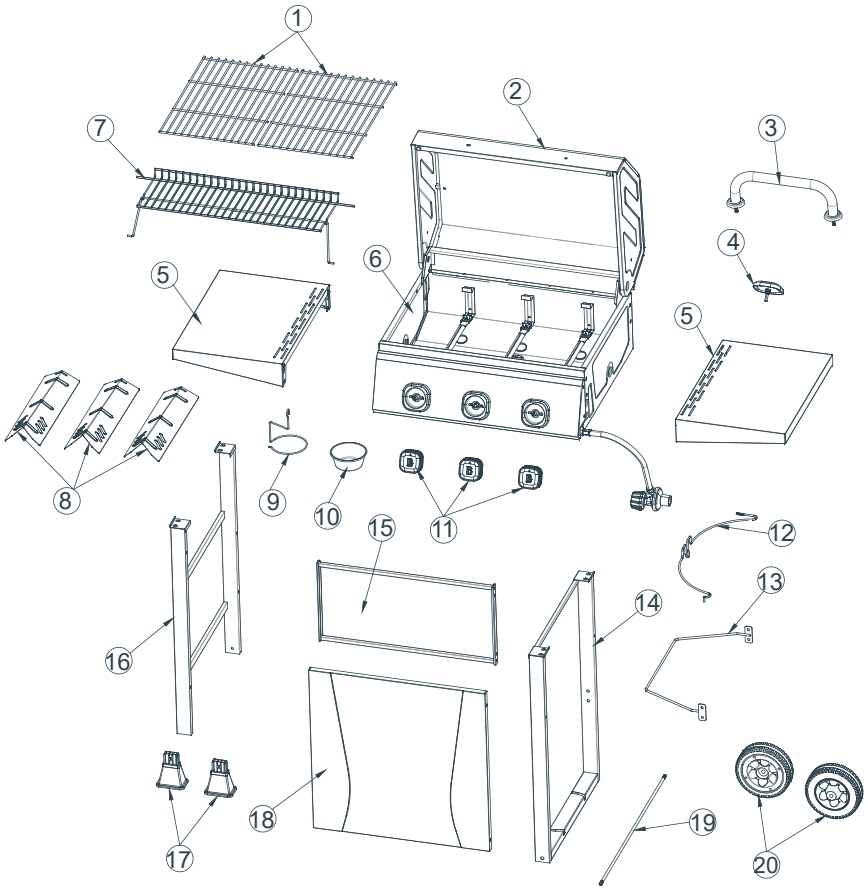

PART LIST

Part	Descrption	Qty	Part	Descrption	Qty	Part	Descrption	Qty
1	Cooking Grid	2pcs	9	Oil Cup Support	1pc	17	Leg Seat	2pcs
2	Hood	1pc	10	Oil Cup	1pc	18	Cart Front Panel	1pc
3	Hood Handle	1pc	11	Knob	3pcs	19	Wheel Axle	1pcs
4	Thermometer	1pc	12	Tank Wire	1pc	20	Wheel	2 pc
5	Side Shelf	1pc	13	Cylinder Stop Line	1pc			
6	Firebox	2pcs	14	Right Leg Weld	1pc			
7	Warming Rack	1pc	15	Cart Back Panel	1pc			
8	Flame Tamer	3pcs	16	Left Leg Weld	1pc			

HARDWARE

AA:2PCS  Bolt(ST4.8x10)	BB:12PCS  Bolt(M5x12)	CC:12PCS  Bolt(M6x15)	DD:2PCS  Nut(M8)
EE:2PCS  Wing Nut(M6)	FF:1PC  Wing Nut(M4)	GG:2PCS  Lock Washer(φ6.2)	HH:2PCS  Washer (φ6.2xφ16x1.0)
II: 1PC  Spacer (φ18*40)	JJ:2PCS  Spanner M8	KK:1PC Long Screw Driver	

ASSEMBLY INSTRUCTIONS

Step 1

DO NOT RETURN TO PLACE OF PURCHASE.
For assistance, call 1.855.200.8445 toll-free. Please have your owner's manual and model number available for reference.
Note: The model number is printed on a label which can be found on the side of the firebox

Assembly Tips:
1. Select an area where you will assemble this product. To protect components, choose a smooth surface that's free of cracks or openings.
2. Spread out all parts.
3. Tighten all hardware connections by hand first. Then, before completing each step, go back and fully tighten all hardware.
   Be careful not to over-tighten. That could damage surfaces or strip threads.
4. For best results, complete each step in the order presented.

To complete assembly you will need:
- (1) Leak detection solution (instructions on how to make the solution are included in the "Operating Instructions" section of this manual).
- (1) Precision-filled LP gas grill tank with Acme Type 1 external threaded valve connection.

Typical assembly is approximately one hour.

⚠ **CAUTION: Two (2) people are required for assembly.**

Step 2

a. Attach the two Leg Seats (17) onto the Leg Cart Leg (16) and secure it with a Bolt (AA)each.

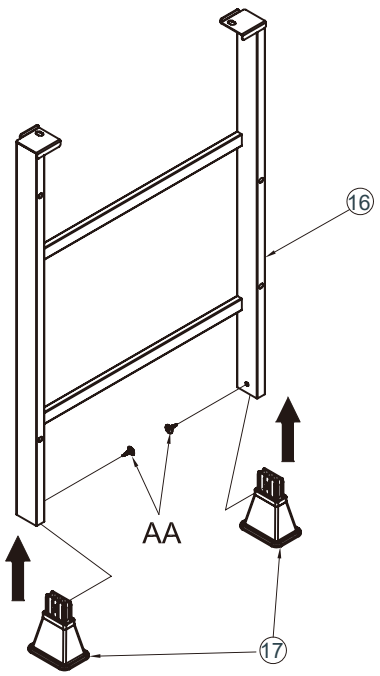

AA  ST4.8X10 2 PCS

ASSEMBLY INSTRUCTIONS (CONTINUE)

Step 3

a. Attach the Cart Front Panel (18) between the Right Leg Weld (14) and Left Leg Weld (16) with four Bolts (BB) as shown below.
b. Repeat the same procedure with Cart Back Panel (15).
c. Ensure all bolts are tightened.

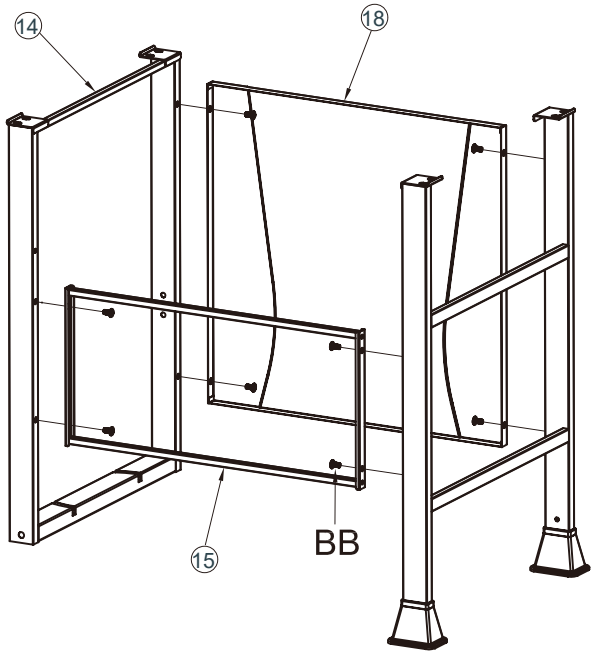

BB		M5*12	8 PCS

Step 4

a. Attache the Wheels (20), Spaes (II) and Wheel Axle (19) to the Right Leg Weld (14) and secure with Nut (DD).
b. Use the two Spanners (JJ) provided to tighten nuts

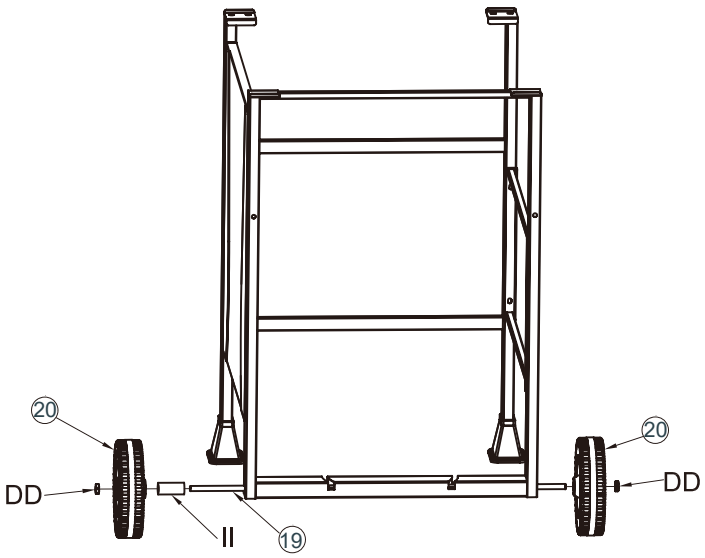

DD		M8 NUT	2 PCS
II		Spacer	1 PC

ASSEMBLY INSTRUCTIONS (CONTINUE)

Step 5

a. Following steps 1, 2, 3 and 4 attach Tank Wire (12) onto the Right Cart Leg (14) using Wing nut (FF) as shown below.

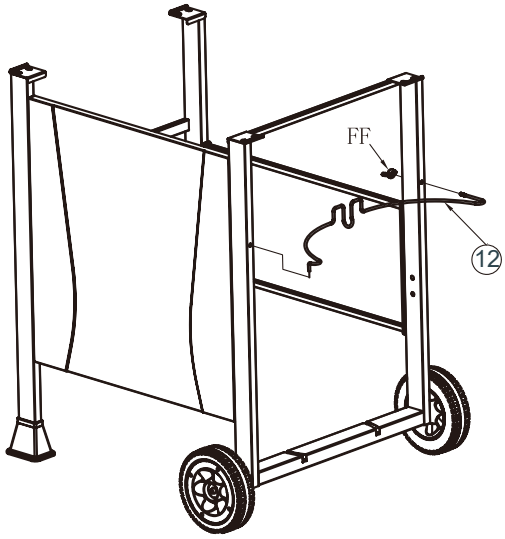



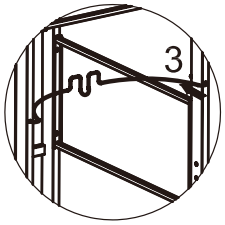

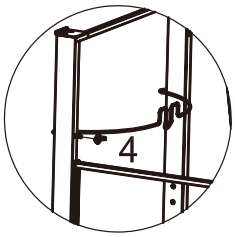

FF  M4 Wing Nut 1 PC

Step 6

a. Following steps 1, 2, and 3 attach Cylinder Stop Line (13) onto the Right Cart Leg (14) using four Bolt (BB) as shown below.

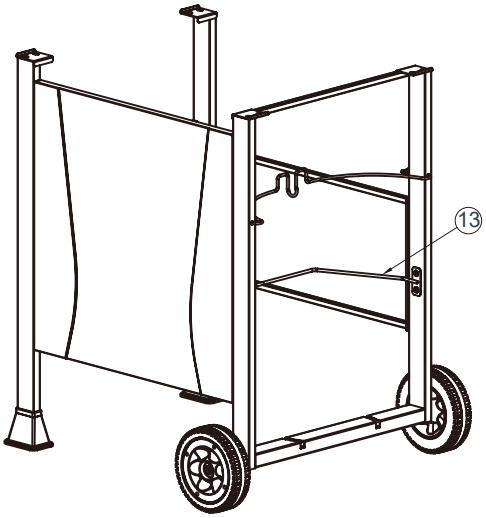

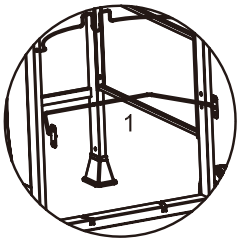

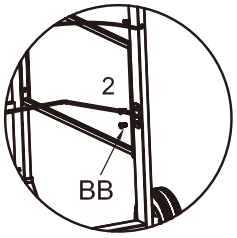

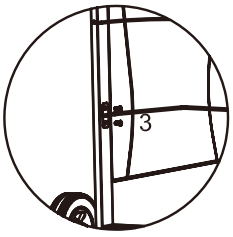

BB  M5*12 4 PCS

ASSEMBLY INSTRUCTIONS (CONTINUE)

Step 7

a. Attach the Hood Handle (3) on the Hood with two Washers (HH), two Lock Washers(GG) and two Wing Nuts (EE) as shown below.
b. Attach the Thermometer (4) onto the Hood with the pre-installed Washer and Wing Nut as below.
c. Attach the Knobs (11) onto the knob seat at the fascia.

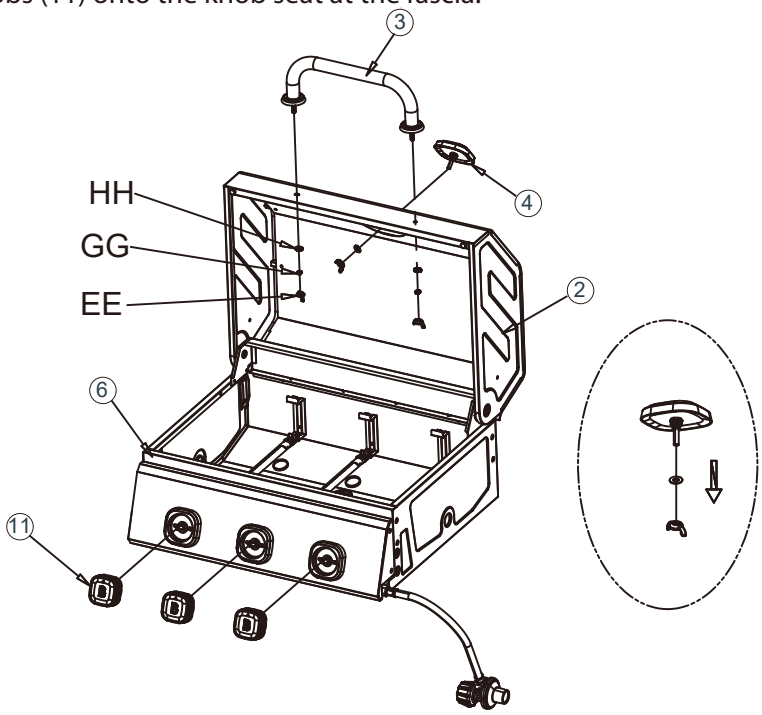

EE		M6 Wing Nut 2 PCS
GG		Lock Washer(ϕ6.2) 2 PCS
HH		Washer (ϕ6.2xϕ16x1.0) 2PCS

Step 8

a. Lift the Firebox (6) into place on the prepared cart in Step 4 and secure with four Bolts (CC) from side of the cart leg and under the firebox as shown.
b. Ensure the hose and regulator come out from the side.
c. Go back and tighten all bolts.

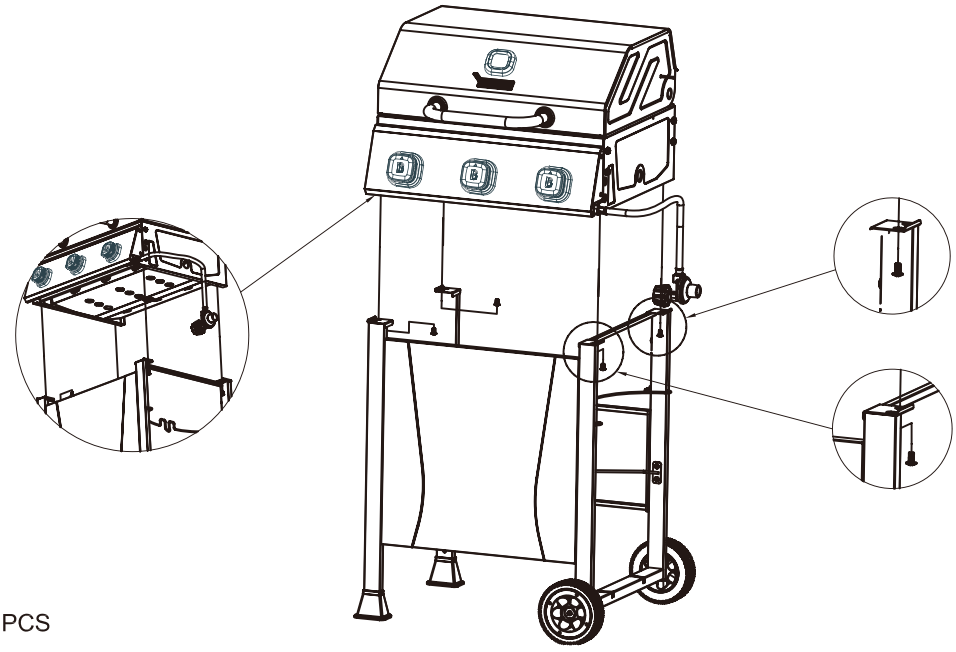

CC		M6*15 4 PCS

ASSEMBLY INSTRUCTIONS (CONTINUE)

Step 9

Start with the left side:
a. Fit two Bolts (CC) onto the two top shelf holes position on firebox as shown in Figure 1. Don't tighten it but leave bolt length of 5mm. See Figure 2.
b. Align the top two holes on the Side Shelf (5) with the two installed bolts in step "a", then attach the Side Shelf onto them.
c. Tighten the two top Bolts (CC) and further securing the Side Shelf with two more Bolts (CC) as shown in Figure3
d. Go back and ensure all the bolts are tightened.

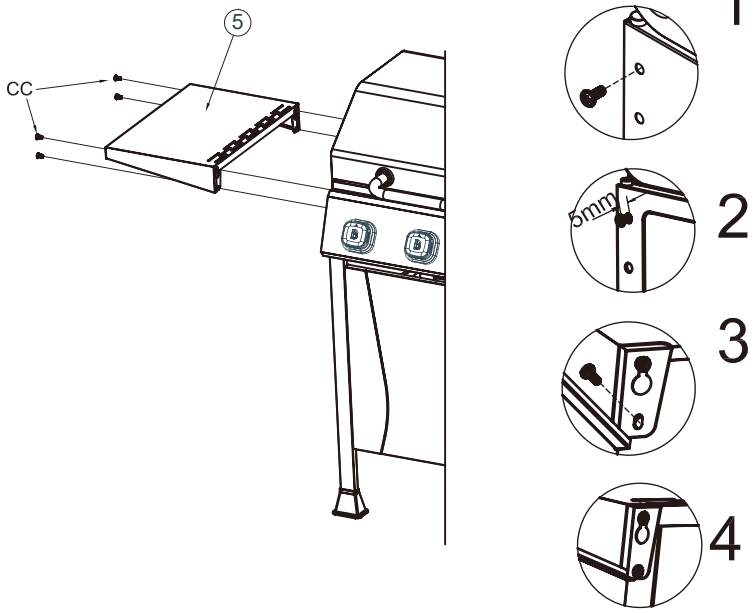

CC  M6*15 4 PCS

Step 10

Continue with the right side:
a. Fit two Bolts (CC) onto the two top shelf holes position on firebox as shown in Figure 1. Don't tighten it but leave a bolt length of 5mm. See Figure 2.
b. Align the top two holes on the Side Shelf (5) with the two installed bolts in step "a", then attach the Side Shelf onto them.
c. Tighten the two top Bolts (CC) and further securing the Side Shelf with two more Bolts (CC) as shown in Figure 3
d. Go back and ensure all the bolts are tightened.

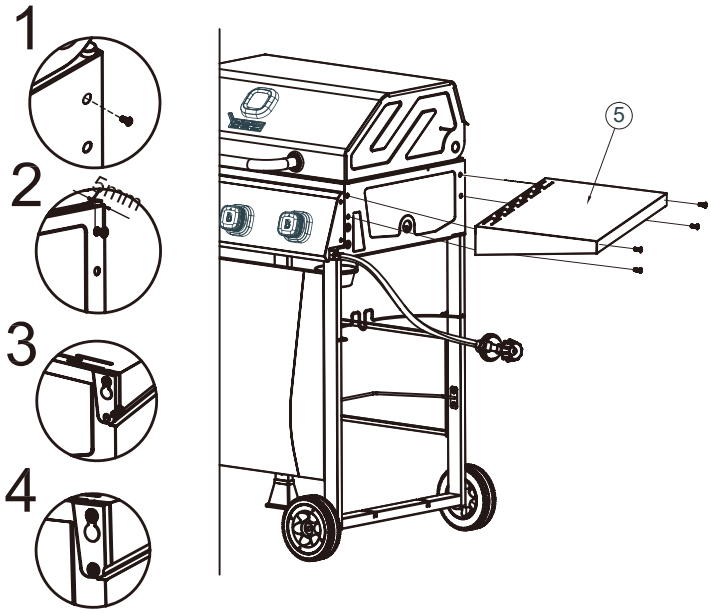

CC  M6*15 4 PCS

ASSEMBLY INSTRUCTIONS (CONTINUE)

Step 11

a. Hook the Oil cup Holder (9) into the holes provided on the base of the firebox as shown in Figure 1 below
b. Then sit the Oil cup (10) in the holder.

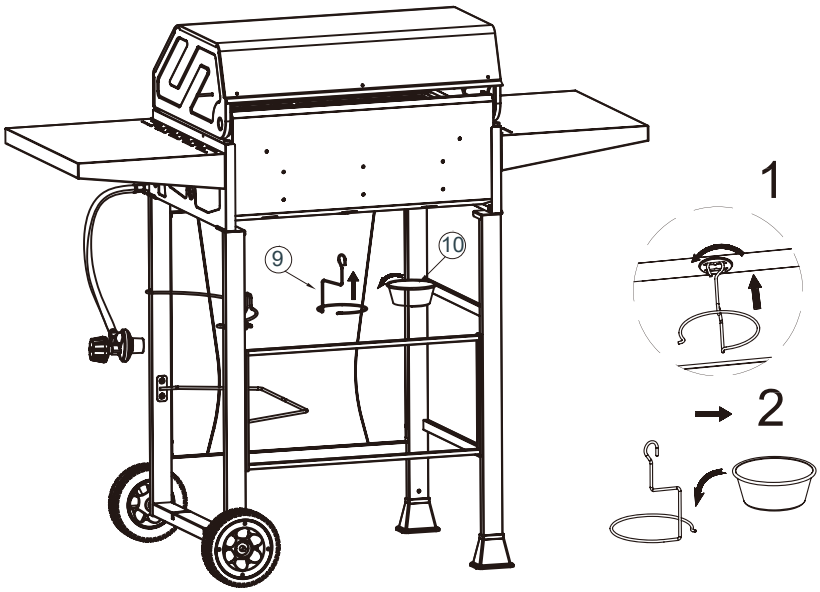

Step 12

a. Attach the Warming Rack (7) as shown, putting the prongs into the hood first (you may have to slightly bend it at this stage).

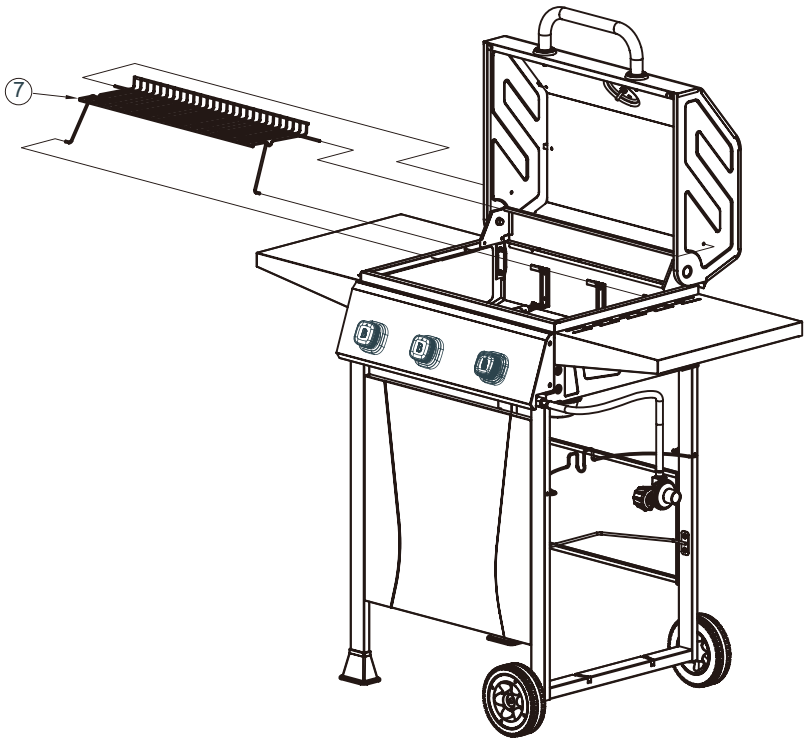

ASSEMBLY INSTRUCTIONS (CONTINUE)

Step 13

a.Sit the three FlameTamers (8) so that they rest on Heat Support located insidethe Firebox as shown below.
b. Place both the Cooking Grids (1) above the flame Tamers (8) and onto the Cooking Grid Support .

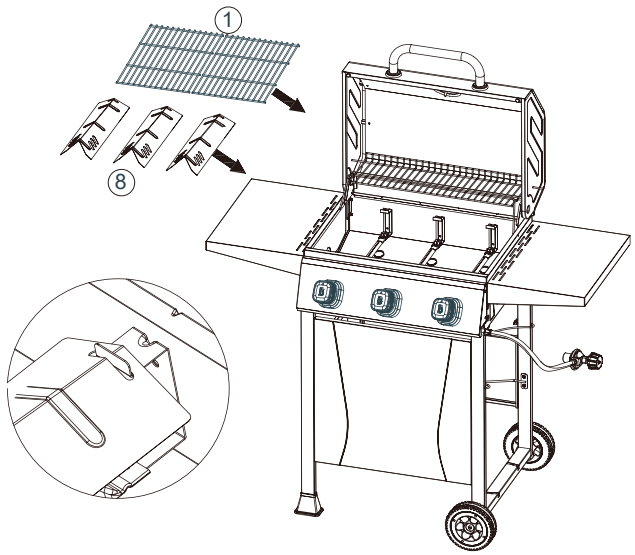

Step 14

Place the gas tank onto the gas tank slot on the Right Cart Leg and the Gas Tank Support.

WARNING:
The cylinder need to be in upright position.
Ensure the clyinder is located in a cylinder holder that is not easily get knock or pull.
This is important in order to avoid potential explosion, fire, severe personal injury or death.

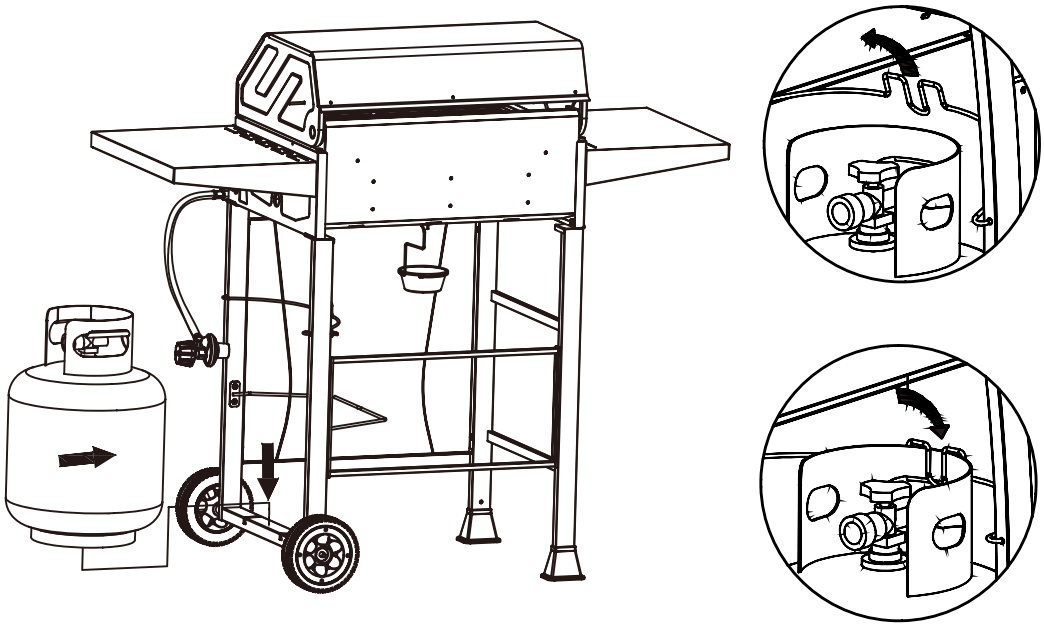

ASSEMBLY INSTRUCTIONS (CONTINUE)

Step 15

Full Assembly

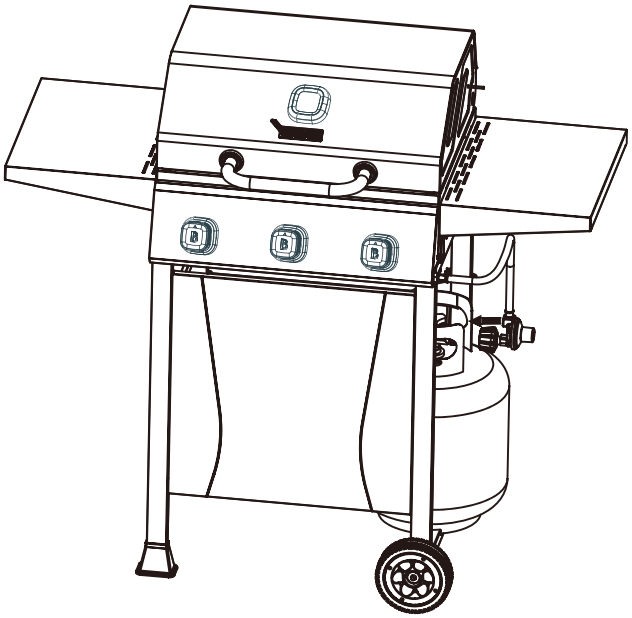

Step 16

Seasoning Barbecue

Important: season your Barbecue cooking surface every time you use it.

Chefs at Japanese steakhouses and short-order restaurants do it all the time, and it is critical for you to do it too. Seasoning helps prolong the life of your Barbecue cooking surface, makes the cooking surface non-stick and helps prevent rust.

Tools needed for seasoning:

- Metal scraper or metal spatula
- Cooking oil, such as vegetable oil or extra virgin olive oil
- Paper towels
- BBQ stone or steel wool
- Finishing oil such as flaxseed oil

CAUTION: Do NOT use corn oil as it contains a high level of sugar, which can carmelize and burn onto the surface.

1) While the Barbecue is off and cold, scrap off all excess food or rust using a metal scraper or metal spatula if any. If there are excessive of rust, use a BBQ stone and some cooking oil to scrap the rust out.
2) Clean up the Barbecue with paper towels.
3) Seasoning the Barbecue by applying a small amount of oil onto the top of Barbecue and spread it around evenly using paper towel. We recommend using flax oil if avail able.
4) Turning the burner to middle high heat and after awhile, the oil will start to smoke and the top of the Barbecue will start to discolor. Let it continue to burn until the sur face become dark brown, matt gray or bronze, which take about 30mins and is ready to cook.
5) Once finish cooking, let the Barbecue cool down.
6) Once the Barbecue has cooled, apply a layer of cooking oil evenly again. This will help prevent rusting.

USING, CONNECTING & DISCONNECTING LP GAS TANK

The installation must conform with local codes or, in the absence of local codes, with either the National Fuel Gas Code, ANSI Z223.1/NFPA 54, or the Natural Gas and Propane Installation Code CSA B149.1, or Propane Storage and Handling Code, CSA B149.2, or the Standard for Recreational Vehicles, ANSI A119.2/NFPA 1192, and CSA 2240 RV Series, Recreational Vehicle Code as applicable.

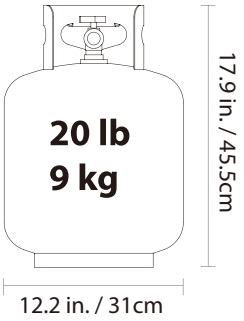

⚠ Use standard flexible tube with length less than 1.5 m. the tube shall be readily visible across its entire length for inspection after installation.

To operate, you will need on precision-filled standard barbecue grill LP gas tank with external valve threads.

⚠ **CAUTION: LP gas tank must be properly disconnected and removed prior to moving this appliance**

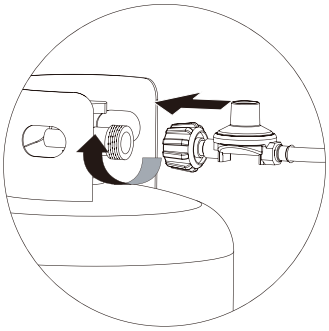

Connecting LP Gas Tank

1. Before connecting, be sure there is no debris caught in the head of the LP gas tank, head of the regulator valve or in the head of the burner or burner ports.
2. Connect regulator/hose assembly to tank by turning knob clockwise until it stops. The cylinder supply system must be arranged for vapor withdrawal.

Disconnecting LP Gas Tank

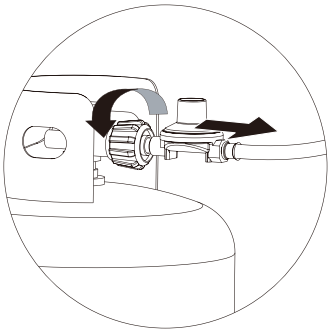

1. Before disconnecting, make sure the LP gas tank valve is "CLOSED."

2. Disconnect regulator/hose assembly from LP gas tank by turning knob counterclockwise until it is loose.

⚠ CAUTION: LP gas tank must be properly disconnected and removed prior to moving this appliance.

3. Place the protective cap cover on the LP tank and store the tank outdoors in a well ventilated area out of direct sunlight.

OPERATING INSTRUCTIONS

Burner Connections

1. Make sure the regulator hose and valve connections are securely fastened to the burner and the tank.
2. Visually check the connection between theburner/venturi tube and orifice.
3. Make sure the burner/venturi tube fits over theorifice.

⚠ **WARNING: Failure to inspect this connection or follow these instructions could cause a fire or an explosion which can cause death, serious bodily injury or damage to property.**

4. Please refer to diagram for proper installation (Figure 1).
5. If the burner/venturi tube does not rest flush to the orifice, as shown, please contact Brand-Man Grills/Captivate Brands USA for assistance.

Figure 1

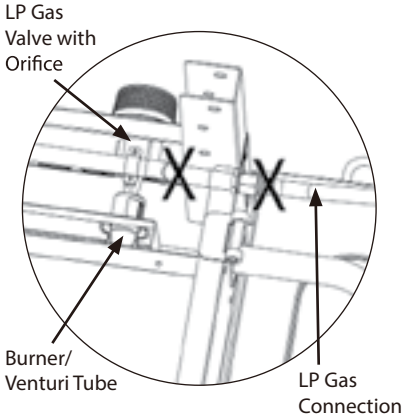

OPERATING INSTRUCTIONS (CONTINUE)

Tank/Gas Line Connection

1. Make 2-3 oz. of leak detection solution by mixing one part liquid dish washing soap with three parts water.
2. Make sure control knobs are in the " OFF" position (Figure 2).
3. Connect LP gas tank per "Installing LP Gas Tank" section.
4. Turn LP gas tank valve to "OPEN."
5. Spoon several drops of solution, or use a squirt bottle, at all "X" locations (Figures 1 and 3).

a. If any bubbles appear, turn LP gas tank valve to "CLOSED," reconnect and re-test.

b. If you continue to see bubbles after several attempts, turn LP gas tank valve to "CLOSED" and disconnect LP gas tank, per "Disconnecting LP Gas Tank" section. Contact H&H ASIA LTD for assistance.

c. If no bubbles appear after one minute, turn LP gas tank valve to "CLOSED," wipe away solution and proceed.

Figure 2

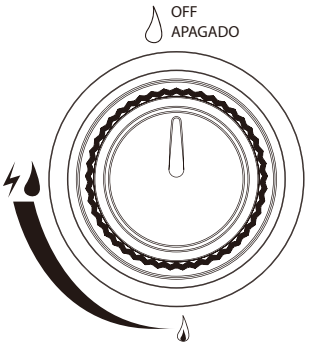

Figure 3

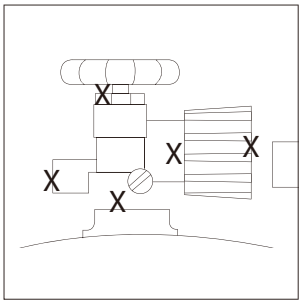

Operating Main Burners

First Use

1. Make sure all labels, packaging and protective films have been re moved from the Barbecue.
2. Light Barbecue per "Lighting" section.
3. Remove manufacturing oils before cooking on this Barbecue for the first time.
4. Season your Barbecue cooking surface per "Seasoning Barbecue" section.

Lighting

⚠ CAUTION: Keep outdoor gas cooking appliance area clear and free from combustible materials, gasoline and other flammable vapors and liquids.

⚠ CAUTION: Do NOT obstruct the flow of combustion and ventilation air.

⚠ CAUTION: Check and clean burner/venturi tubes for insects and insect nests. A clogged tube can lead to a fire.

⚠ CAUTION: Do NOT use non-stick cooking sprays because they contain a lot of water and can burn onto the Barbecue, damaging the surface.

⚠ CAUTION: Do NOT use corn oil as it contains a high level of sugar, which can carmelize and burn onto the surface.

1. Check for obstructions of airflow to the burners. Spiders, insects and webs can clog the burner/venturi tube. A clogged burner tube can lead to a fire.
2. All control knobs must be in the " OFF" position (Figure 2).
3. Connect LP gas tank per "Installing LP Gas Tank" section.

Figure 4

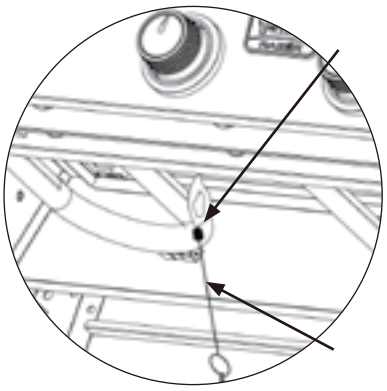

Figure 5

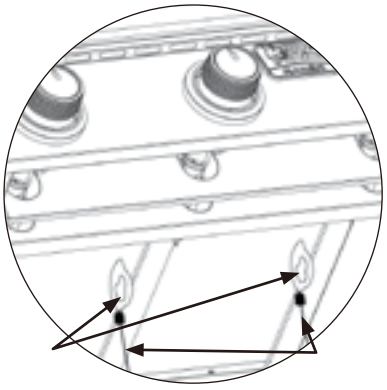

OPERATING INSTRUCTIONS (CONTINUE)

4. Turn LP gas tank valve to "OPEN."
5. Push and turn any control knob to (HIGH). The burner should light. If it does not, repeat up to three times.
6. If ignition does not occur in 5 seconds, turn burner control knob "OFF," wait 5 minutes, and repeat lighting procedure.
7. If igniter does not light burner, use a lit match secured with the Lighting Hook (included with the Barbecue) to light burners. Access the burners from under the Barbecue. Position lit match near side of burner (Figures 4 and 5).

Important: Always use the Lighting Hook (included) when lighting burners with a match.

8. After lighting, observe the burner flame. Make sure all burner ports are lit and flame height matches illustration (Figure 6).

Figure 6

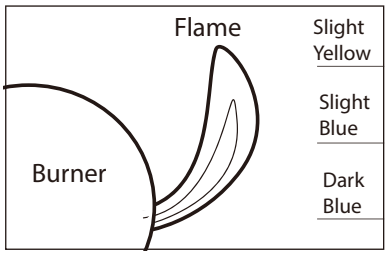

Note: Each burner lights independently - repeat steps 5-9 for the other burners.

⚠ CAUTION: If burner flame goes out during operation, immediately turn the control knobs to the "OFF" position, turn the LP gas tank valve to "CLOSED" and open lid to let the gas clear for 5 minutes before relighting.

Controlling Flare-ups

CAUTION:

1. **If a grease fire develops, turn control knobs to the "OFF" position and LP gas tank valve to "CLOSED." Do NOT use water on a grease fi e. This can cause the grease to splatter and could result in serious burns, bodily harm or other damage.**
2. **Do NOT leave Barbecue unattended while preheating or burning off ood residue on or (HIGH). If Barbecue has not been cleaned, a grease fire can occur.**

WARNING: When cooking, fire extinguishing materials should be readily accessible. In the event of an oil/grease fire, use type BC dry chemical fire extinguisher or smother with dirt, sand or baking soda. Do NOT attempt to extinguish with water.

Flare-ups are a part of cooking meats on a Barbecue and add to the unique flavor of grilling.

Excessive fla e-ups can over-cook your food and be dangerous.

Important: Excessive flare-ups result from the build-up of grease in the grease cup.

If a grease fire occurs, turn the control knob(s) to " OFF" until the grease burns out.

If excessive flare-ups occur, **DO NOT** pour water onto the flames.

Minimize Flare-ups:

1. Trim excess fat from meats prior to cooking.
2. Cook high fat content meats on (LOW) setting or indirectly.
3. Ensure that your Barbecue is on a hard, level, non-combustible surface and the grease is allowed to drain into grease receptacle.

NOTE: Using pan larger than 240mm diameter in capacity could exceed weight limit of the side burner shelf

CLEANING AND CARE

⚠ CAUTION:

1. All cleaning and maintenance should be done when Barbecue is cool and with the fuel supply disconnected.
2. Do NOT clean any Barbecue part in self-cleaning oven. The extreme heat will damage the finish.
3. Do Not enlarge valve orifices or burner ports when cleaning the valves or burners.

Notices

1. This Barbecue should be thoroughly cleaned and inspected on a regular basis.
2. Abrasive cleaners will damage this product.
3. Never use oven cleaner to clean any part of Barbecue.

Before Each Use:

1. Keep the Barbecue area clean and free from any combustible materials, gasoline, and other flammable vapors and liquids.
2. Do NOT obstruct the flow of the combustion of LP gas and the ventilation of air.
3. Keep the ventilation opening(s) of the LP gas tank area free and clear from debris.
4. Visually check the burner flames to make sure your Barbecue is working properly (Figure 7).
5. See sections below for proper cleaning and seasoning instructions.
6. Check for obstructions of airflow to the burners. Spiders, insects and webs can clog the burner/venturi tube. A clogged burner tube can lead to a fire.

Cleaning Cart Surfaces

1. Wipe surfaces clean with mild dish washingdetergent or baking soda mixed with water.
2. For stubborn surfaces, use a citrus-based degreaser and a nylon scrubbing brush.
3. Rinse clean with water.
4. Allow to air dry.

Cleaning Main Burners

1. Turn LP gas tank valve to "CLOSED."
2. Turn all control knobs clockwise to the " OFF" position.

Note: A "poof" sound is normal as the last of the gas is burned.

3. Disconnect LP gas tank per "Disconnecting LP Gas Tank" section
.
4. Remove Barbecue by lifting it off the cart.
5. Remove burners by removing the fasteners, whichsecure the burners to the frame bottom.
6. Lift burners up and away from gas valve orifice.
7. Disconnect wire from spark electrode.

Figure 7

Burner Flame Conditions
Use this chart to see if your burners need to be cleaned

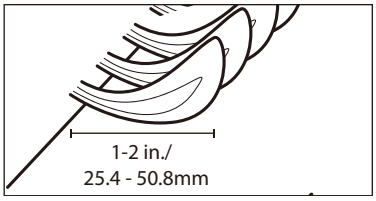

Normal: Soft blue flames with yellow tips between 1 in- 2 in. height

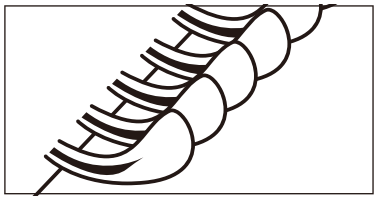

Needs cleaning: Noisy with hard blue flames

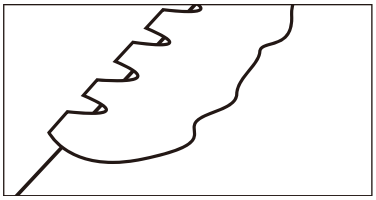

Has to be replaced: Wavy with yellow flames

CLEANING AND CARE

8. Clean venturi of each burner with small bottle brush or compressed air.
9. Remove all residue and dirt from burner surface.
10. Clean any clogged ports with a stiff wire (such as an opened paper clip).
11. Inspect burners for any damage (cracks or holes). If damage is found, replace with new burner(s) from manufacturer.
12. Re-install burner(s). Checking to insure that gas valve orifice is correctly positioned inside each burner/venturi tube. Also, check position of spark electrode.
13. Connect wire to spark electrode.
14. Replace Barbecue.
15. Connect LP gas tank per "Installing LP Gas Tank" section.
16. Perform leak test per "Checking for Leaks" section.

Before Storing

1. Turn LP gas tank valve to "CLOSED."
2. Turn all control knobs clockwise to the " OFF" position.

   Note: A "poof" sound is normal as the last of the gas is burned.
3. Disconnect LP gas tank per "Disconnecting LP Gas Tank" section.
4. Clean all surfaces.
5. Lightly coat the burner(s) with cooking oil to prevent excess rusting.
6. Season your Barbecue cooking surface per "Seasoning Barbecue" section.
7. If storing the Barbecue indoors, disconnect the LP tank per "Disconnecting LP Gas Tank" section.
8. Place the protective cap cover on the LP tank and store the tank outdoors in a wellventilated area out of direct sunlight.
9. If storing the Barbecue indoors, cover the Barbecue and store in a cool dry place.
10. If storing the Barbecue outdoors, cover the Barbecue with a Barbecue cover for protection from the weather.

Seasoning Barbecue

Important: season your Barbecue cooking surface every time you use it.

Chefs at Japanese steakhouses and short-order restaurants do it all the time, and it iscritical for you to do it too. Seasoning helps prolong the life of your Barbecue, makes the cooking surface non-stick and helps prevent rust.

Tools needed for seasoning:

- Metal scraper or metal spatula
- Cooking oil, such as vegetable oil or extra virgin olive oil
- Paper towels
- BBQ stone or steel wool
- Finishing oil such as flaxseed oil

⚠ **CAUTION: Do NOT use corn oil as it contains a high level of sugar, which can carmelize and burn onto the surface.**

CLEANING AND CARE

First Use

1. Light Barbecue per "Lighting" section.
2. Keep burners on and (HIGH) for 15 minutes.
3. Turn Barbecue off per "Turning Off" section.
4. Allow Barbecue to cool, but still be slightly warm.
5. Wipe off Barbecue surface, inner and outer walls with paper towels until clean.

Note: While drying you may notice the towel may have some discoloration. This is normal.

6. Apply finishing oil onto Barbecue surface, inner and outer walls and evenly coat with rolled up paper towels.
7. Repeat this process at least twice.

After Each Use

1. Turn Barbecue off per "Turning Off" section.
2. While the Barbecue is still warm, gently scrape off all food residue with a scraper.
3. Wipe down Barbecue surface, inner and outer walls with a towel or paper towels.
4. For stubborn food residue:
   a. Light Barbecue per "Lighting" section.
   b. Apply cooking oil onto Barbecue surface.
   c. Allow oil to "boil" food residue off.
   d. Repeat steps 1 through 3.
   e. If necessary, use a BBQ stone and scrub the food residue off.
   f. Continue with "Seasoning Barbecue" instructions.
5. Wipe off Barbecue surface, inner and outer walls with paper towels until clean.
   Note: While drying you may notice the towel has some discoloration. This is normal.
6. Apply finishing oil onto Barbecue surface, inner and outer walls and evenly coat with rolled up paper towels.
7. Light Barbecue per "Lighting" section.
8. Keep burners on and (HIGH) for 15 minutes or until finishing oil starts to smoke.
9. Turn Barbecue off per "Turning Off" section.
10. Repeat steps 6-9 a minumum of 2 additional times.
11. Following "Before Storing" section.

Refurbish the Barbecue Surface

1. If Barbecue is off, light per "Lighting" section for 10 minutes. Then turn Barbecue off per "Turning Off" section.
2. If Barbecue is on, turn Barbecue off per "Turning Off" section.
3. While the Barbecue is still warm, use a scraper or metal spatula to remove as much rust and food residue as you can from the Barbecue surface, inner and outer walls.
4. Apply a liberal amount of cooking oil onto the Barbecue surface.
5. Using a BBQ stone, scrub the Barbecue surface. Apply additional cooking oil as need.
6. Wipe off Barbecue surface, inner and outer walls with paper towels.
7. Repeat steps 3-5 until paper towels no longer show any rust.
8. Apply finishing oil onto Barbecue surface, inner and outer walls and evenly coat with rolled up paper towels.
9. Light Barbecue per "Lighting" section.
10. Keep burners on and (HIGH) for 15 minutes or until finishing oil starts to smoke.
11. Turn Barbecue off per "Turning Off" section.
12. Repeat steps 7-10 until the surface has a nice dark color.
13. Following "Before Storing" section.

PRODUCT REGISTRATION

For faster warranty service, please register your product immediaterly.

REPLACEMENT PARTS

For replacement parts, please contrct Brand-Man Grills Captivate Brands USA, Inc. via 1-855-200-8445

WARRANTY

Brand-Man Grills/Captivate Brands USA, Inc. warrants to the original retail purchaser of this product, and to no other person, that if this product is assembled, maintained, and operated in accordance with the printed instructions accompanying it, then for a period of one (1) year from the date of purchase, the product's components shall be free from defects in materialand workmanship, except for the cooking surface which is not covered by the Limited Warranty. Brand-Man Grills/Captivate Brands USA, Inc. may require reasonable proof of your date of purchase. Therefore, you should retain your sales slip or invoice. This Limited Warranty shall be limited to the repair or replacement of parts, which prove defective un-der normal use and service and which Brand-Man Grills/Captivate Brands USA, Inc. shall determine in its reasonable discretion upon examination to be defective. Before returning any parts, you should contact Brand-Man Grills/Captivate Brands USA, Inc.D's Customer Care Department using thecontact information listed below.if Brand-Man Grills/Captivate Brands USA,Inc.confirms, after examination, a defect covered by this Limited Warranty in any returned part, and if Brand-Man Grills/Captivate Brands USA, Inc. approves the claim, Brand-Man Grills/Captivate Brands USA, Inc. will replace such defective part without charge. If you return defective parts, trans-portation charges must be prepaid by you. Brand-Man Grills/ Captivate Brands USA, Inc. will return replacement parts to the original retail purchaser, freight or postage prepaid.

This Limited Warranty does not cover any failures or operating difficulties due to accident,abuse,misuse,alteration, misapplication,improper installation orimproper maintenance or service by you or any third party, or failure to perform normal and routine maintenance on the product as set out in this owner's manual. In addition, theLimited Warranty does not cover damage to the finish,such as scratches,dents,discoloration,rust or other weatherdamage after purchase.

This Limited Warranty is in lieu of all other express warranties. Brand-Man Grills/Captivate Brands USA, Inc. disclaims all warranties for products that are purchased from sellers other than authorized retailers or distributors, including the warranty of merchantability or the warranty of fitness for a particular purpose.Brand-Man Grills/Captivate Brands USA， Inc.ALSO DISCLAINS ANY AND ALL IMPLIED WARRANTIES, INCLUDING WITHOUT LIMITATION THE IMPLIED WARRANTIES OF MERCHANTABILITY AND FITNESS FOR A PARTICULAR PURPOSE. BRAND-MEN GRILLS/CAPTIVATE BRANDS USA, INC. SHALL HAVE NO LIABILITY TO PURCHASER OR ANY THIRD PARTY FOR ANY SPECIAL, INDIRECT, PUNITIVE, INCIDENTAL, OR CONSEQUENTIAL DAMAGES.

Brand-Man Grills/Captivate Brands USA, Inc. further disclaims any implied or express warranty of, and assumes no responsibility for, defects in workmanship caused by third parties.

This limited Warranty gives the purchaser specific legal rights; a purchaser may have other rights depending upon where he or she lives. Some jurisdictions do not allow the exclusion or limitation of special, incidental or consequen-tial damages, or limitations on how long a warranty lasts, so the above exclusion and limitations may not apply to everyone.

Brand-Man Grills/Captivate Brands USA, Inc. does not authorize any person or company to assume for it any other obligation or li-ability in connection with the sale, installation, use, removal, return, or replacement of its equipment, and no such representations are binding on Brand-Man Grills/Captivate Brands USA, Inc..

Brand-Man Grills/Captivate Brands USA, Inc.
25541 Arctic Ocean Drive Lake Forest, CA. 92630
1-855-200-8445
949-229-8927
Email: Service@brandmangrill.com

For faster warranty service, please register your product immediately.Please add the registration site information: https://brandmangrill.com/register/

TROUBLESHOOTING

Problem	Possible Cause	Prevention/Cure
Burner will not light using igniter	LP gas tank valve is closed	Make sure regulator is securely attached to the LP gas tank per "Installing LP Gas Tank," then turn LP gas tank valve to "OPEN"
	LP gas tank low or empty	Exchange, refill or replace LP gas tank
	LP gas	1. Turn LP gas tank valve to "CLOSED" 2. Wait 5 minutes for gas to clear 3. Follow "Checking for Leaks" section
	Wires or electrode covered with cooking residue	Clean wire and/or electrode with rubbing alcohol
	Electrode and burners are wet	Wipe dry with cloth
	Electrode cracked/broken - sparks at crack	Replacement part(s) may be needed - contact Customer Care
	Wire loose or disconnected	Reconnect wire or replacement part(s) may be needed - contact Customer Care
	Wire is shorting (sparking) between igniter and electrode	Replacement part(s) may be needed - contact Customer Care
	Bad igniter	Replacement part(s) may be needed - contact Customer Care
Burner will not light with match	No gas flow	Check if LP gas tank is empty A. If empty, exchange, refill or replace LP gas tank B. If LP gas tank is not empty, refer to "Sudden drop in gas flow or reduced flame height" (see below)
	LP gas tank is low or empty	Exchange, refill or replace LP gas tank
	LP gas	1. Turn LP gas tank valve to "CLOSED" 2. Wait 5 minutes for gas to clear 3. Follow "Checking for Leaks" section
	Coupling nut and regulator not fully connected	Turn the coupling nut about one-half to three-quarters additional turn until solid stop. **Tighten by hand only - do NOT use tools**
	Obstruction of gas flow	1. Clear burner/venturi tube 2. Check for bent or kinked hose
	Disengagement of burner to valve	Re-engage burner and valve
	Spider webs or insect in venturi	Clean burner/venturi tube
	Burner ports clogged or blocked	Clean burner ports
Sudden drop in gas flow or reduced flame height	Out of gas	Exchange, refill or replace LP gas tank
	Overfilling prevention device may have been activated	1. Turn control knob to"OFF" 2. Wait 30 seconds and light Barbecue 3. If flames are still too low, reset the overfilling prevention device: a. Turn control knob(s) " OFF" b. Turn LP gas tank valve to "CLOSED" c. Disconnect regulator d. Turn control knobs to ϟ and ϟ (HIGH) e. Wait 1 minute f. Turn control knobs to " OFF" g. Reconnect regulator and leak check connections, being careful not to fully open valve h. Light Barbecue per "Lighting" section
Sudden drop in gas flow or reduced flame height	Burner ports are clogged or blocked	Clean burner ports
Flame is yellow or orange	New burner may have residual manufacturing oils	Burn Barbecue for 15 minutes on ϟ and ϟ (HIGH) with the lid closed
	Spider webs or insect nest in venturi	Clean venturi
	Food residue, grease, etc. on burners	Clean burner
	Poor alignment of valve to burner/venturi tube	Ensure burner/venturi tube is properly engaged with valve
Flame goes out	High or gusting winds	Do not use Barbecue in high wind
	Low on LP Gas	Exchange, refill or replace LP gas tank
	Overfillinf prevention device may have been activated	Refer to "Sudden drop in gas flow or reduced flame height" (see above)
Flare-up	Grease buildup	Remove and clean Barbecue parts per "Cleaning and Care" Section
	Excess fat in meat	Trim fat from meat before cooking
	Excessive cooking temperature	Adjust to lower cooking temperature
Persistent grease fire	Excessive cooking temperature	1. Turn control knobs to "OFF" 2. Turn LP gas tank valve to "CLOSED" 3. Leave lid in closed position and let fire burn out 4. After Barbecue cools, remove and clean all parts per "Cleaning and Care" section
Flashback (fire in burner tube(s))	Burner and/or burner/venturi tube are blocked	Adjust to lower cooking temperature
Barbecue Surface	Barbecue has started to rust	With use the Barbecue surface will rust, this is normal. Fol w the "Refurbish the Barbecue Surface" instructions in the "Seasoning Barbecue" section to season your Barbecue surface.
	Barbecue surface looks dull	The cooking surface has gotten too hot, and is no longer seasoned. Season grill per "Seasoning Barbecue" section

Captivate Brands USA, Inc.
25541 Arctic Ocean Drive,
Lake Forest, CA.92630
If you have any questions or problems,
you can contact our customer service at
1-855-200-8445 ext 102 or
help@supportandspare.com
from 9:00 AM - 5:00 PM Monday to Friday.
(Pacific). All emails and voice-mail calls
will be answered within 24 hours.