ASSEMBLY INSTRUCTIONS

Bed Queen

Avoid using sharp objects such as a knife to cut open packing as you may accidentally damage the item.

PARTS LIST

ITEM	DESCRIPTION	SKETCH	QUANTITY
HW1	Screw : 1/4x70mm	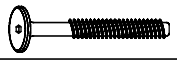	8x
HW2	Dowel : 10x40mm		16x
HW3	Screw : 4,0x30mm	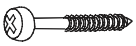	12x
HW4	Screw : 7,0x80mm	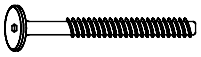	8x
HW5	Screw : 7,0x60mm	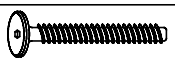	5x
HW6	Allen Key		1x
HW7	Elliptical Nut : 1/4x25mm		8x
HW8	Dowel : 8x30mm		54x
HW9	Screw : 4,0x45mm		8x
A	Upper Grid Crossbar	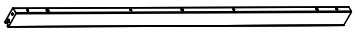	2x
B	Lower Grid Crossbar	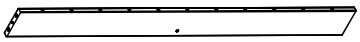	2x
C	Large Grid		12x
D	Small Grid		12x
E	Large Left Foot	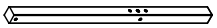	1x
F	Large Right Foot	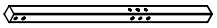	1x
G	Small Left Foot	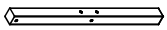	1x
H	Small Right Foot	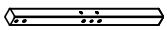	1x
I	Side Rails		2x
J	Top Bar		2x
K	Slat	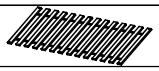	2x
L	Central Foot Support		1x
M	Center Foot		3x

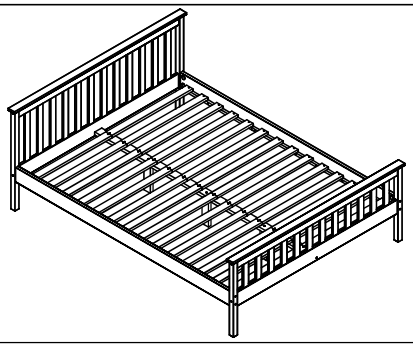

ASSEMBLY INSTRUCTIONS

Do not fully tighten bolts until assembly is complete.

Step 1

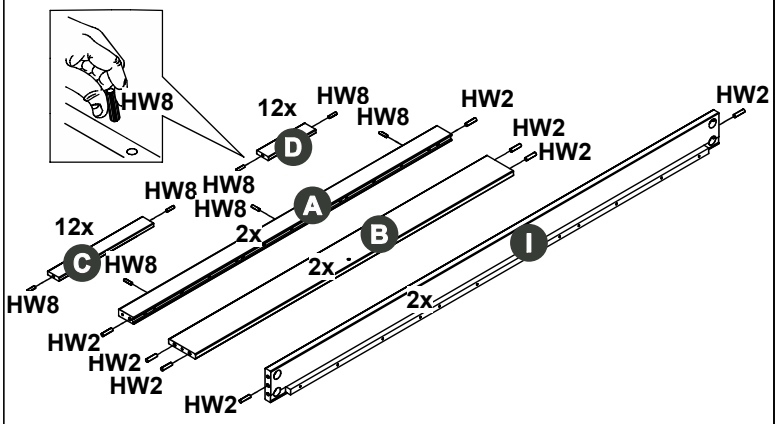

Step 1: Insert the dowels in parts A, B, C, D and I

Step 2

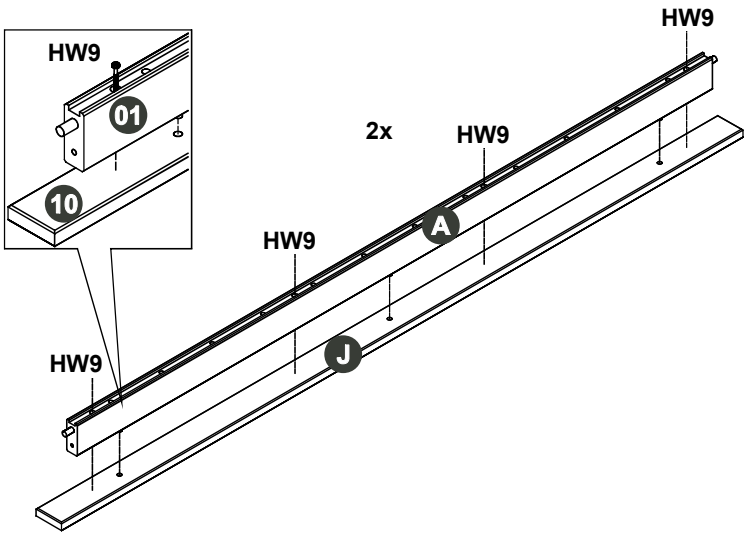

Step 2: Join part A and J with HW9 screw

Step 3

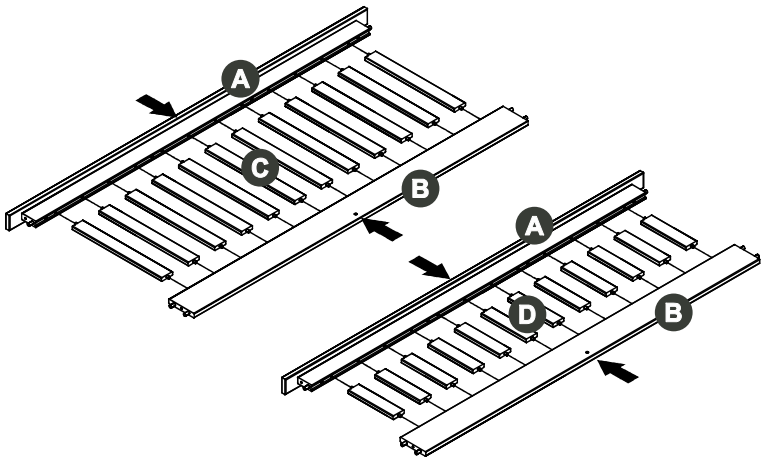

Step 3: Fit parts A and B, on the grid C and D

Step 4

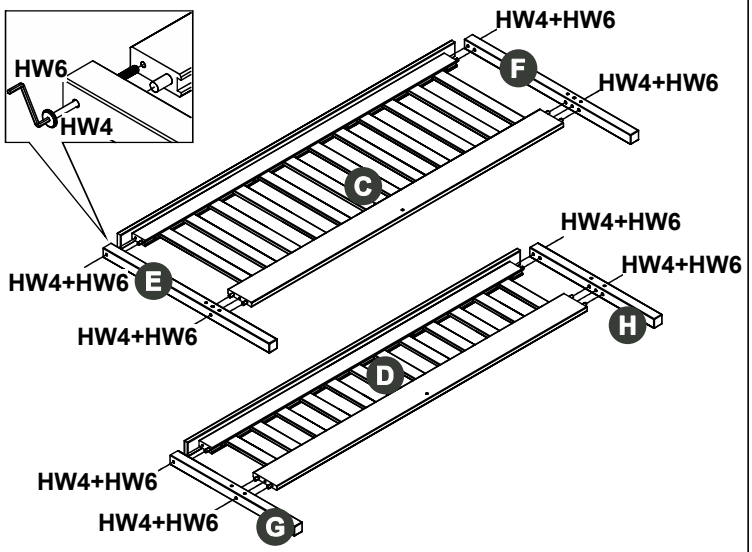

Step 4: Join grid C with feet E + F with HW4 screw and HW6 key
Join grid D with feet G + H with HW4 screw and HW6 key

Step 5

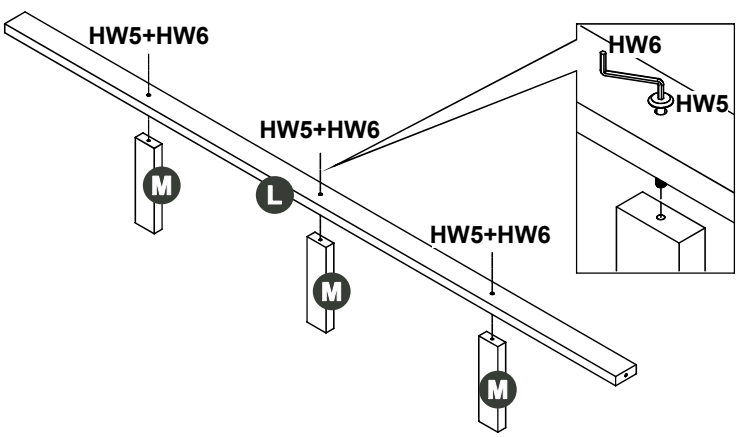

Step 5: Join piece L + M with screw HW5 and key HW6

Step 6

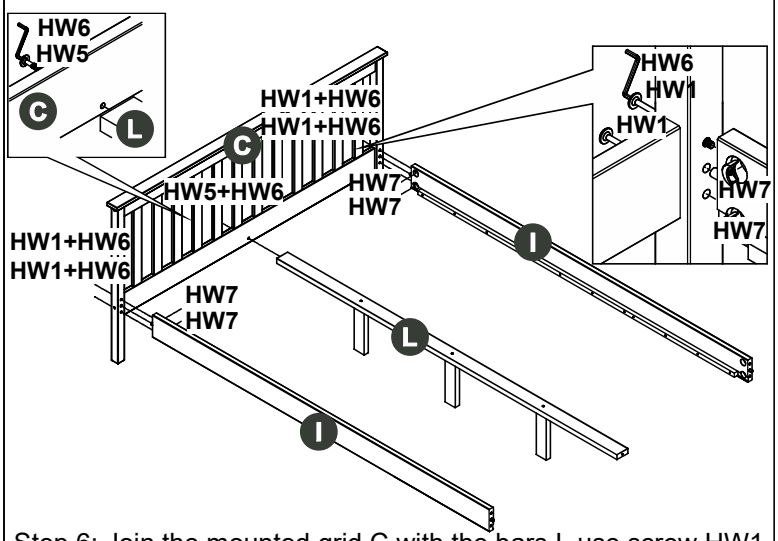

Step 6: Join the mounted grid C with the bars I, use screw HW1 with key HW6 and nut HW7
Fix the support L with screw HW5 and key HW6

ASSEMBLY INSTRUCTIONS

Do not fully tighten bolts until assembly is complete.

Step 7

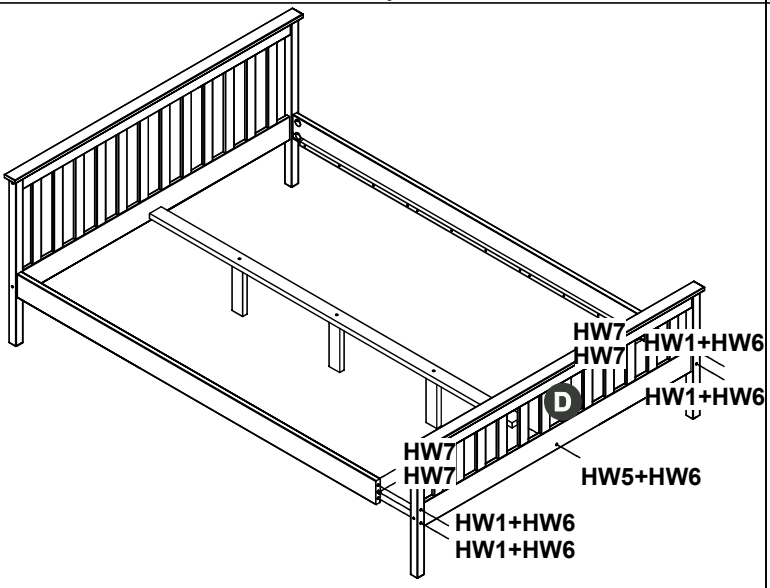

Step 7: Join the mounted grid D with the bars I, use screw HW1 with key HW6 and nut HW7
Fix the support L with screw HW5 and key HW6

Step 8

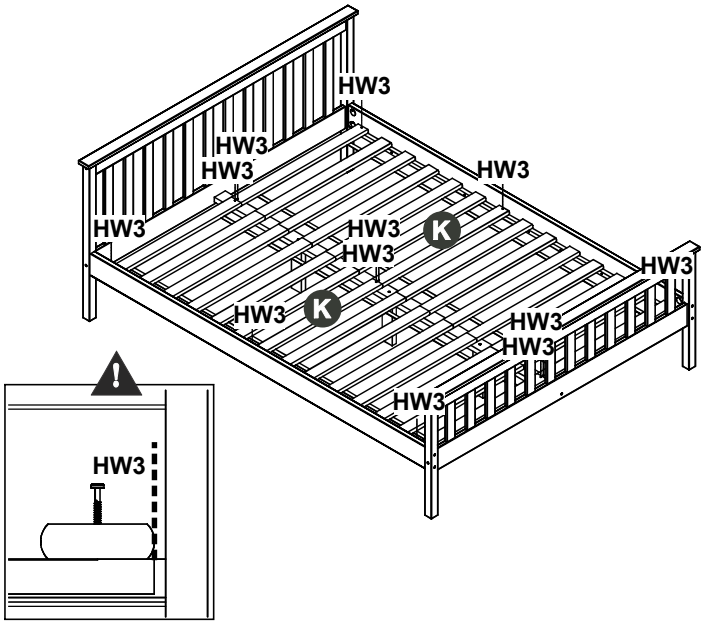

Step 8: Fit the platforms K and fix with screws HW3

CLEANING INSTRUCTIONS: Clean with Soft cloth, brush, or lightly vacuum.

ADULT ASSEMBLY REQUIRED

If you are missing any parts or have any questions regarding assembly, do not return this item to the retailers store. Please call our toll-free, customer service number and have this assembly manual open to the parts list ready to provide the model name, number and part name or number.

