# Assembly Instruction

Decorate your home, Brighten wonderful life

## B-CA01108

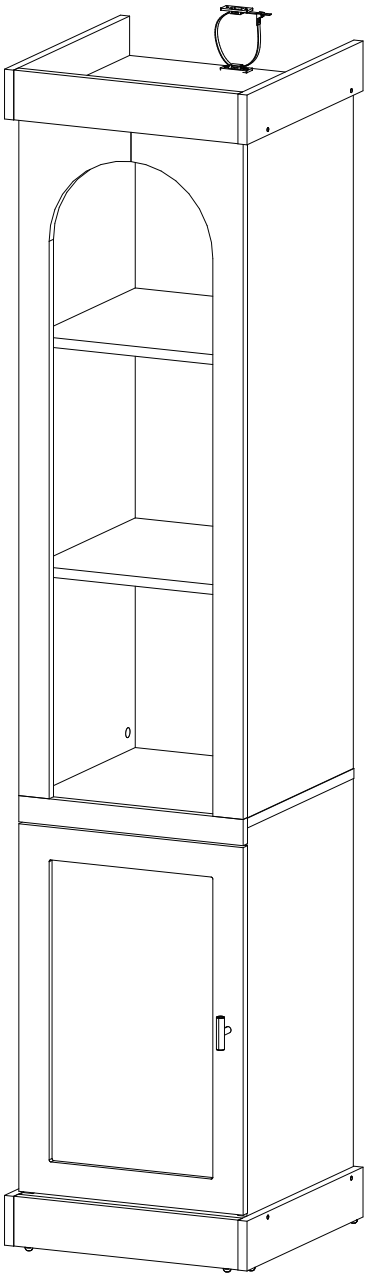

**Scan with Your Camera App to Contact Our Customer Support Team for Any Product or Installation Issues !**

# Notes:

## 1. ASSEMBLY PREPARATION AND TIPS FOR ASSEMBLY

1). Remove all packaging materials, staples and packing straps from the carton.
2). Refer to Parts List and Hardware List, and ensure parts and hardware are correct before assembly. Contact customer service for missing parts.
3). Place all wooden parts on a clean, flat and soft surface (e.g. carpet or rug) to prevent scratch and damage to parts.
4). Allow ample room for assembly and assemble the product near where the product will be placed.
5). During assembly, do not over-tighten any fittings as this may cause damage.
6). Always place the product on a flat, level surface.

## 2. CARE AND MAINTENANCE

1). KEEP ALL HARDWARE PARTS OUT OF REACH OF CHILDREN.
2). Wipe clean with a soft, dry cloth; avoid the use of harsh chemicals or household cleaners as they may damage the exterior finish of the furniture.
3). Hardware may loosen over time. Periodically, check that all connections are tight; re-tighten as necessary.

## 3. TIPS TO PROTECT & CARE FOR YOUR FURNITURE

1). Avoid placing your furniture in direct sunlight, as sunlight causes fading.
2). Use a protective pad when writing on the furniture surface.
3). Use cutting boards and trivets for food preparation in order to avoid damaging the top for the unit.

# Plate number

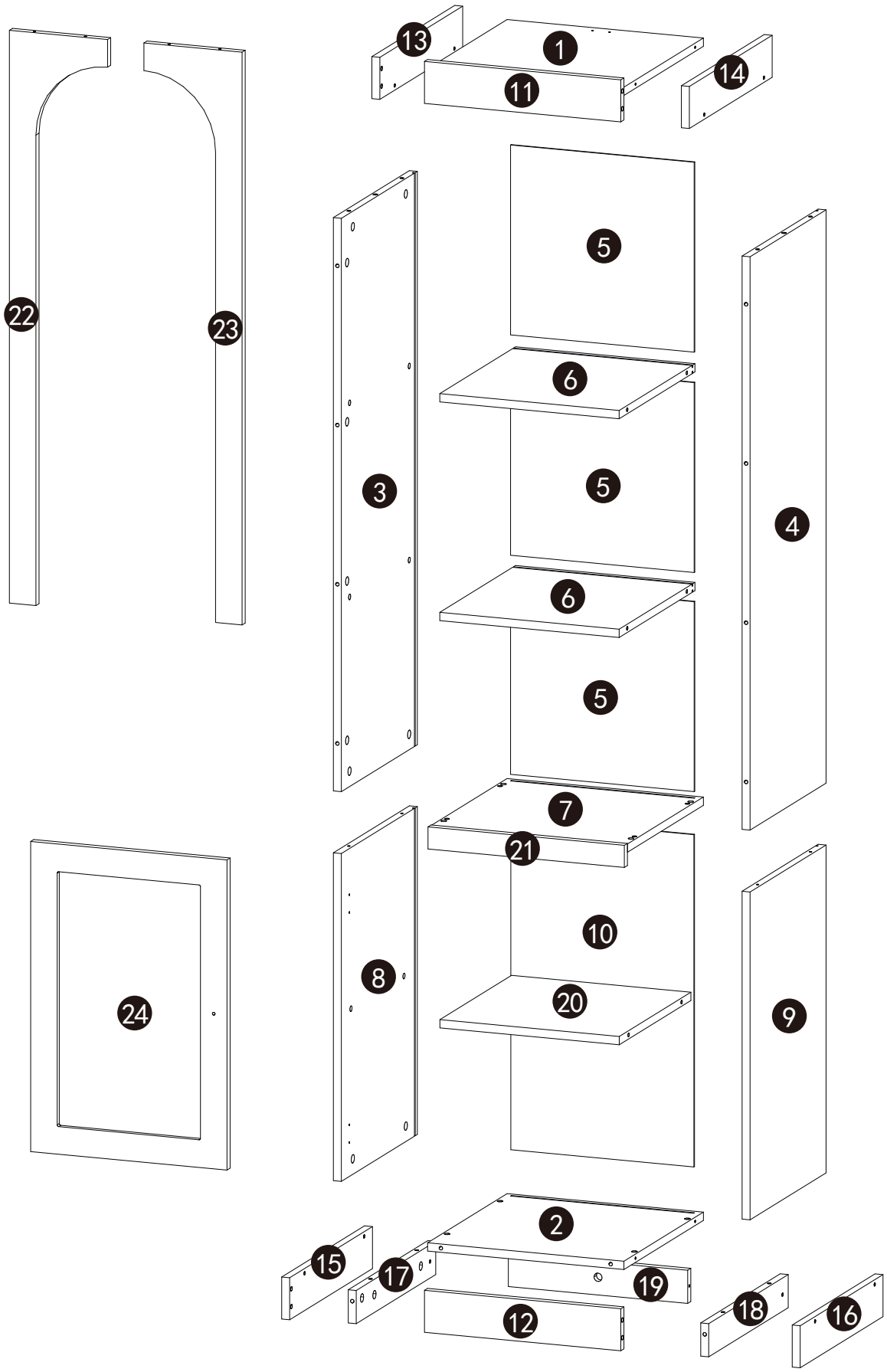

# PARTS LIST

Unit: (mm)

| | | |
|---|---|---|
| **1** x1 PC 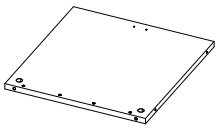 | **10** x1 PC 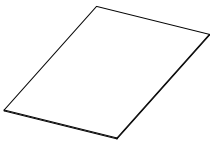 | **19** x1 PC 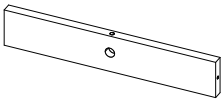 |
| **2** x1 PC 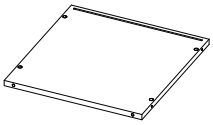 | **11** x1 PC 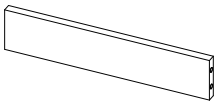 | **20** x1 PC 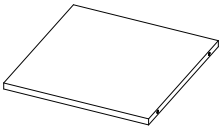 |
| **3** x1 PC 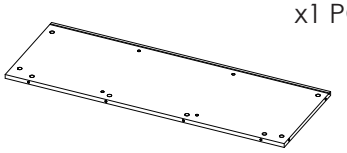 | **12** x1 PC 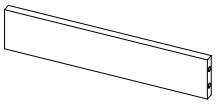 | **21** x1 PC 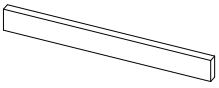 |
| **4** x1 PC 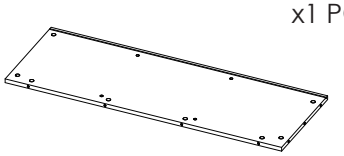 | **13** x1 PC 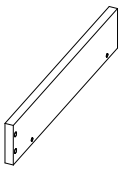 | **22** x1 PC 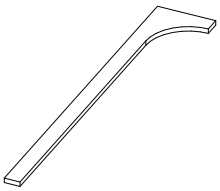 |
| **5** x3 PC 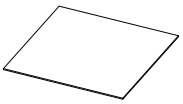 | **14** x1 PC 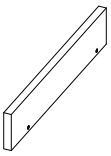 | **23** x1 PC 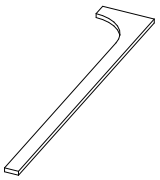 |
| **6** x2 PC 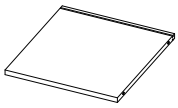 | **15** x1 PC 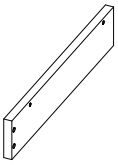 | **24** x1 PC 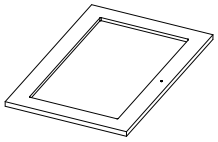 |
| **7** x1 PC 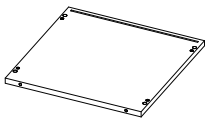 | **16** x1 PC 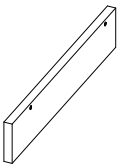 | |
| **8** x1 PC 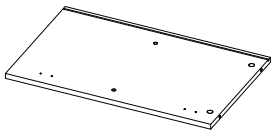 | **17** x1 PC 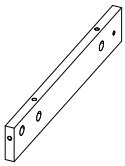 | |
| **9** x1 PC 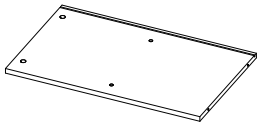 | **18** x1 PC 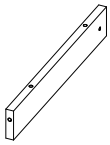 | |

# ACCESSORIES LIST

Unit: (mm)

| | | |
|---|---|---|
| **A** 6x35<br> 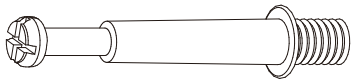 <br>x45 PC | **B** 15x10<br> 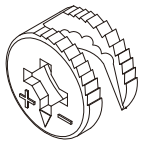 <br>x45 PC | **C** Hinge<br> 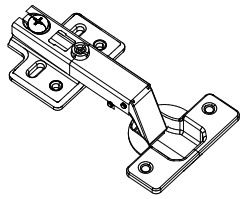 <br>x2 PC |
| **D** 8x40<br> 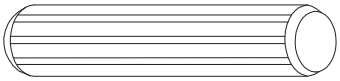 <br>x10 PC | **E** M3.5x14<br> 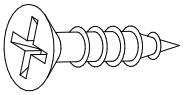 <br>x12 PC | **F** M5x40/#3<br> 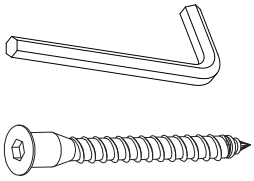 <br>x18 PC/x1 PC |
| **G**<br> 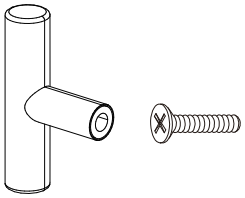 <br>x1 PC | **H** 21mm<br> 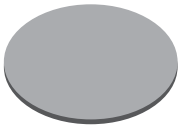 <br>x32 pc | **J**<br> 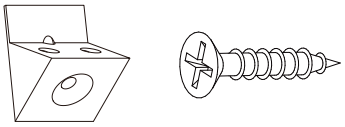 <br>x18 PC/x18 PC |
| **K**<br> 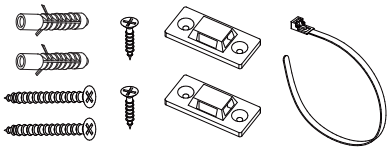 <br>x1 PC | | |
| | | |

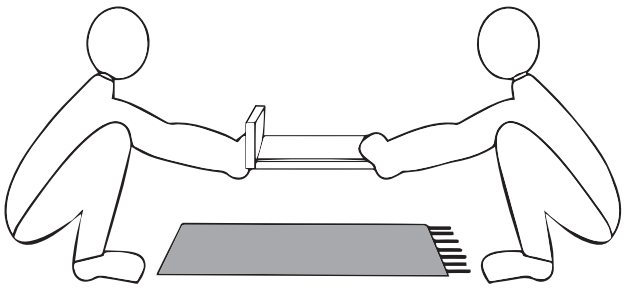

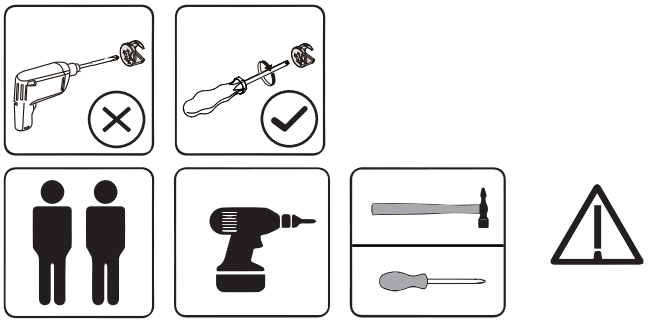

# INSTALLATION INSTRUCTION

## STEP1

| YOU WILL NEED | | | | | |
|---|---|---|---|---|---|
| A | | x2 | B | | x2 |

Installation method of three in one rod and buckle

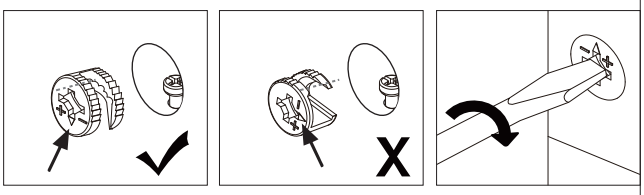

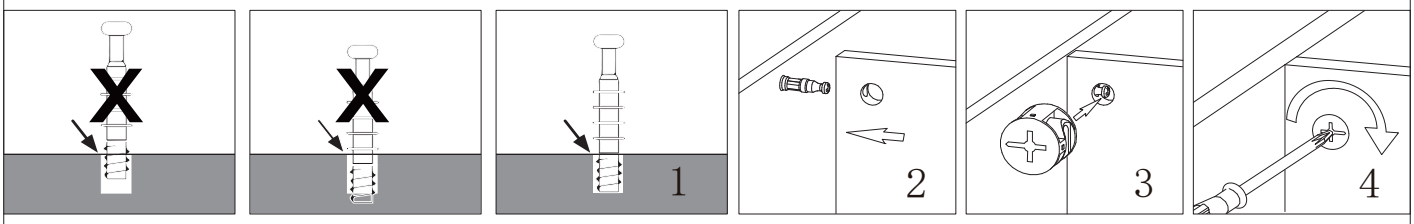


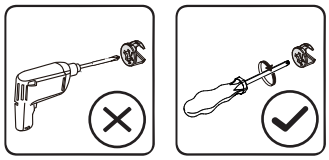

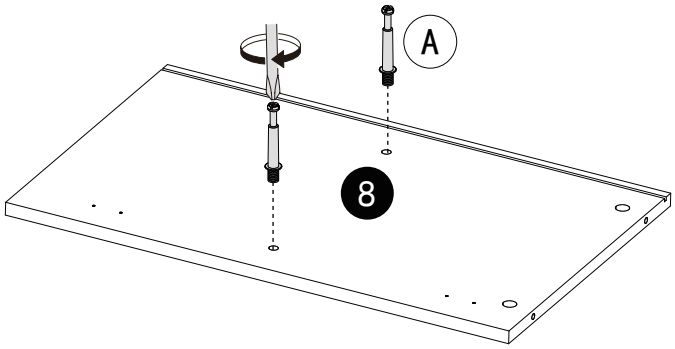

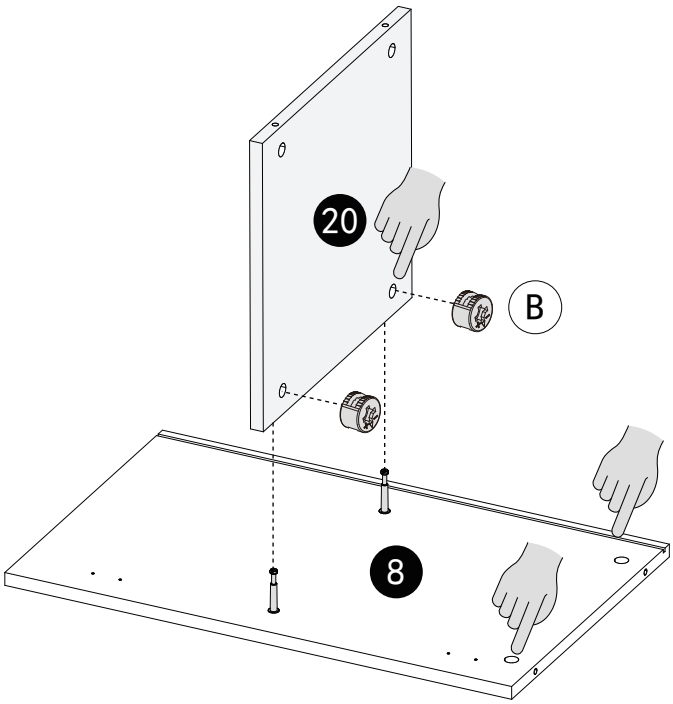

## STEP2

| YOU WILL NEED | | | | | |
|---|---|---|---|---|---|
| A | | x2 | B | | x2 |

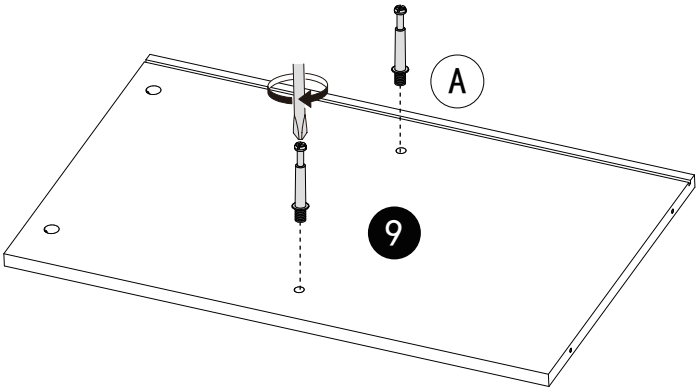


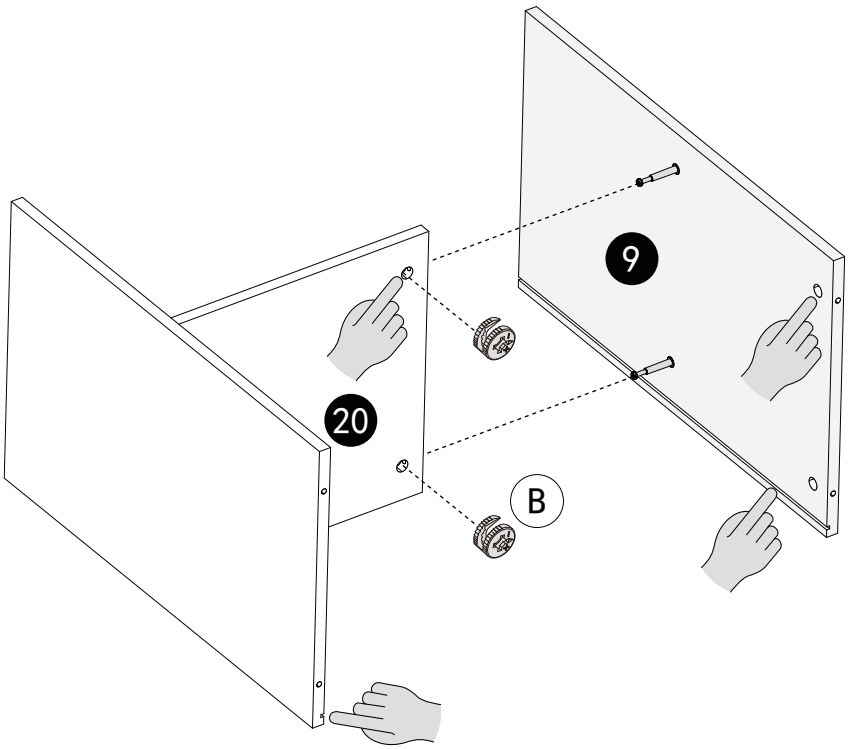

## STEP3

| YOU WILL NEED | | | | | |
|---|---|---|---|---|---|
| F | | x2 | | | |

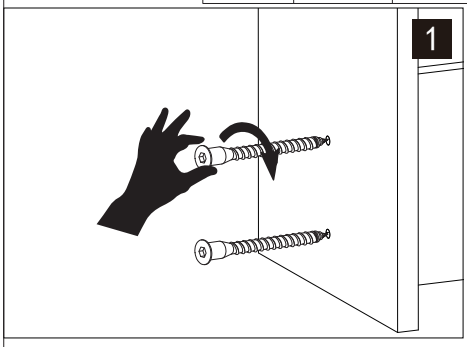


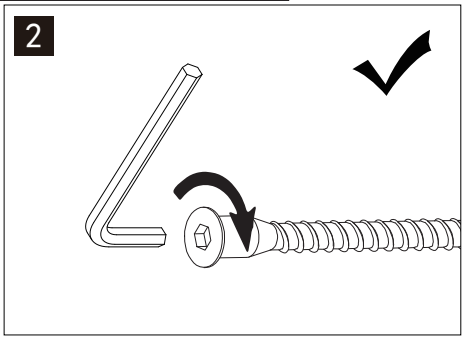


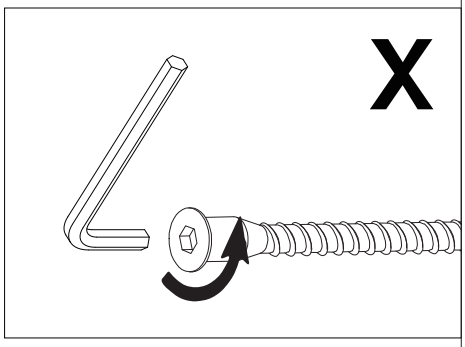

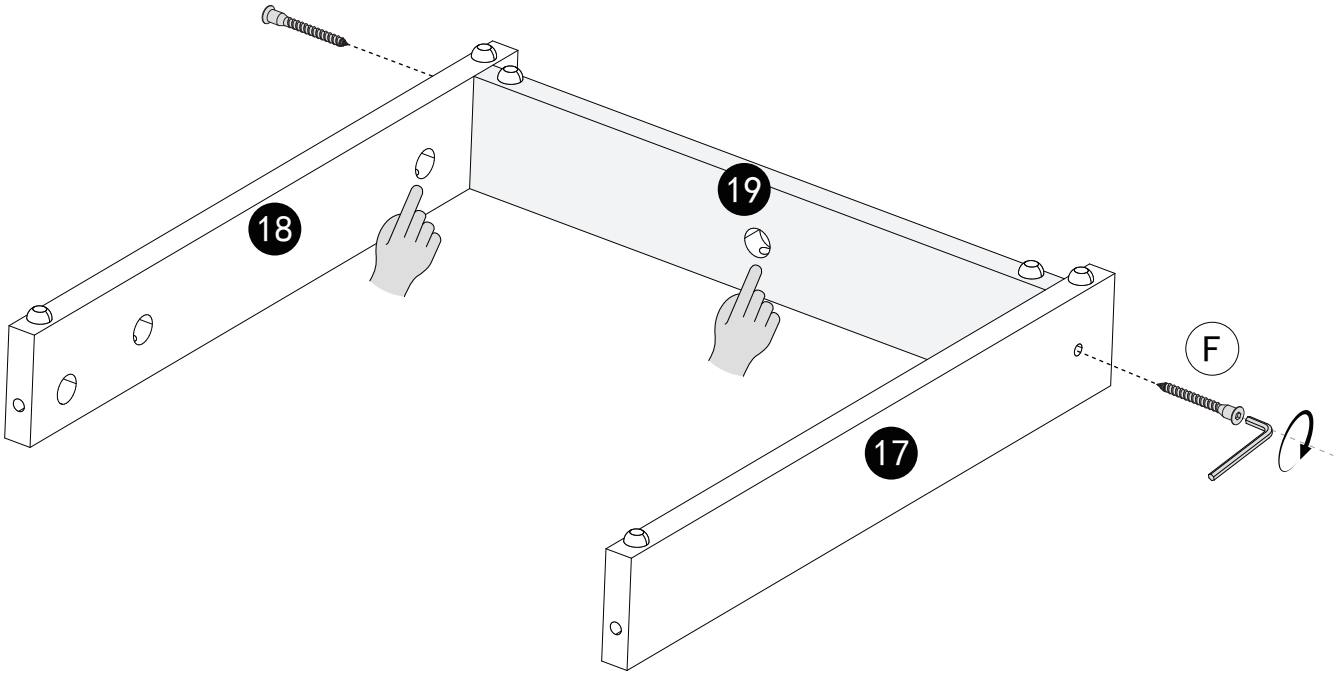

## STEP4

| YOU WILL NEED | | | | | |
|---|---|---|---|---|---|
| A | | x5 | B | | x5 |

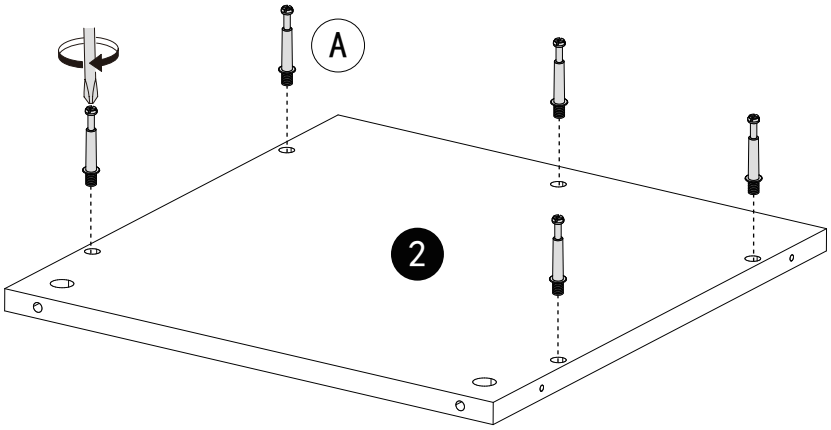


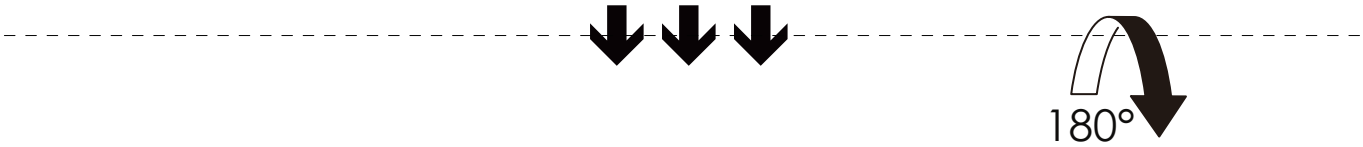


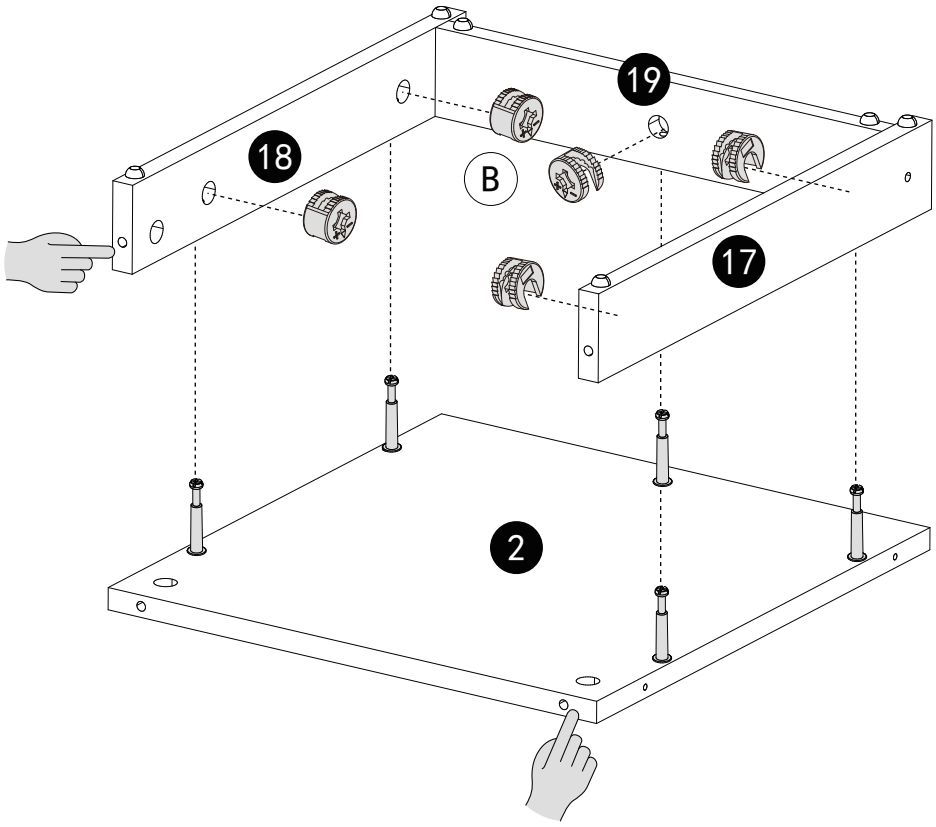

## STEP5

| YOU WILL NEED | | | | | |
|---|---|---|---|---|---|
| A | | x4 | B | | x4 |

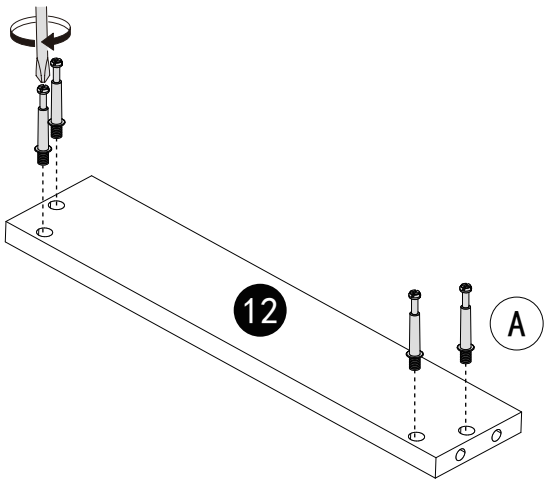


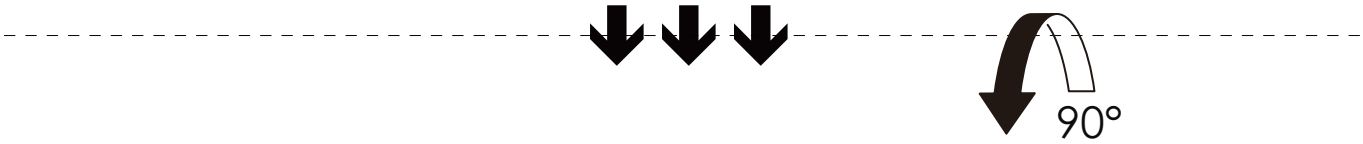


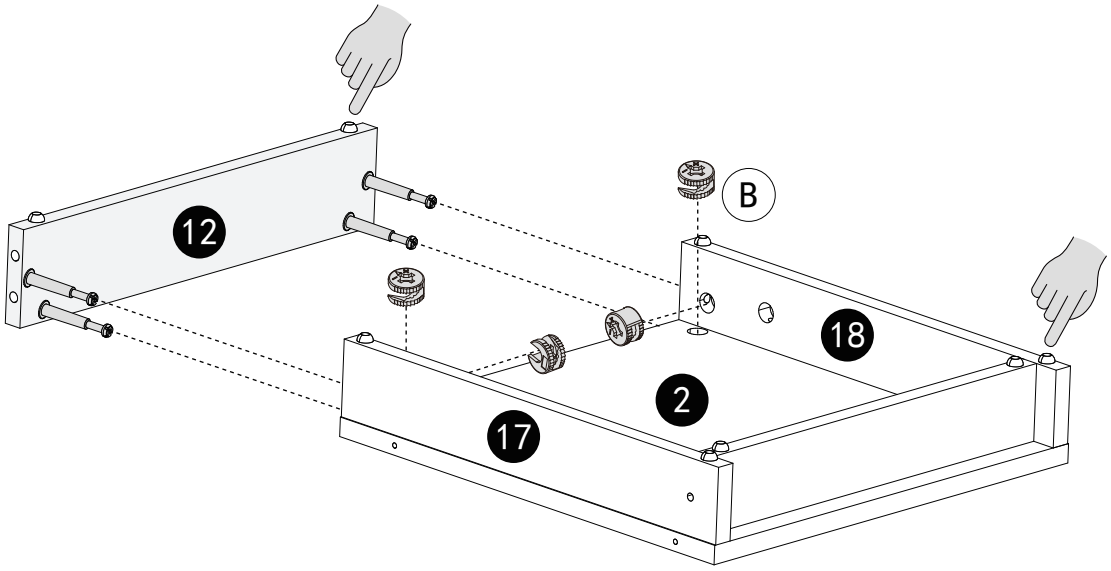

## STEP6

| YOU WILL NEED | | | | | |
|---|---|---|---|---|---|
| A | | x4 | B | | x4 |

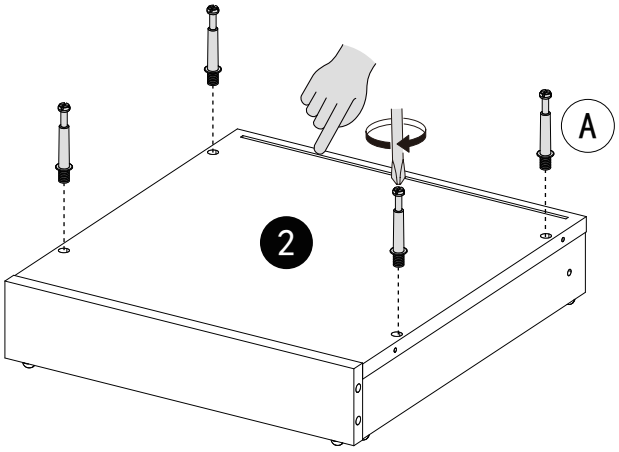


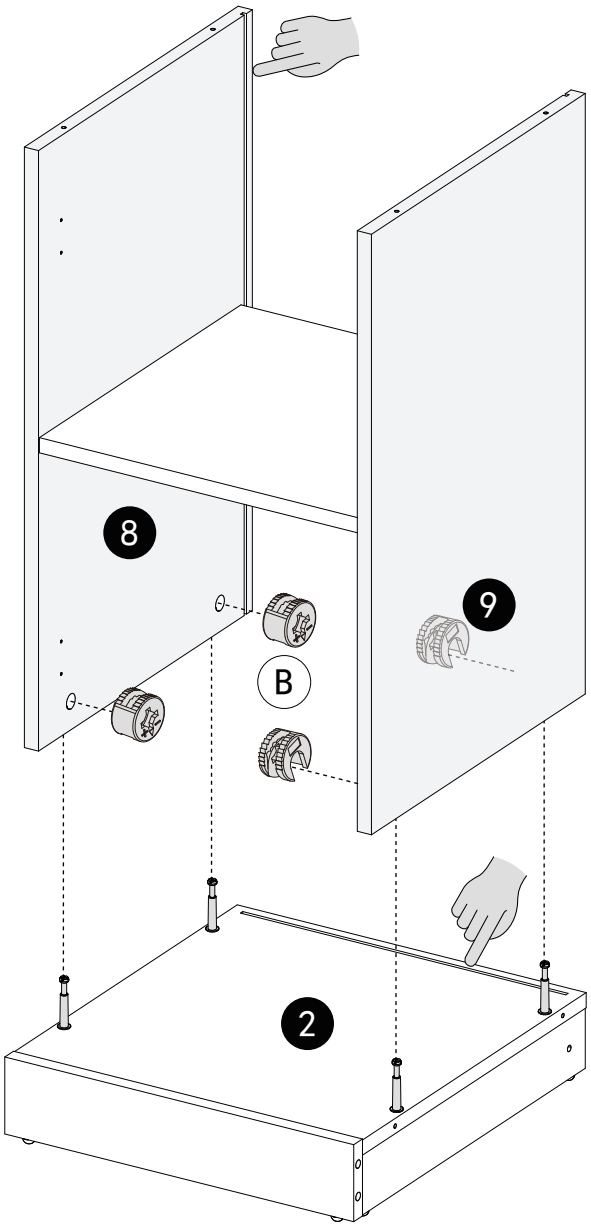

## STEP7

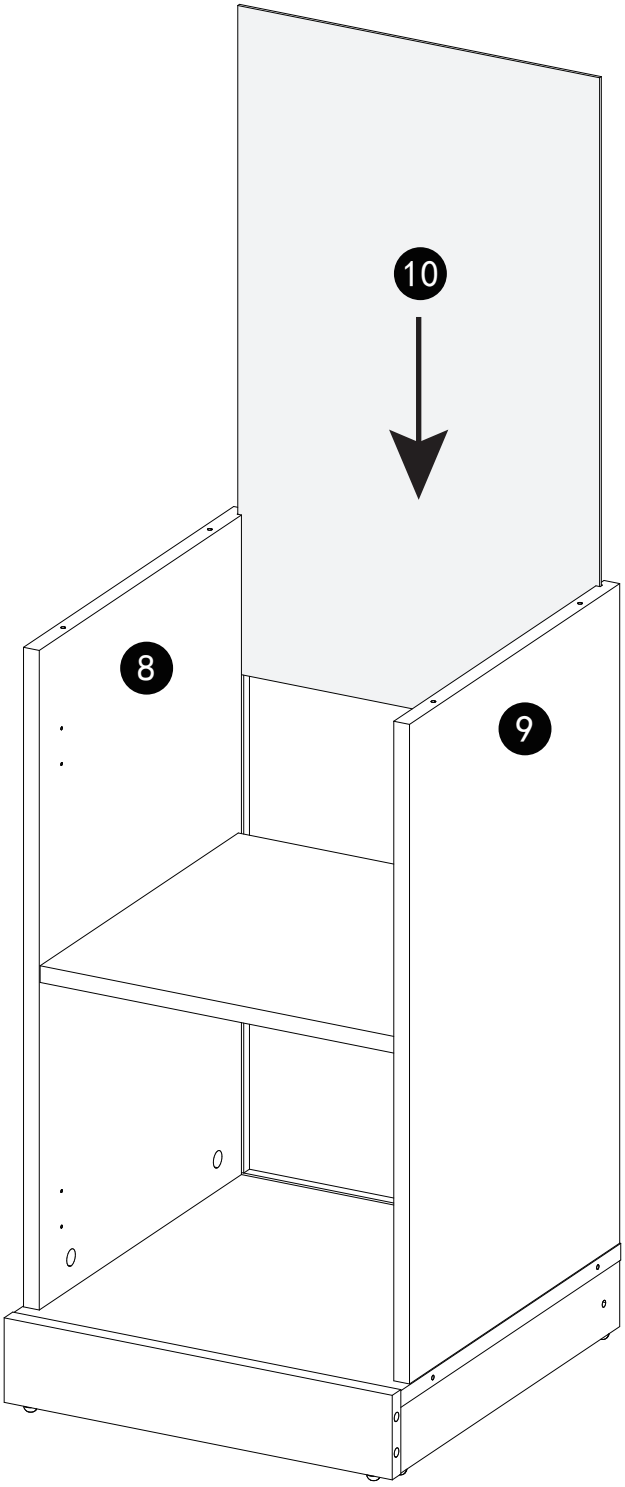

## STEP8

| YOU WILL NEED | | | | | |
|---|---|---|---|---|---|
| A | | x2 | B | | x2 |

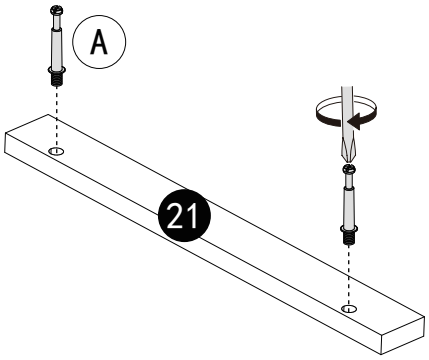


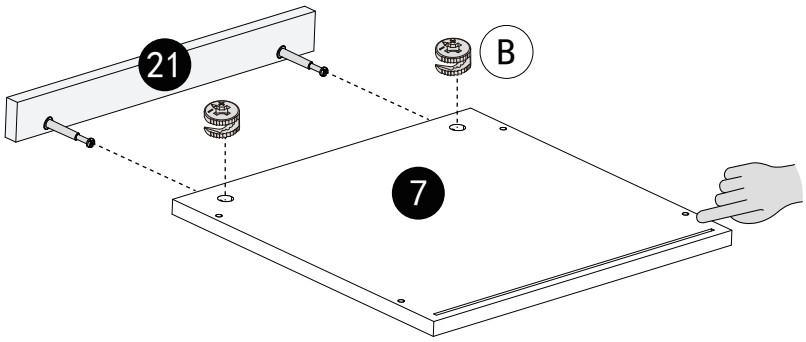


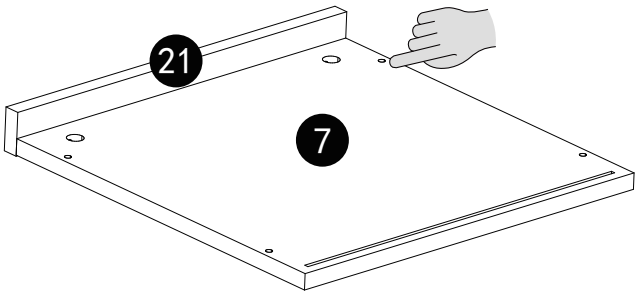

## STEP9

| YOU WILL NEED | | |
|---|---|---|
| F | | x4 |

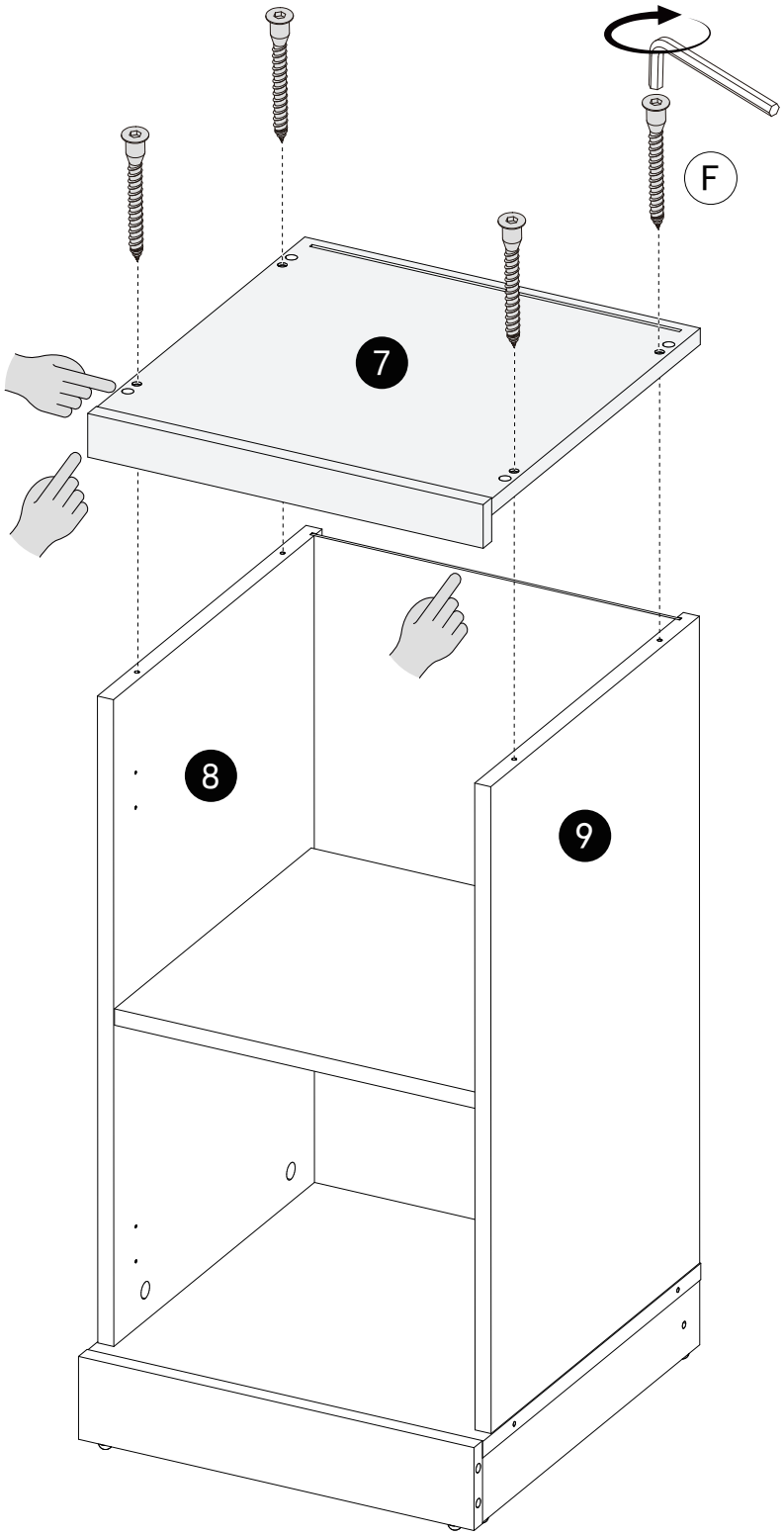

## STEP10

| YOU WILL NEED | | | | | |
|---|---|---|---|---|---|
| A | | x4 | | | |

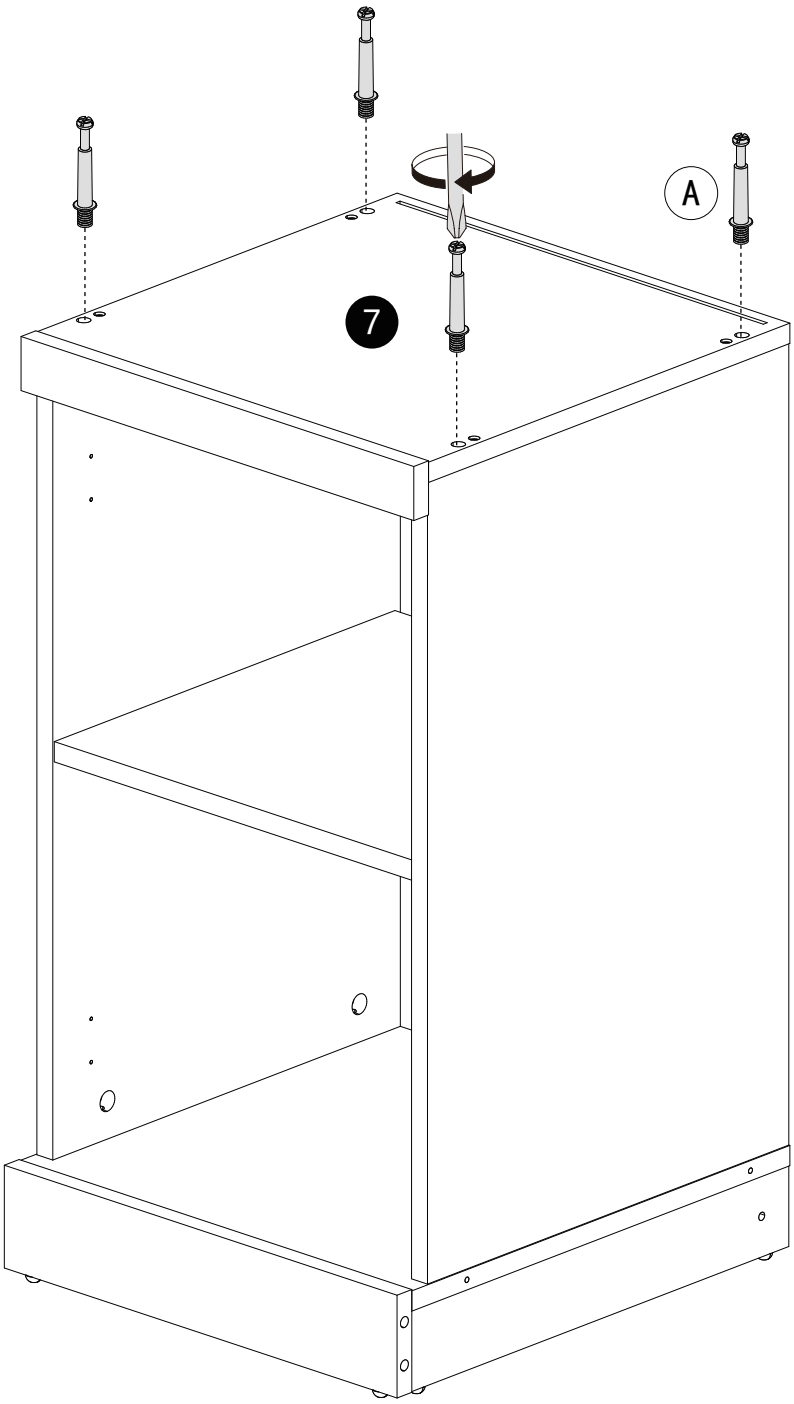

## STEP11

| YOU WILL NEED | | | | | |
|---|---|---|---|---|---|
| A | | x4 | B | | x4 |

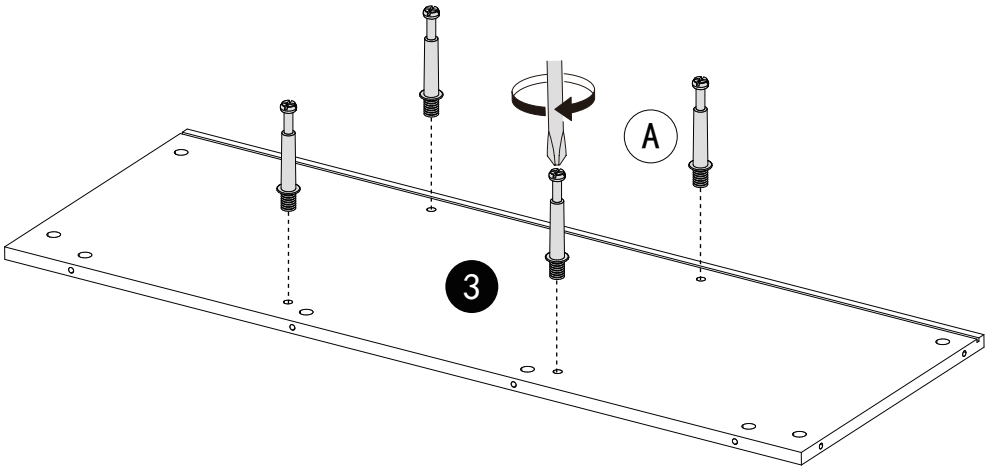


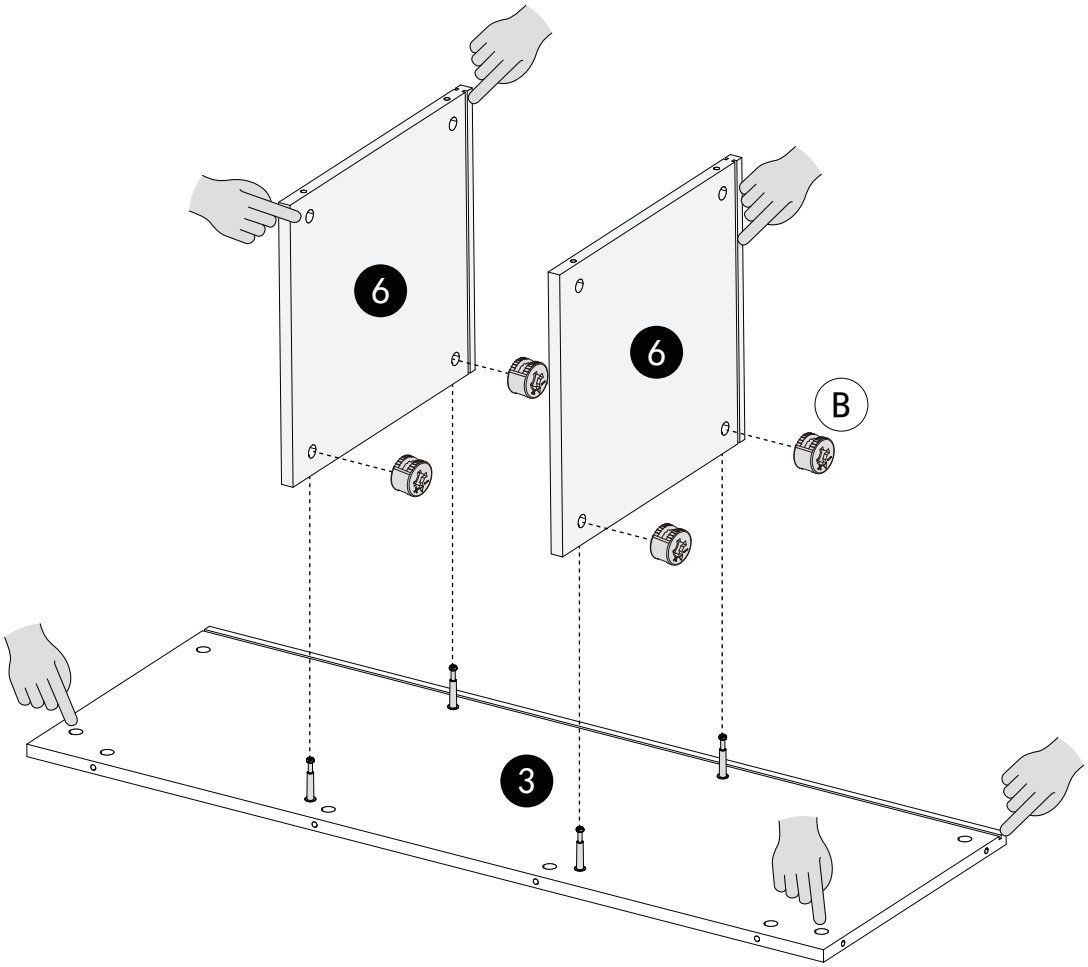

## STEP12

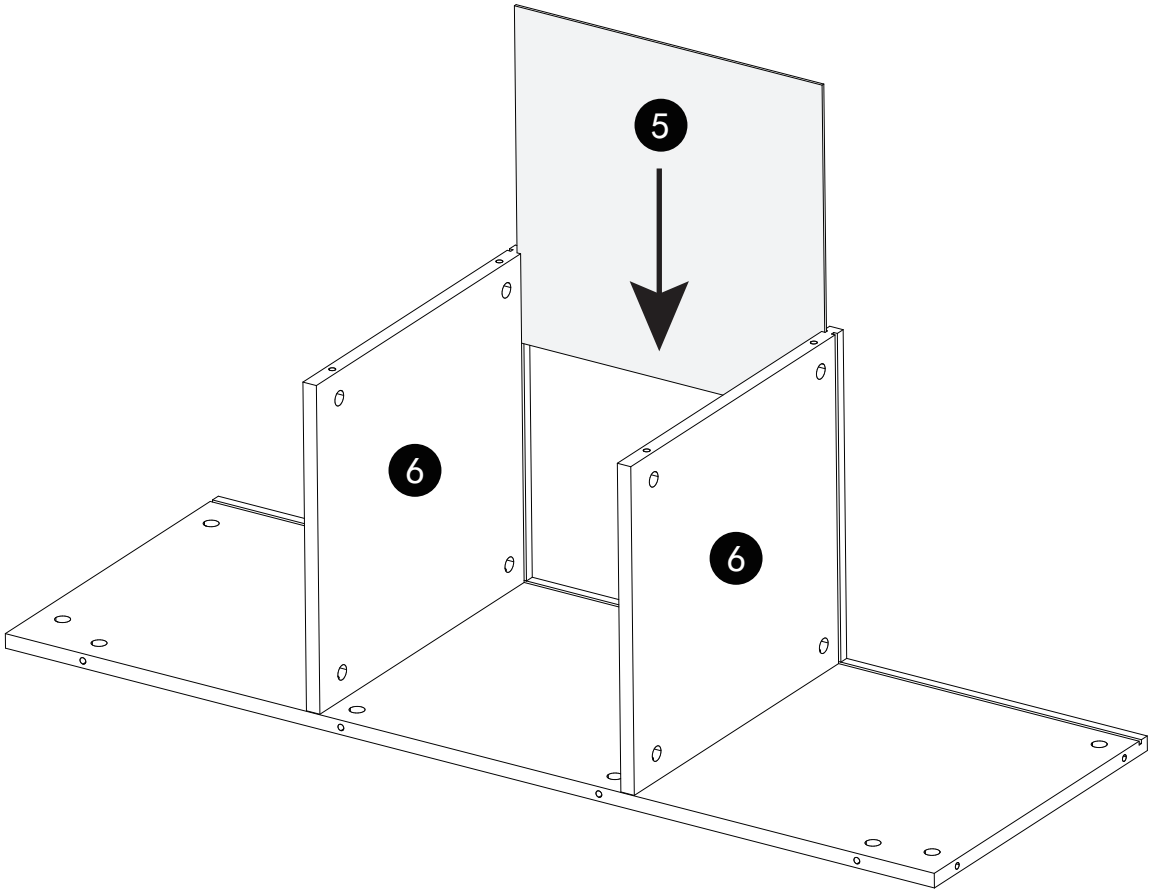


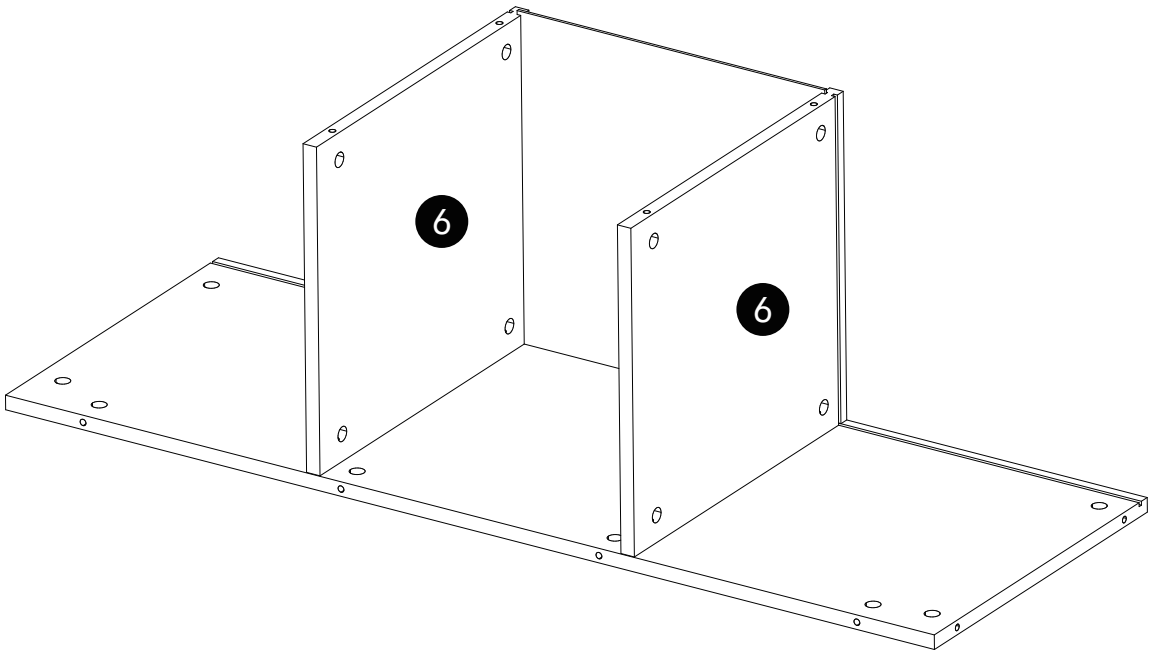

## STEP13

| YOU WILL NEED | | | | | |
|---|---|---|---|---|---|
| A | | x4 | B | | x4 |

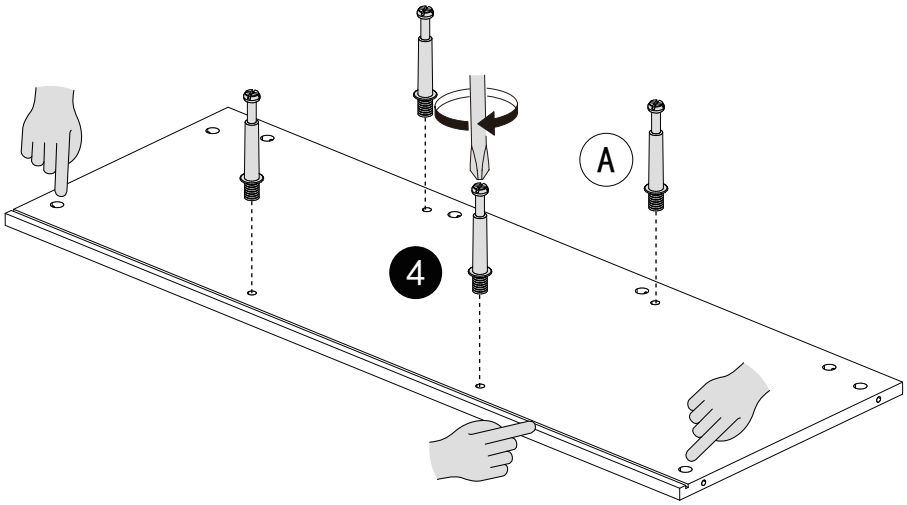


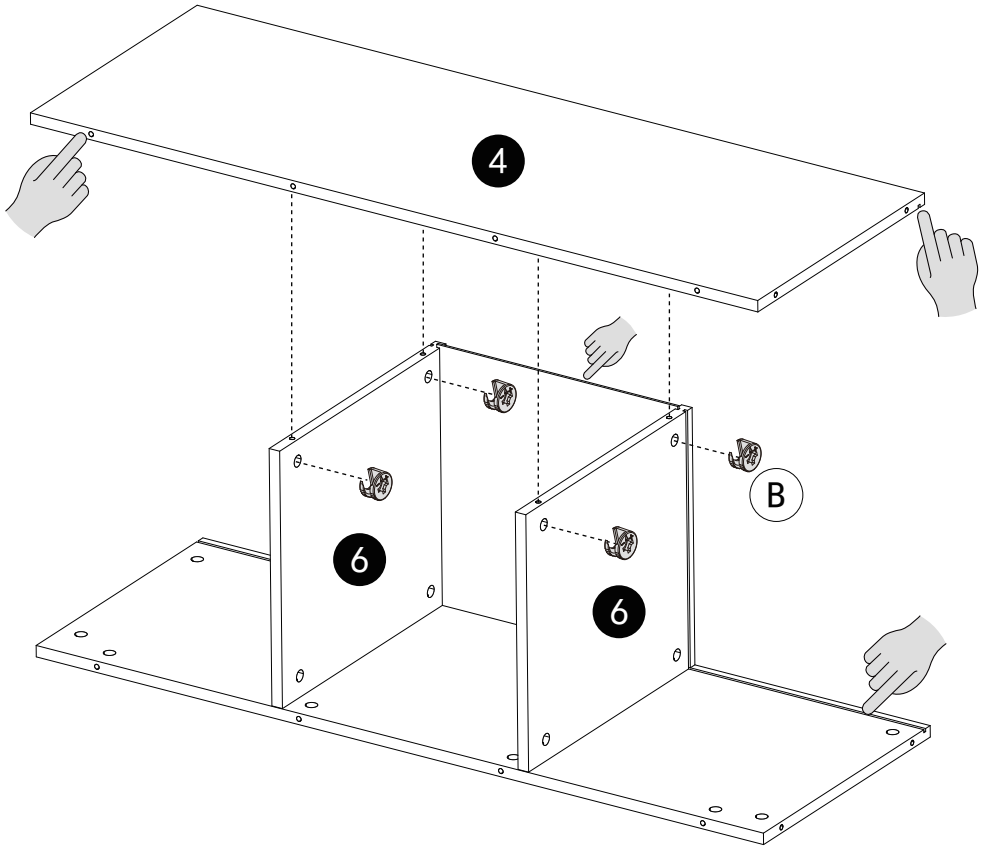

## STEP14

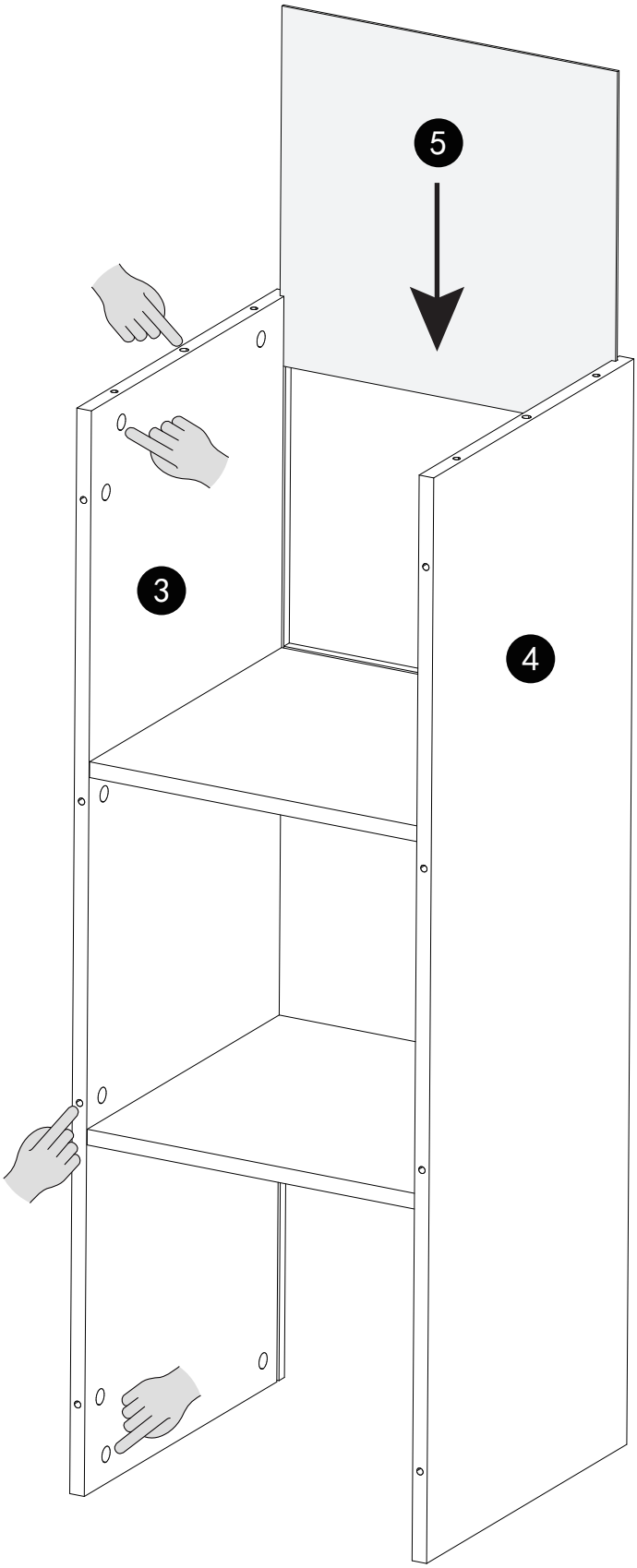

## STEP15

| YOU WILL NEED | | | | | |
|---|---|---|---|---|---|
| D | | x2 | | | |

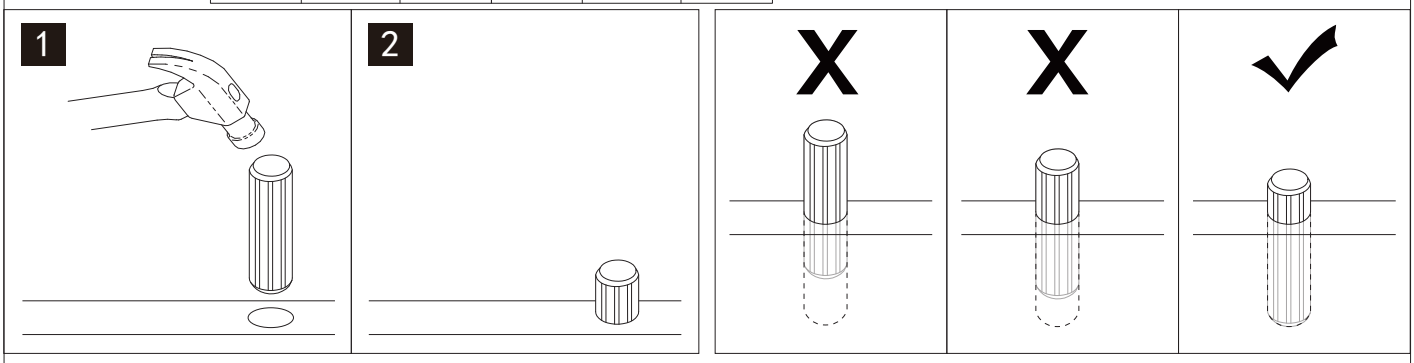


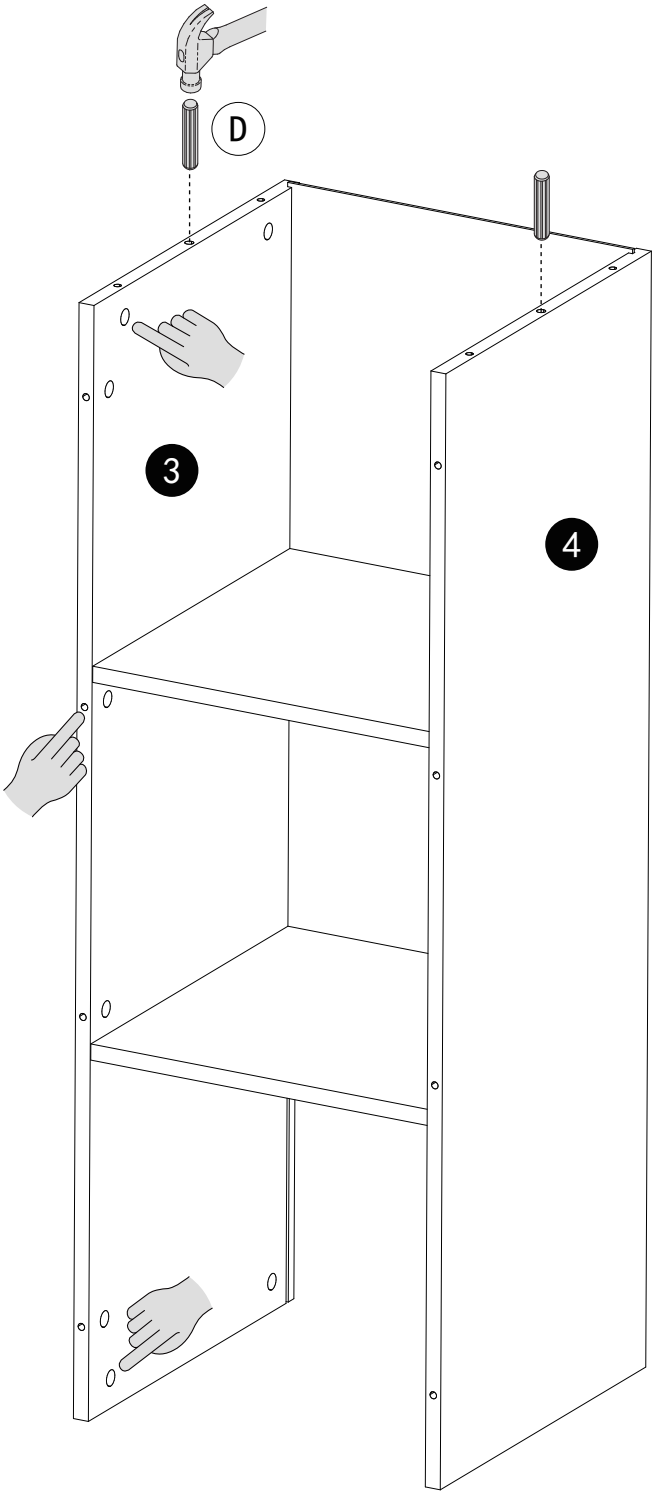

## STEP16

| YOU WILL NEED | | | | | |
|---|---|---|---|---|---|
| A | | x4 | B | | x4 |

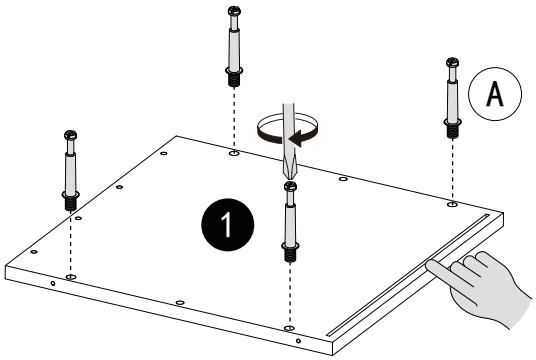


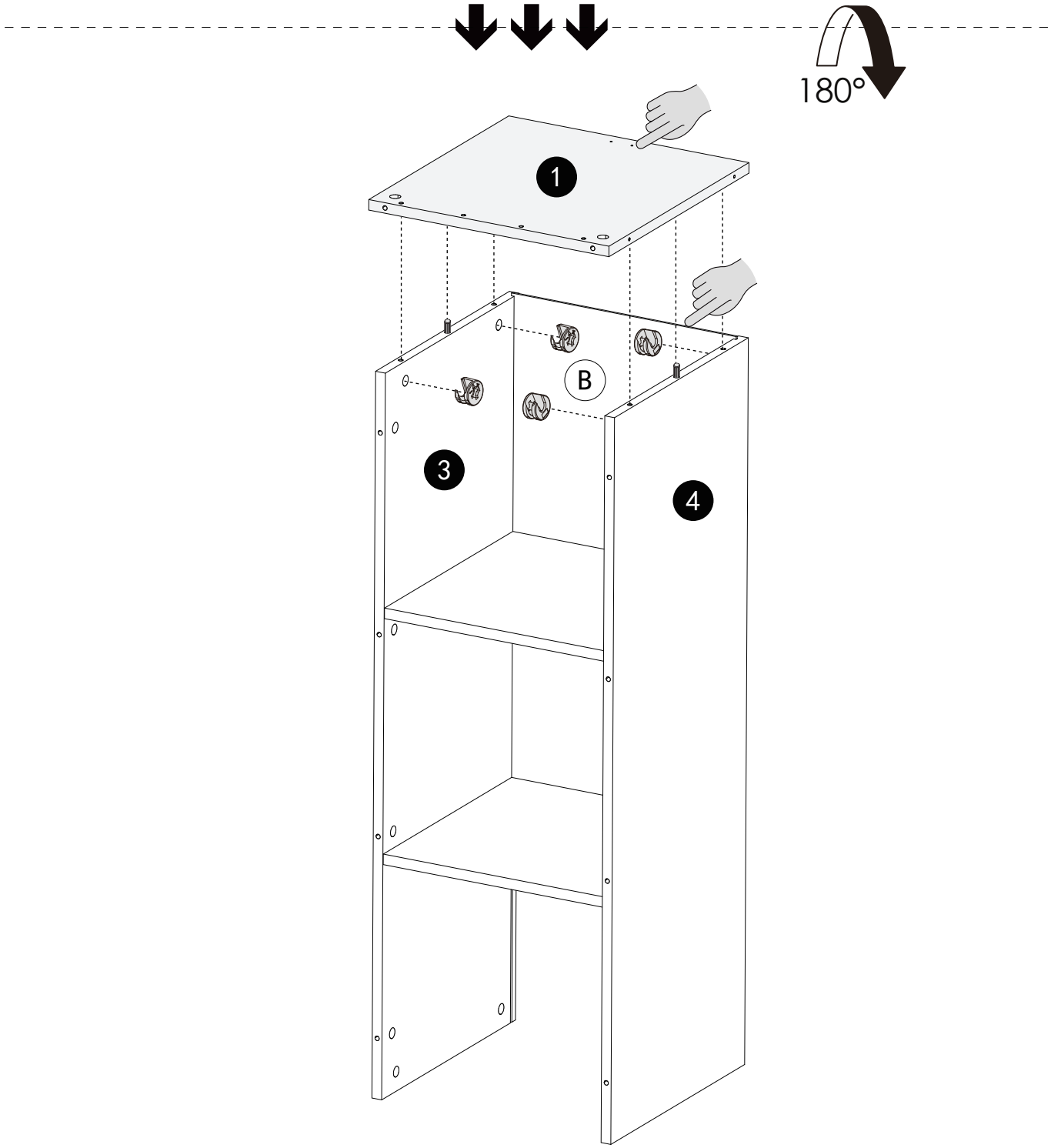

## STEP17

| YOU WILL NEED | | | | | |
|---|---|---|---|---|---|
| A | | x8 | | | |

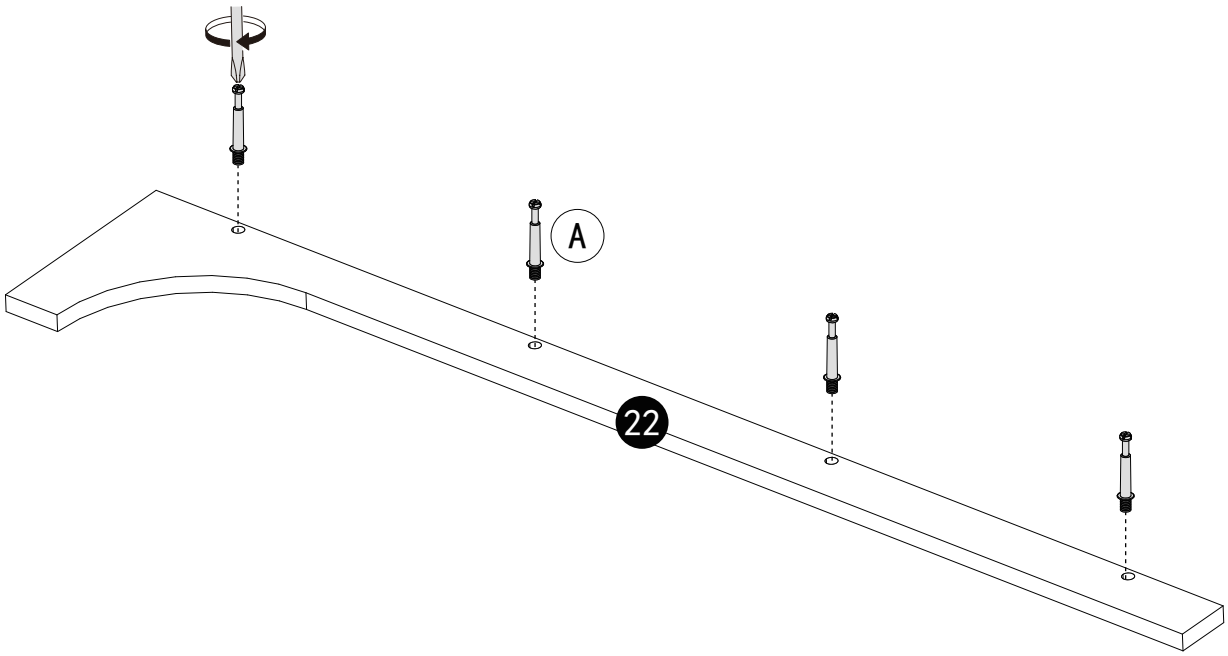


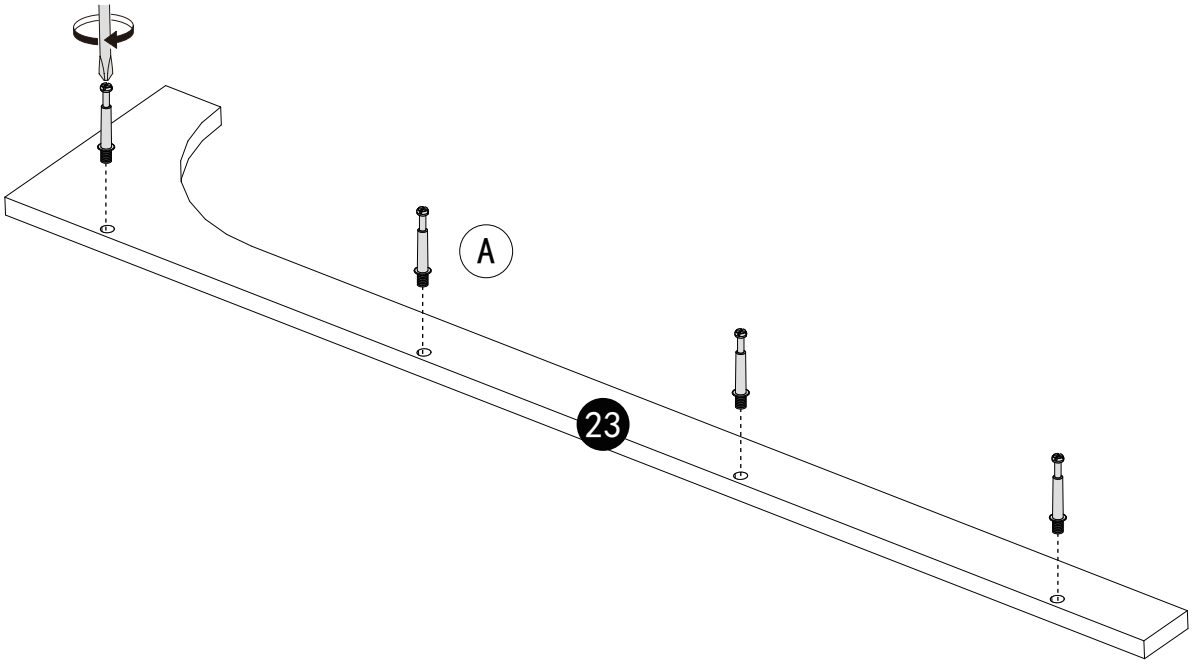

## STEP18

| YOU WILL NEED | | | | | |
|---|---|---|---|---|---|
| B | | x8 | | | |

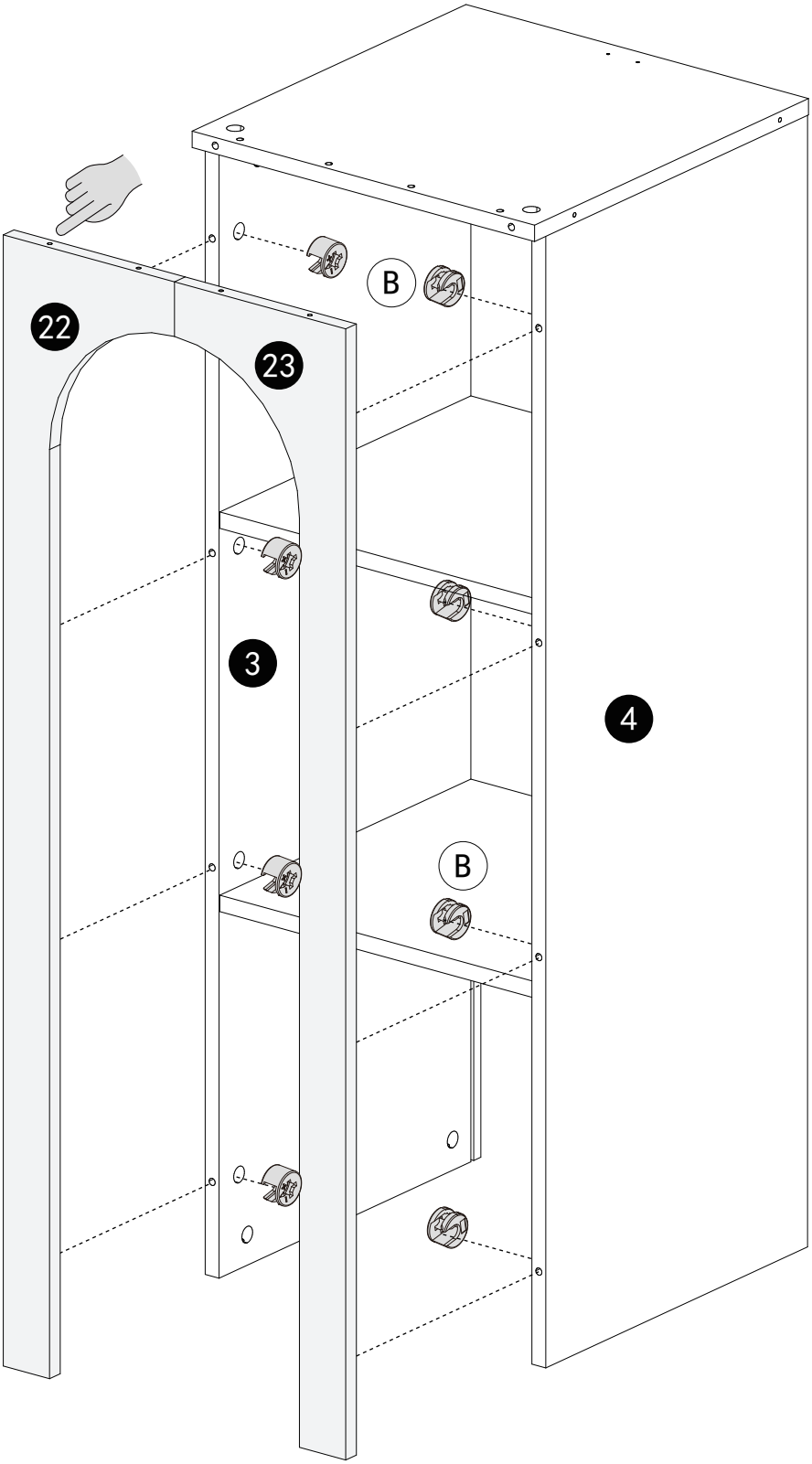

## STEP19

| YOU WILL NEED | | |
|---|---|---|
| F | | x4 |

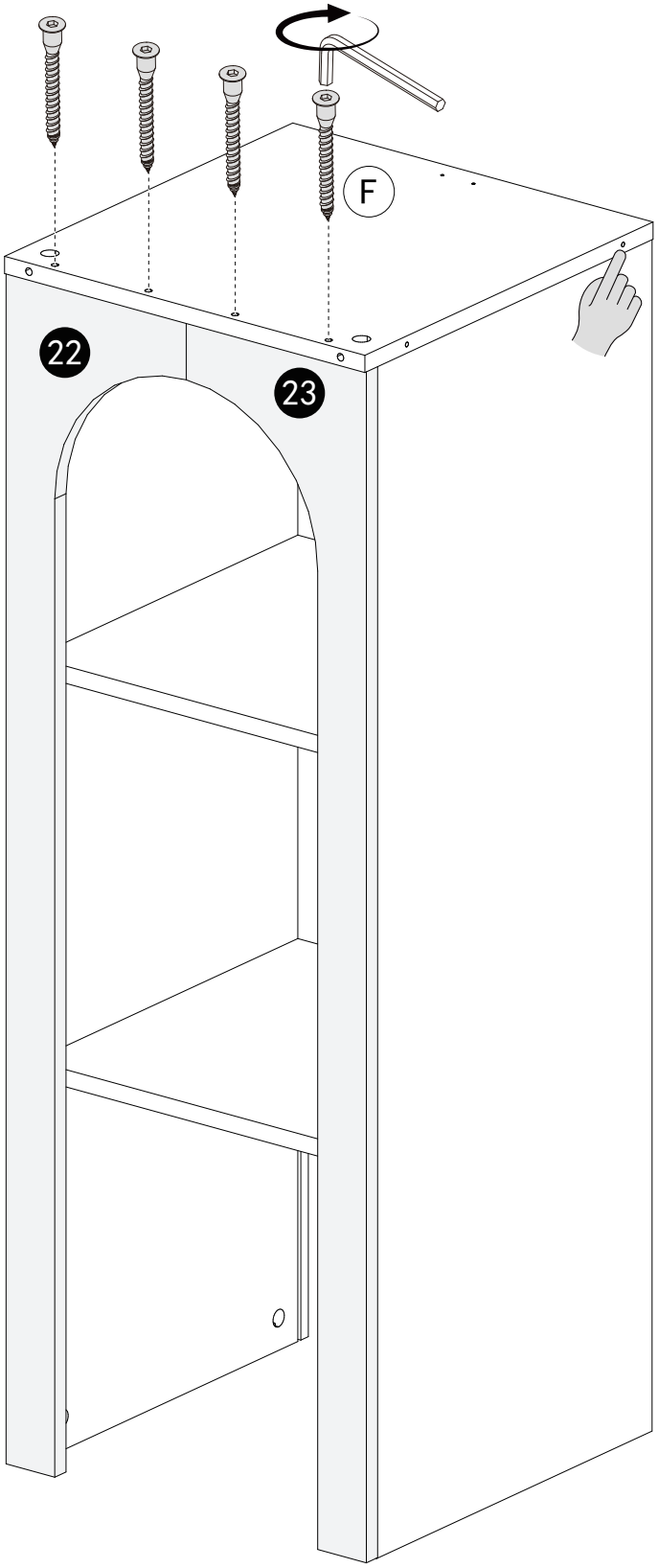

## STEP20

| YOU WILL NEED | | | | | |
|---|---|---|---|---|---|
| A | | x2 | B | | x2 |

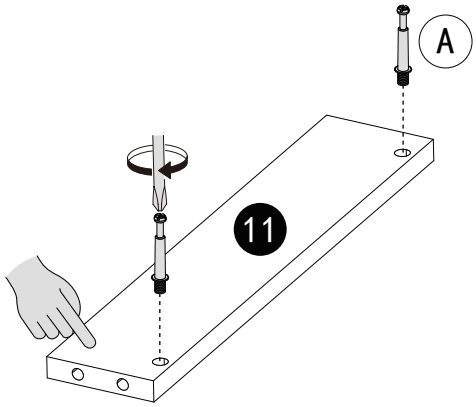


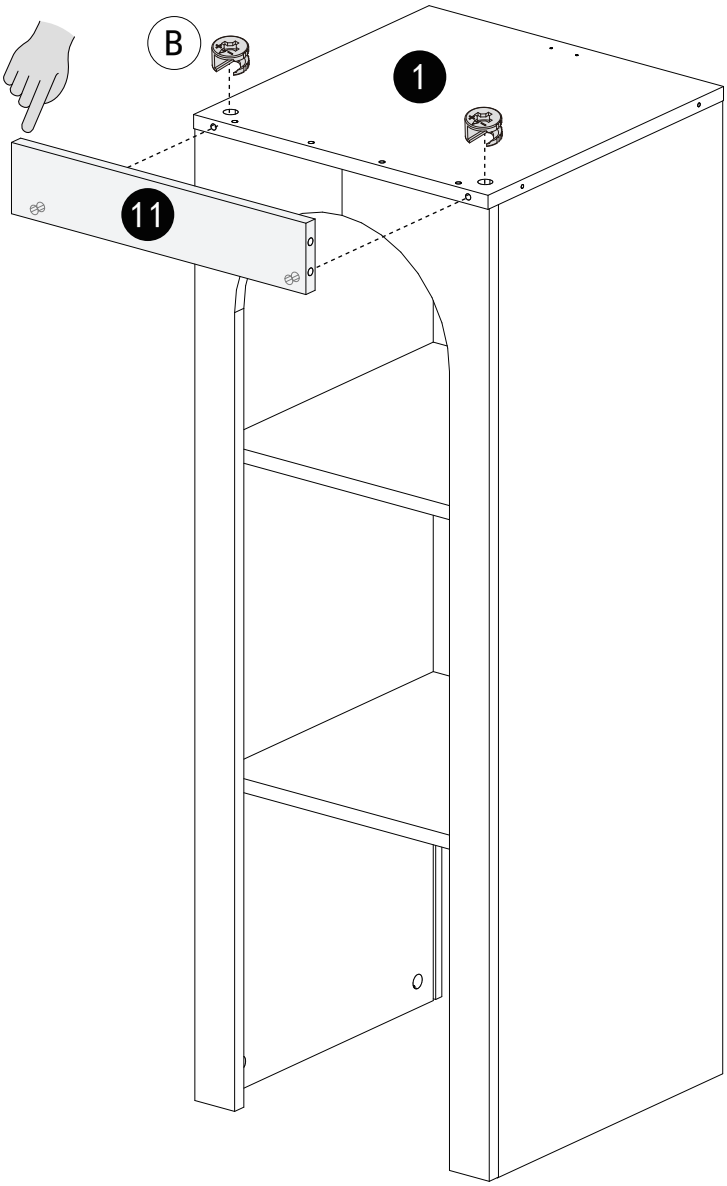

## STEP21

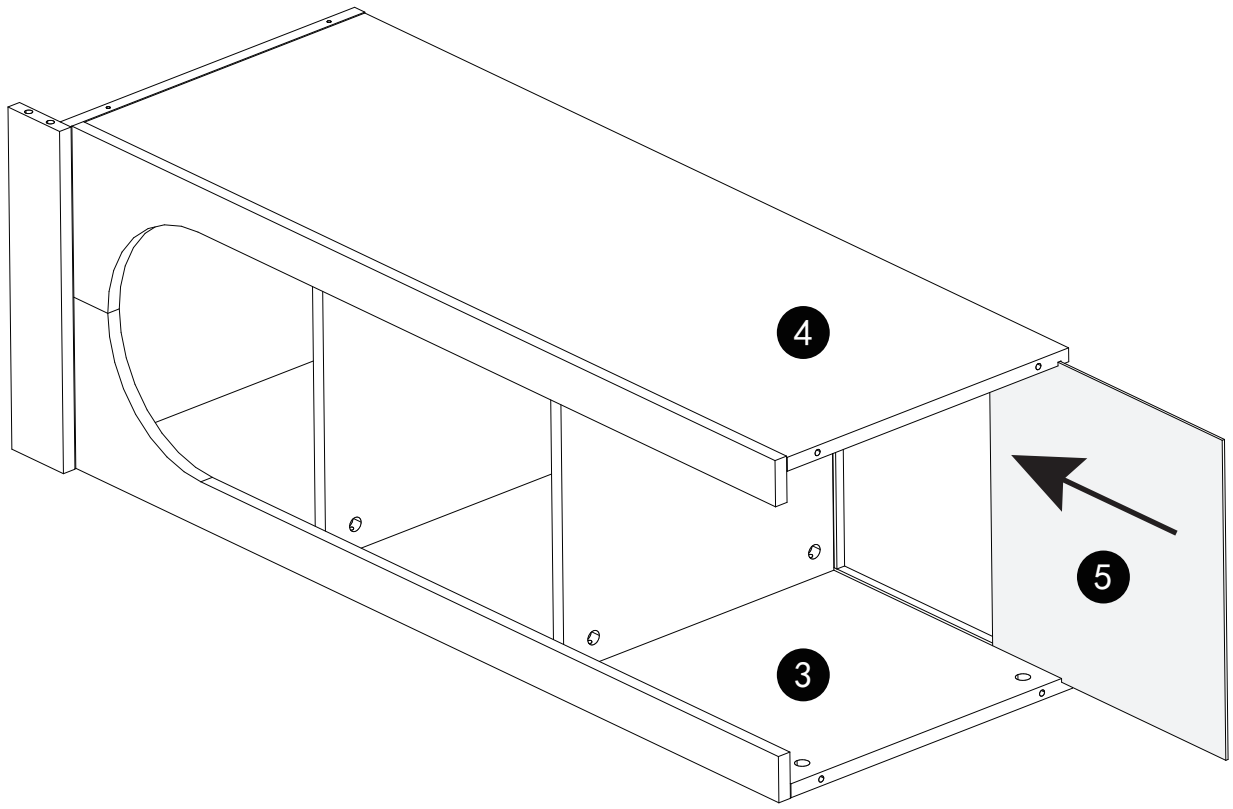

## STEP22

| YOU WILL NEED | | | | | |
|---|---|---|---|---|---|
| B | | x4 | | | |

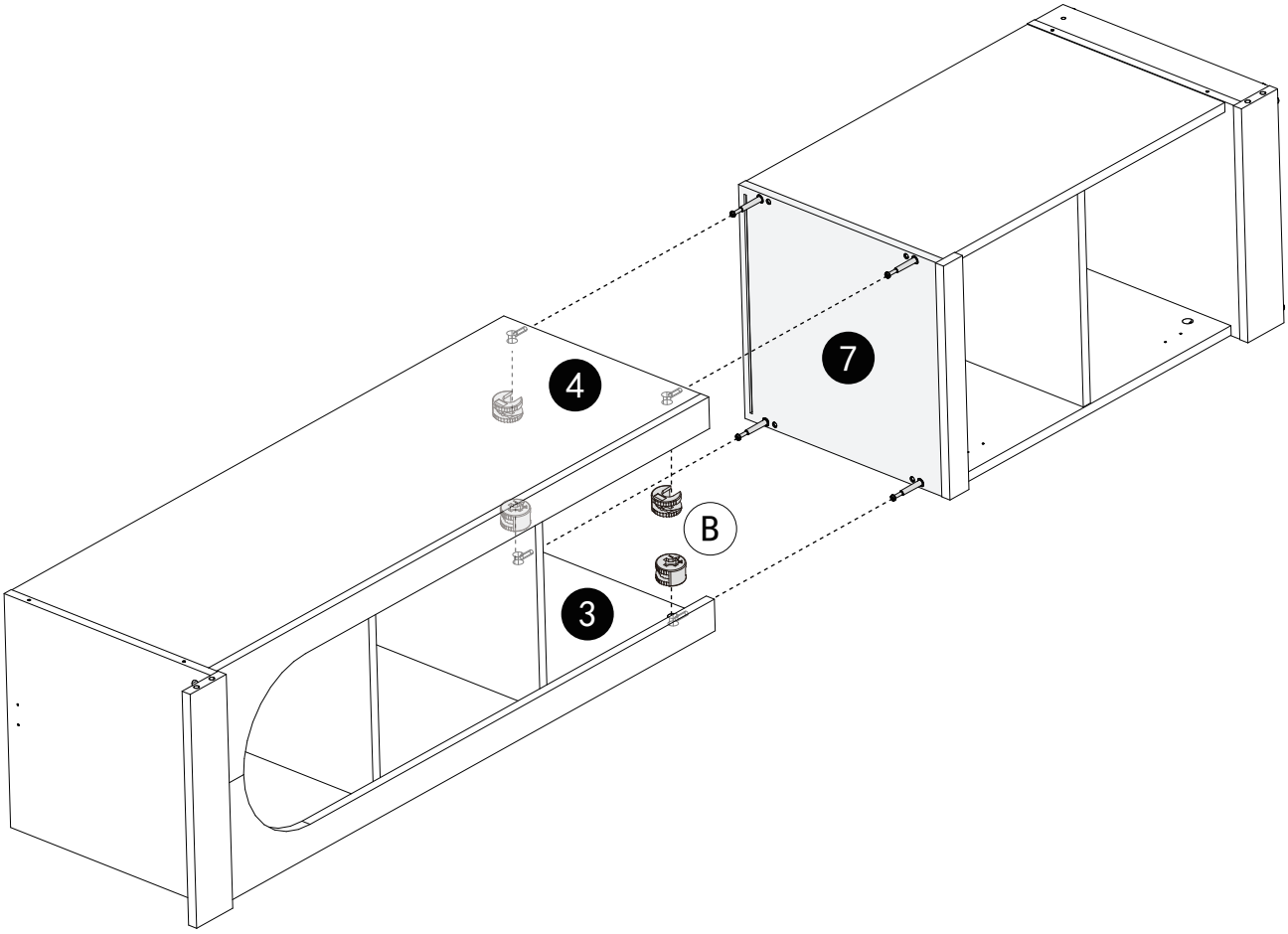

## STEP23

| YOU WILL NEED | | |
|---|---|---|
| J | | x18 |

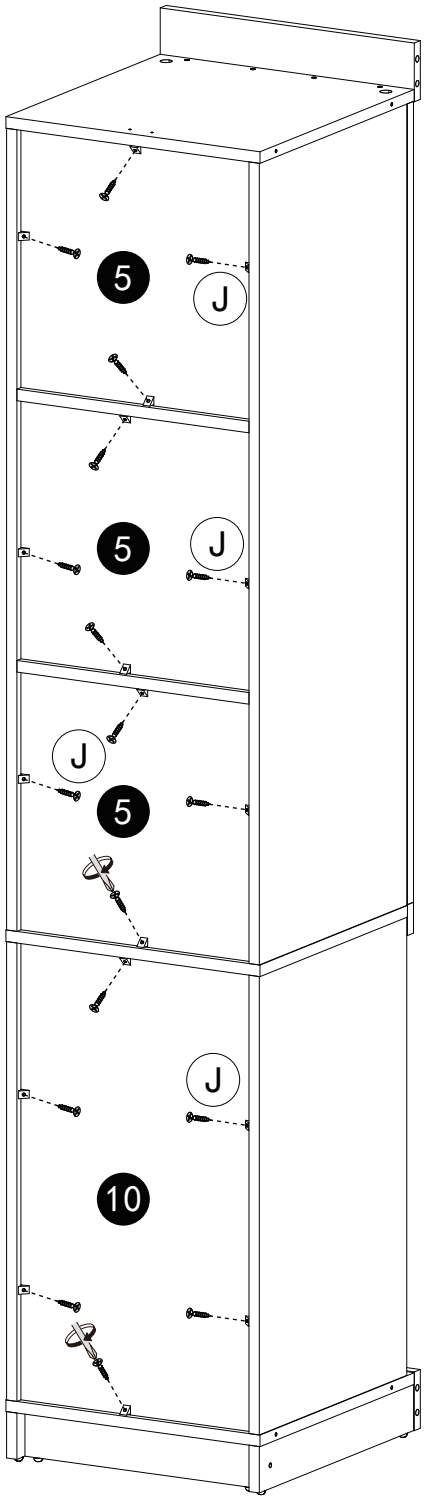


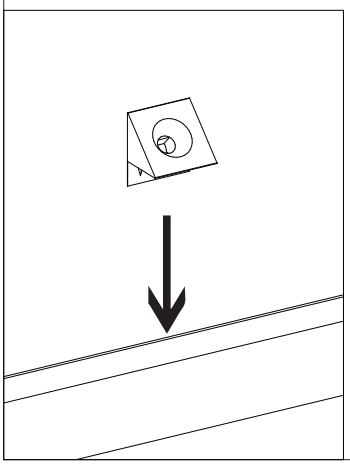

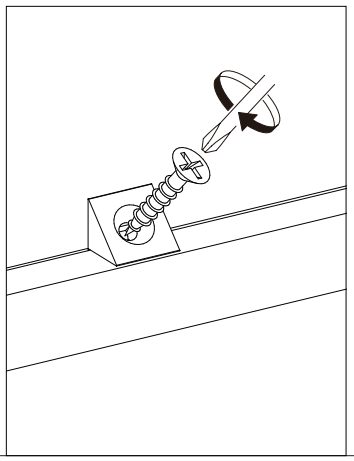

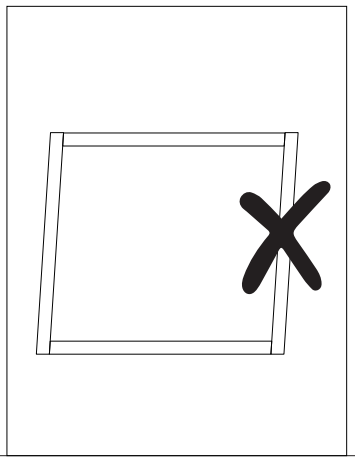

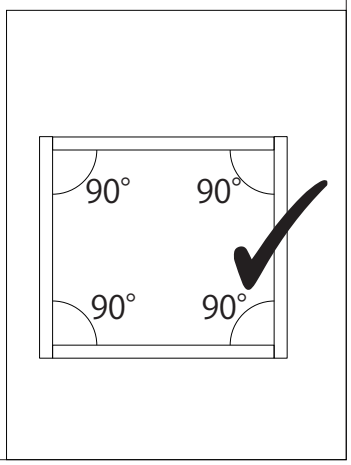

## STEP24

| YOU WILL NEED | | | | | |
|---|---|---|---|---|---|
| D | | x8 | | | |

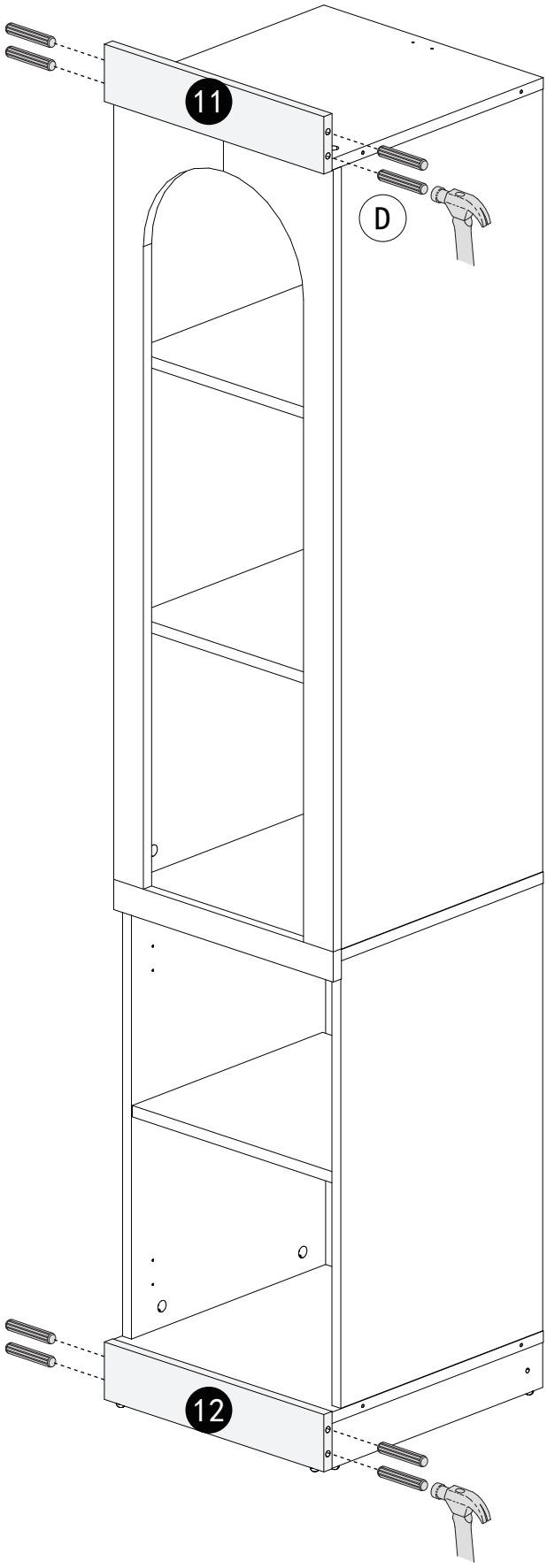

## STEP25

| YOU WILL NEED | | |
|---|---|---|
| F | | x4 |

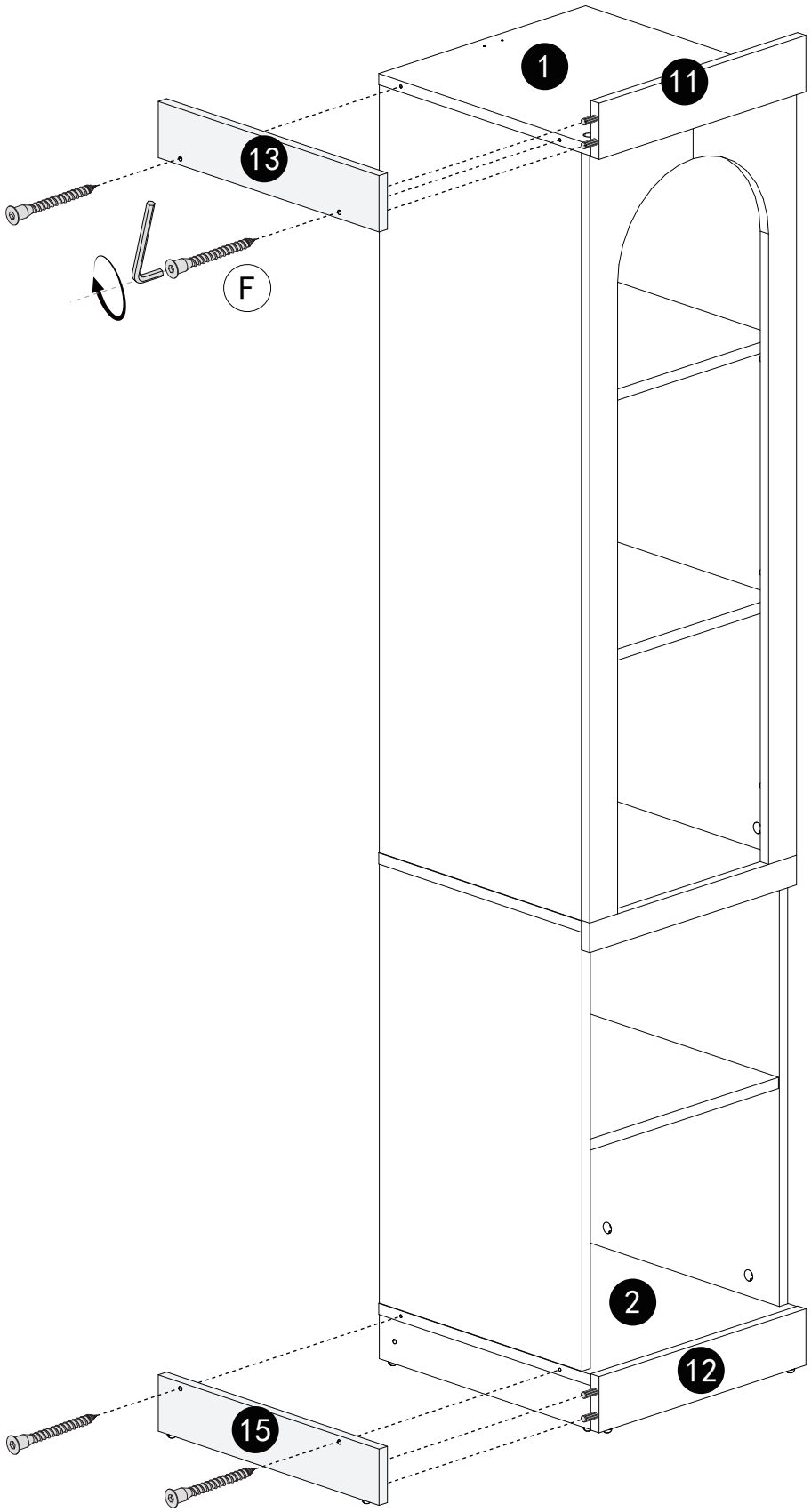

## STEP26

| YOU WILL NEED | | |
|---|---|---|
| F | | x4 |

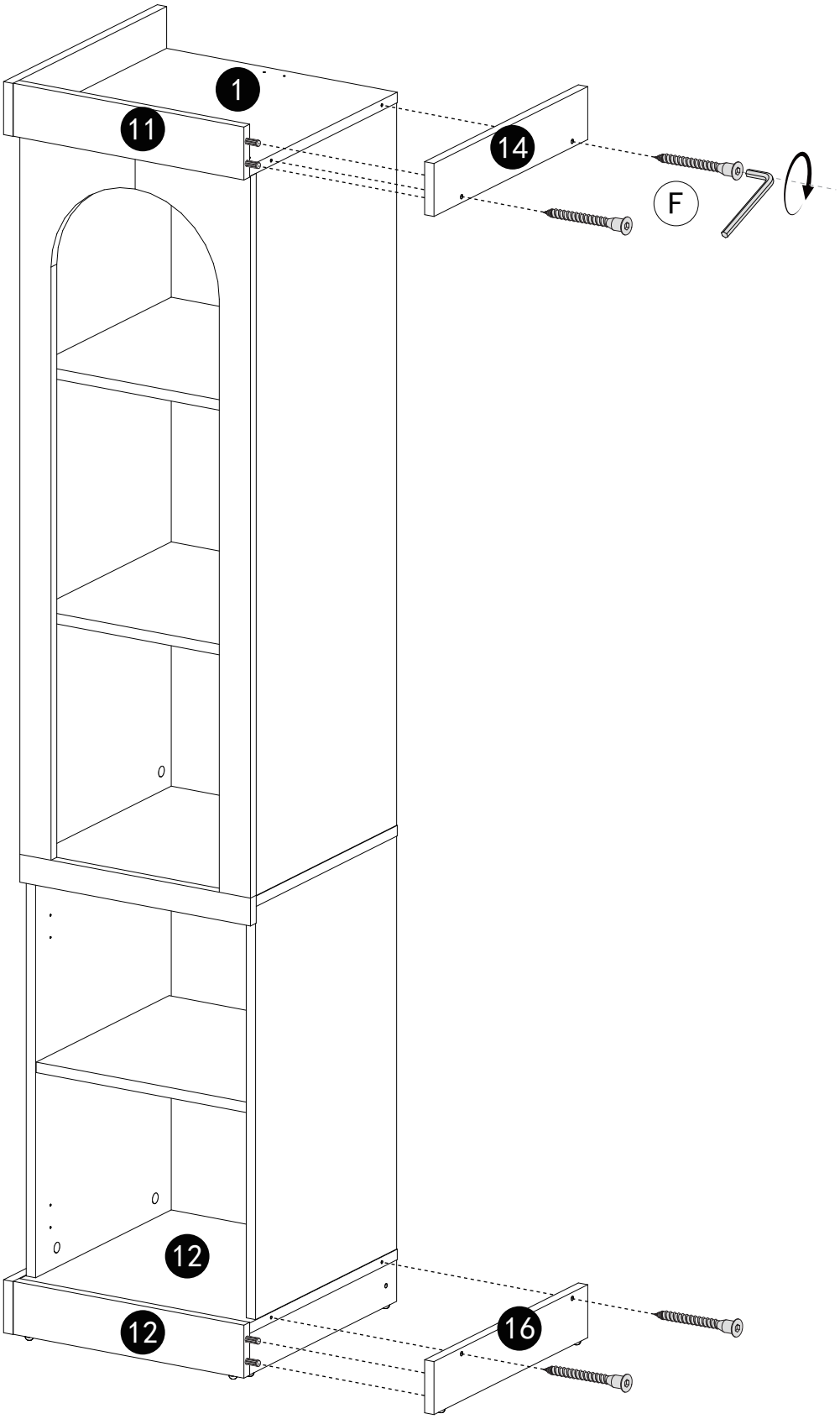

## STEP27

### Hinge adjustment

To facilitate the adjustment, install the E1 screw first, and then install the E2 screw.

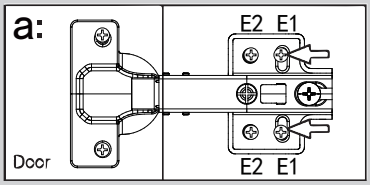


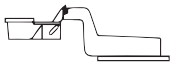

Great bend

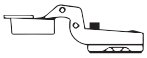

Middle curve

Straight arm

### Hinge adjustment

a:To move doors up or down:loosen screws shown and move doors to suit.

Once doors are aligned, re-tighten Screws H

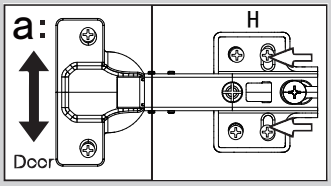


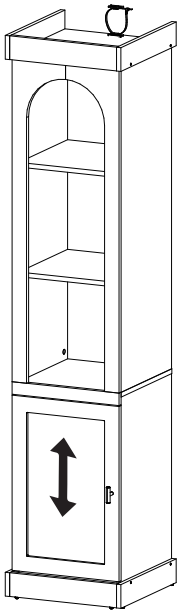

### Hinge adjustment

b:To move doors in or out: loosen screw shown and move doors to suit.

Re-tighten screws

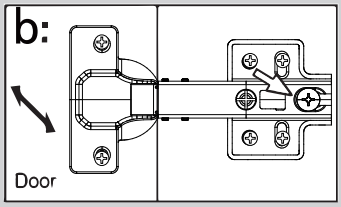


### Hinge adjustment

c:To move doors left or right:loosen screw shown and move doors to suit.

Re-tighten screws

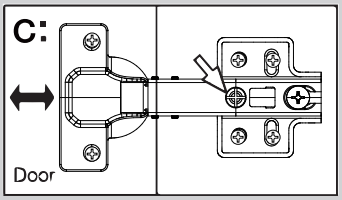


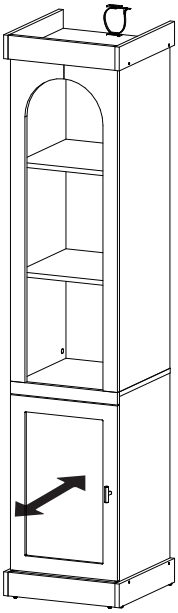

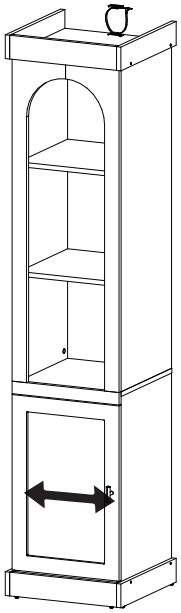

## STEP28

| YOU WILL NEED | | | | | |
|---|---|---|---|---|---|
| E | | x4 | C | | x2 |

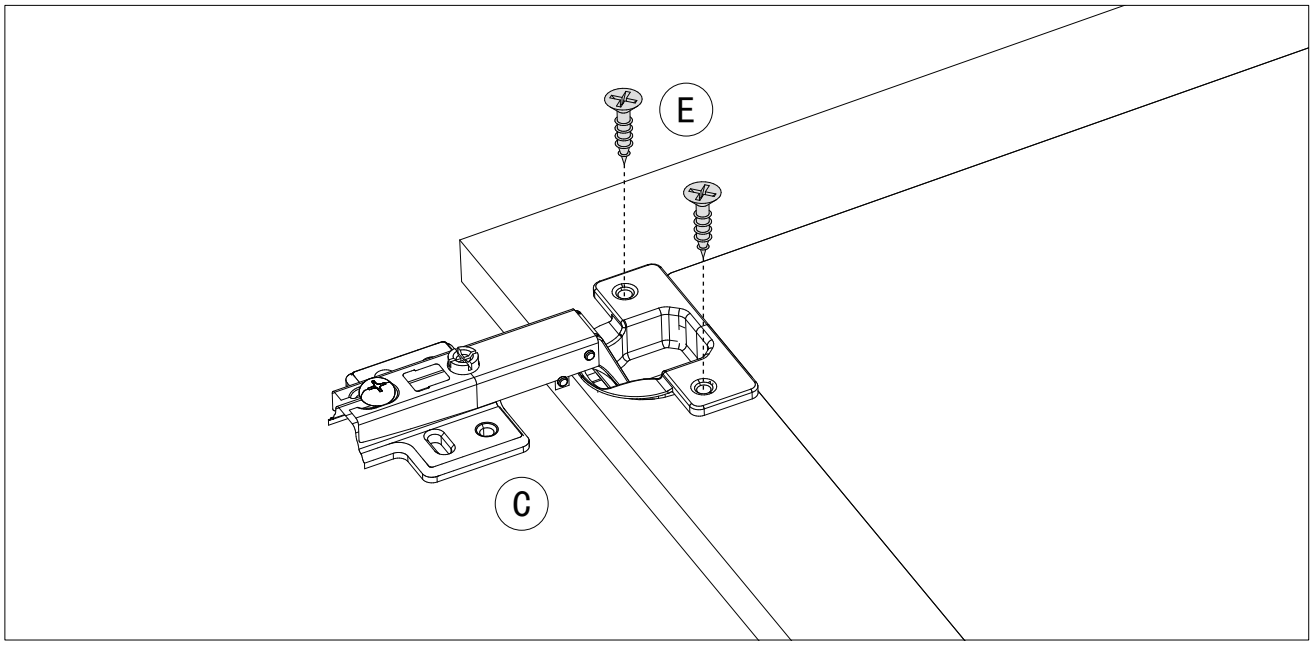


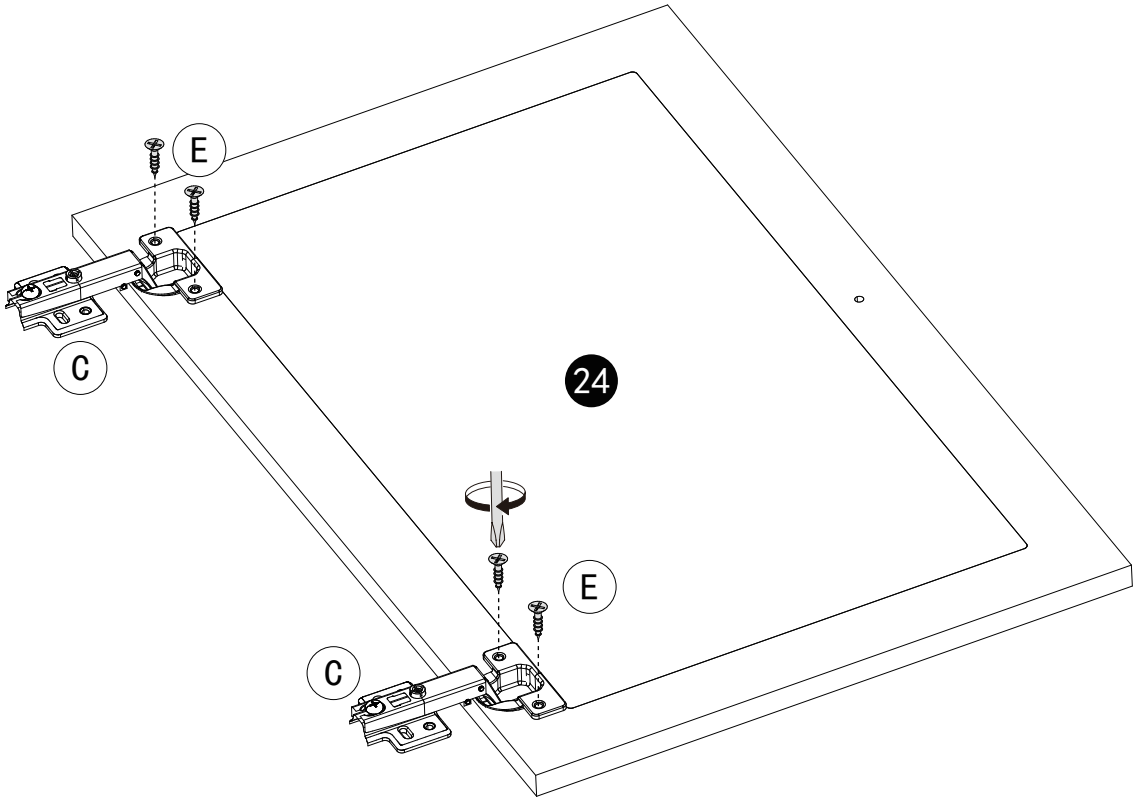

## STEP29

| YOU WILL NEED | | | | | |
|---|---|---|---|---|---|
| E | | x8 | G | | x1 |

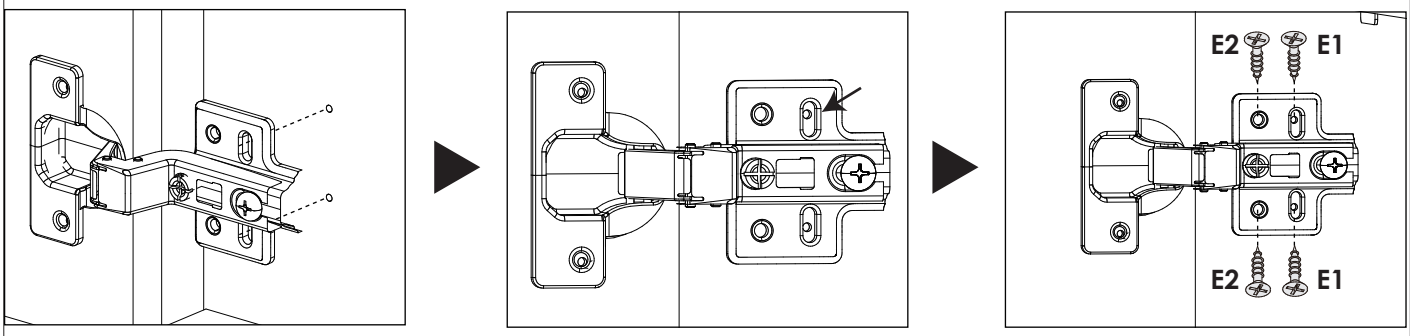


**First install E1 , which allow for fine adjustment, then install E2 to secure the assembly.**
**Please note: The door panel can no longer be adjusted vertically after the E2 is installed.**

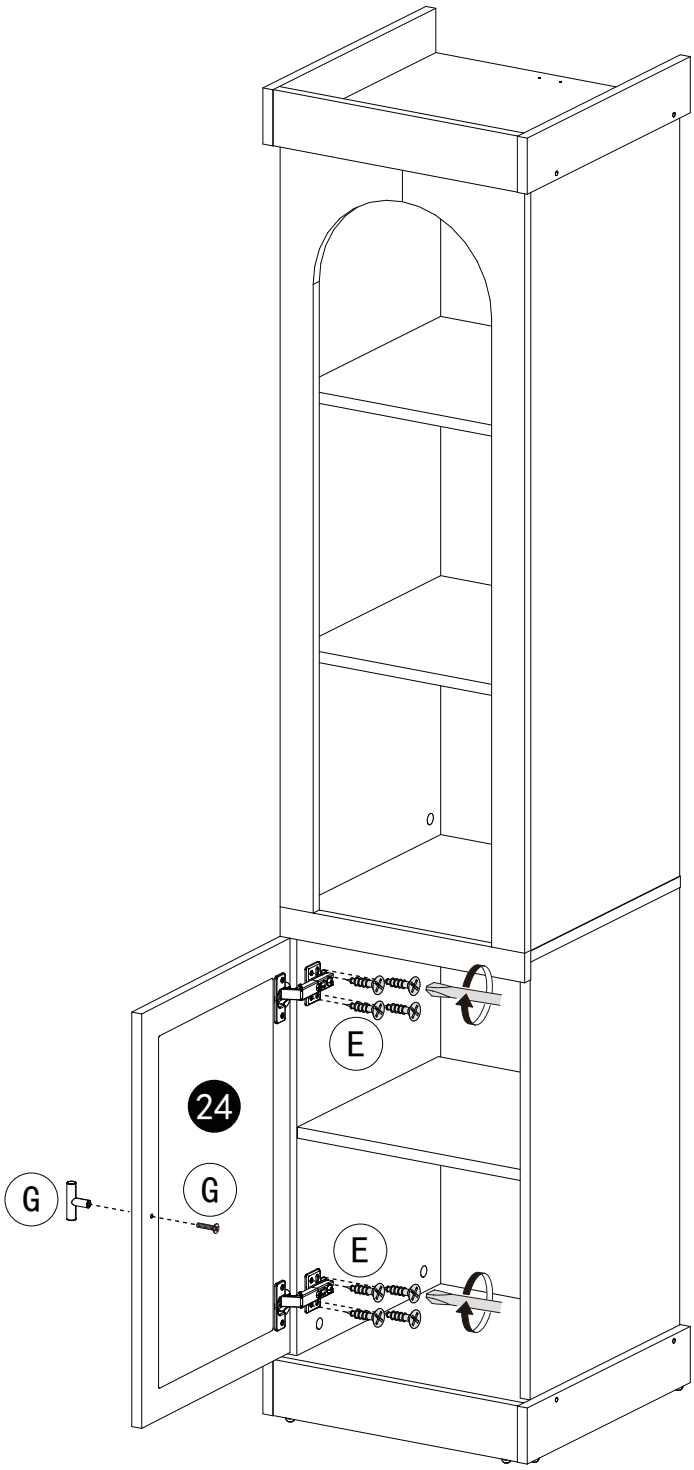

## STEP30

| YOU WILL NEED | | |
|---|---|---|
| K | 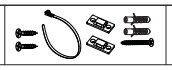 | x1 |

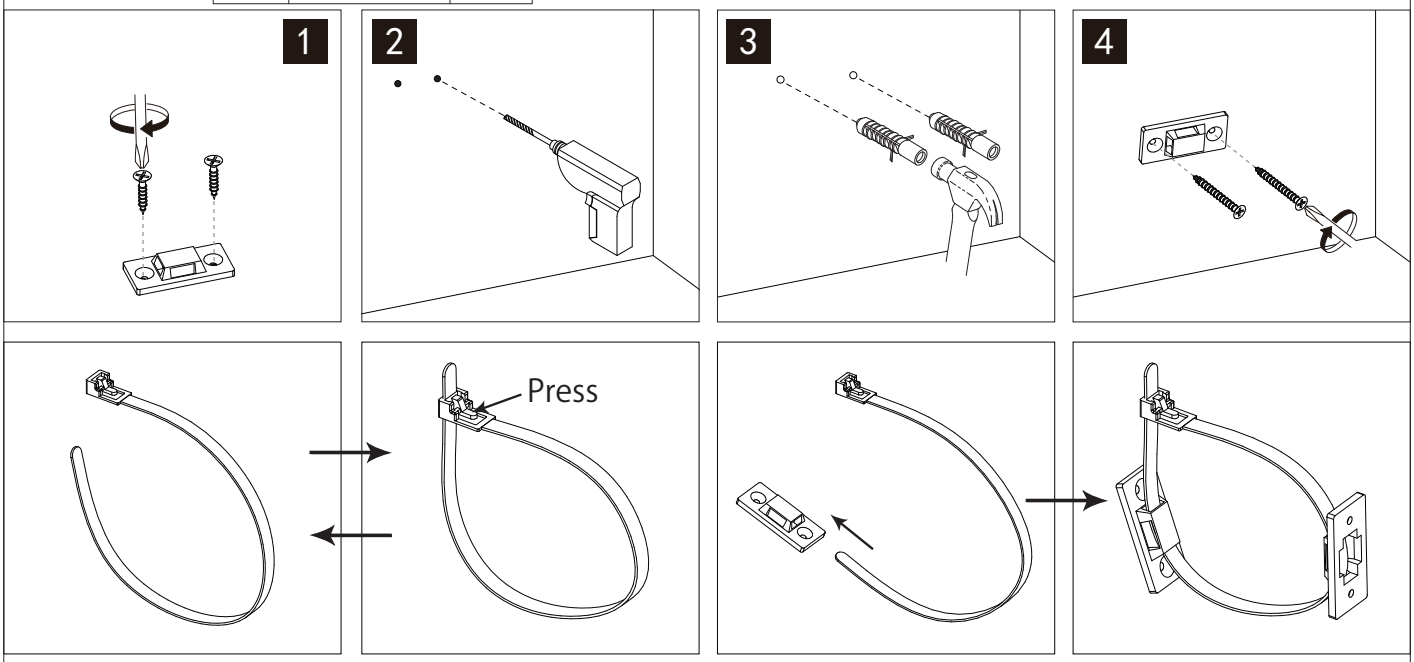


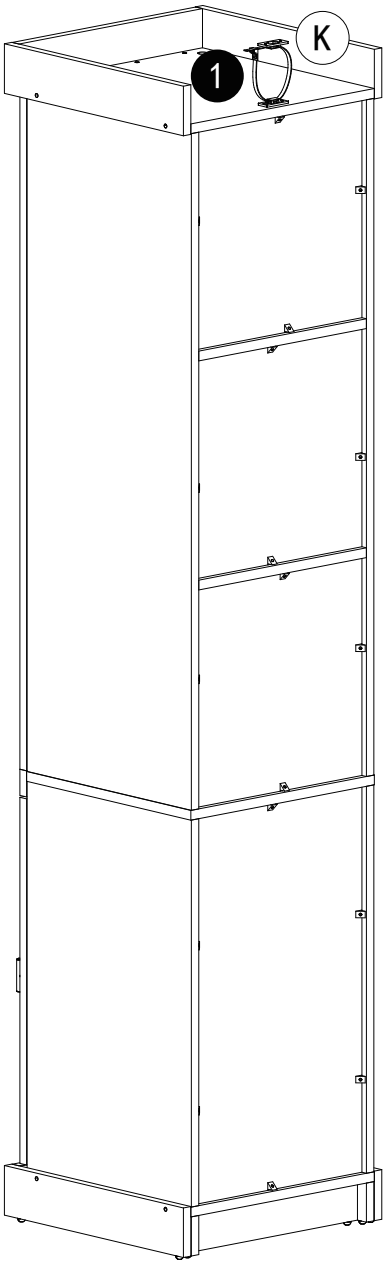


**1**. Install the plastic component onto board **1** using self-tapping screws.
**2**. Drill holes at appropriate wall locations and insert expansion anchors.
**3**. Secure the plastic component to wall expansion anchors using threaded rods.
**4**. Connect the cabinet body to the wall with cable ties.

## STEP31

| YOU WILL NEED | | |
|---|---|---|
| H | | x32 |

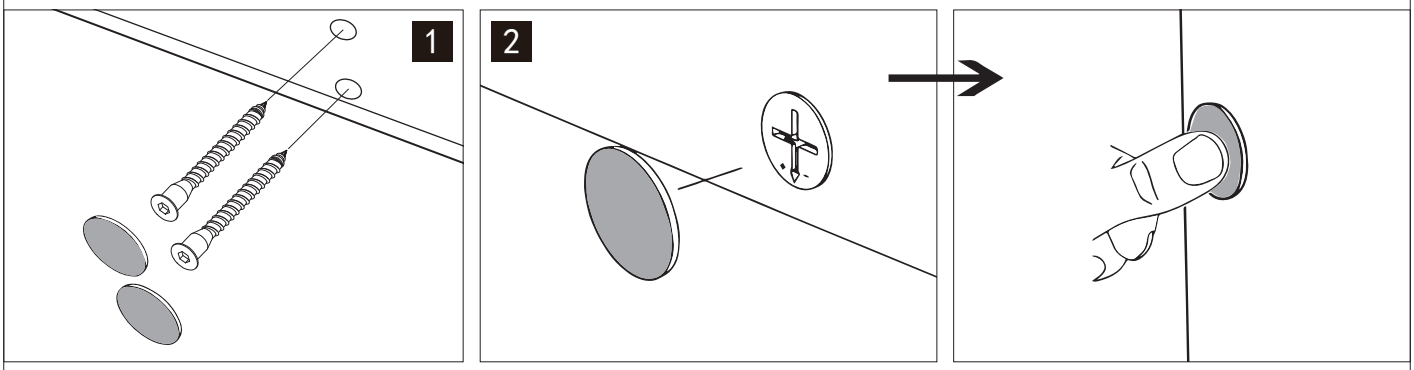


Add **H** fittings to all exposed holes on the front of the product

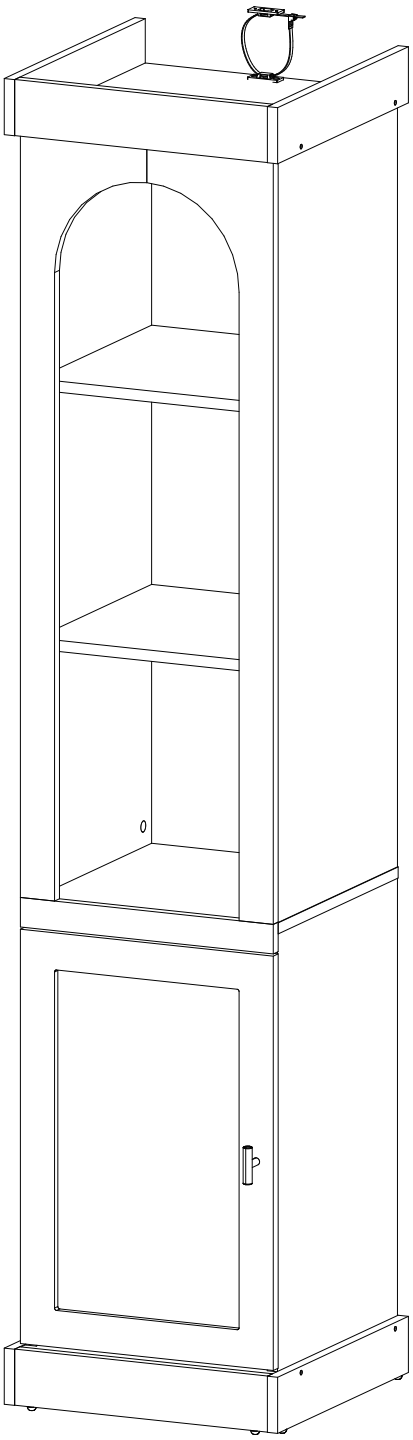

# Warning:

Seller is responsible for the product-related issues occurred upon receipt, but will not be responsible for the personal injury, property damage or loss resulting from the incorrect assembly, improper use, inadequate maintenance or neglect of this product.