Side Table

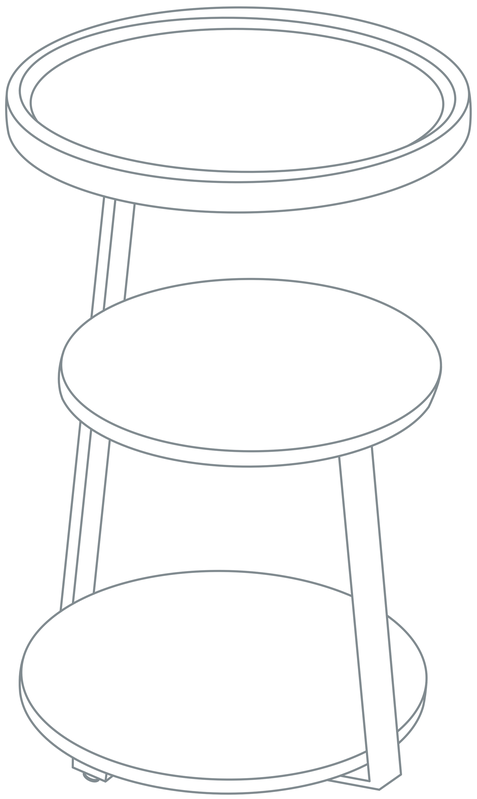

Ax1	Bx1	Cx1	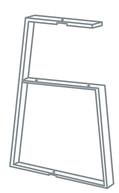 Dx1

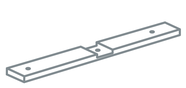 Ex1	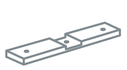 Fx1	Gx2	Hx10	Ix4	Jx1

Step 1

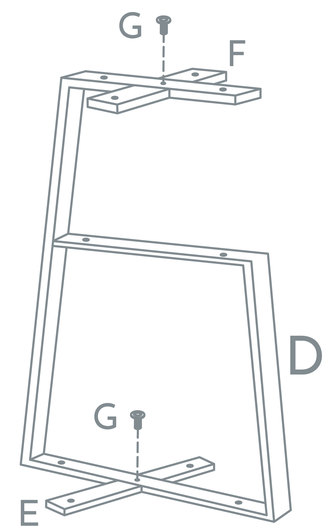

Use the Hex Key (J) and Screws (G) to fasten the Bases (E and F) to the the bottom and top of the Frame (D) respectively.

Step 2

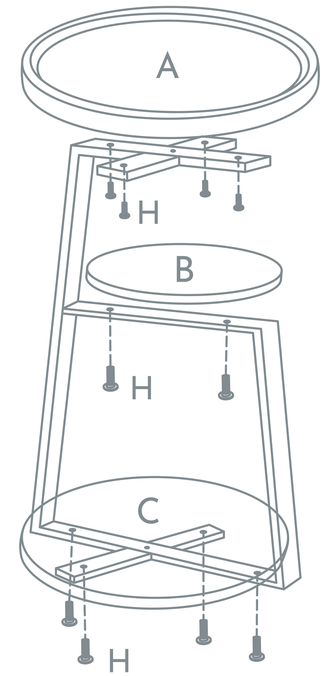

Use the Hex Key (J) and Screws (H) to fasten the Surfaces (A, B, and C) to the Frame and Bases (D, E, and F).

Step 3

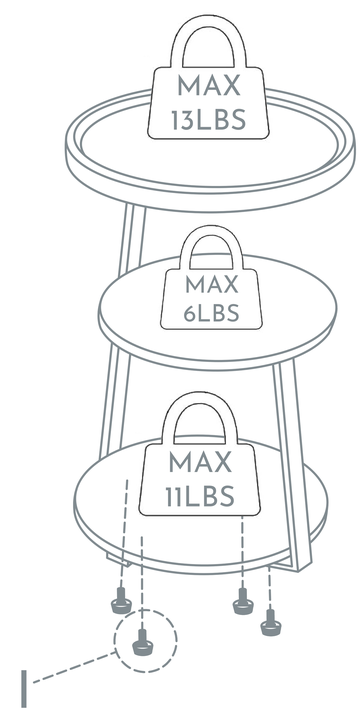

And finally, attach the Feet (I) to the bottom of the table (D and E).