UVANIOHOM

Assembly instruction

Dining Table

SKU:SSVDT04

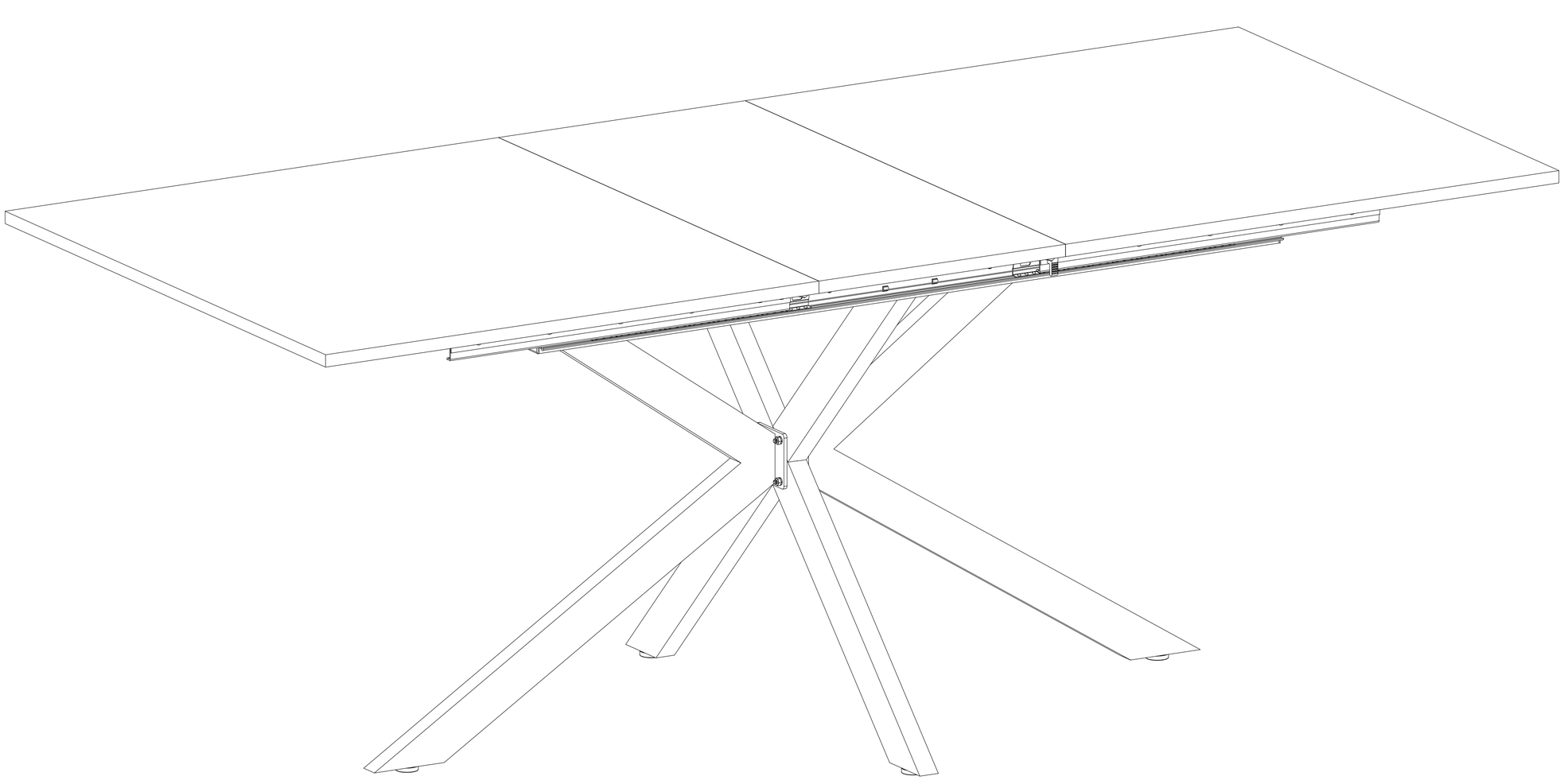

Customer Service Before Return:

If part is missing or damaged,or you need help with assembly,

Please do not hesitate to contact us.

SELLER CONTACT INFORMATION:

Starseavision@163.com

UVANIOHOM

YOUR VALUED HOME

Before Assembly

IMPORTANT NOTE:

- Make sure parts hardware are included and free or obvious Defect before disposing of any packaging
- Place all wooden parts on a clean and smooth surface such as a rug or carpet to avoid the parts from being scratched.
- DO NOT tighten all screws and bolts until completely assembled.
- Assembly will require two people.

PART LIST

1 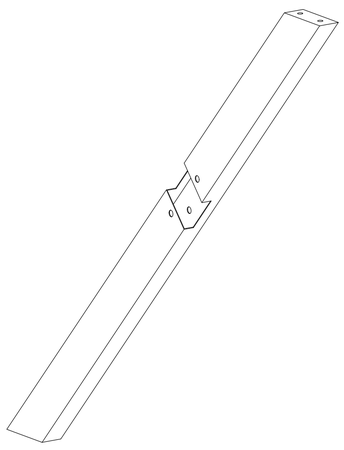	2 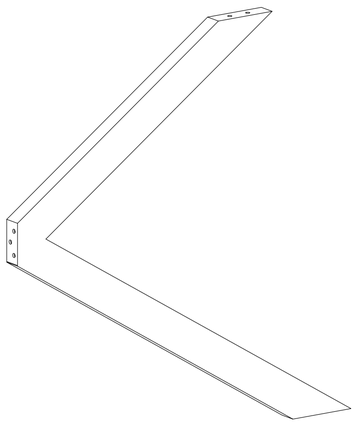	3 	4 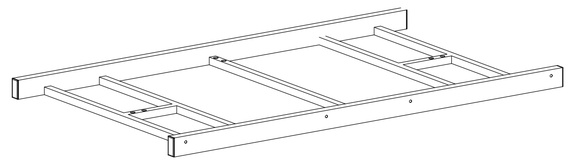
2PCS	2PCS	2PCS	1PC
5 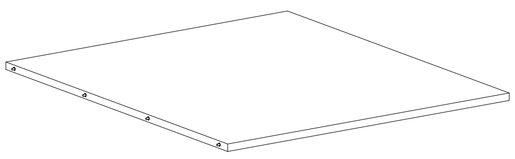	6 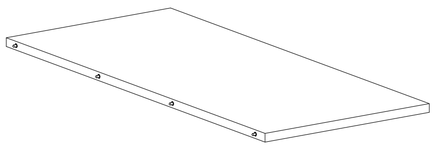	7 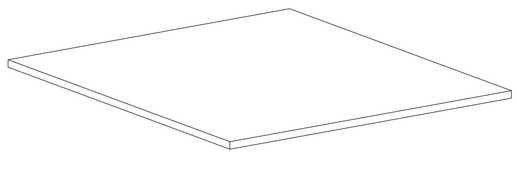	8 
1PC	1PC	1PC	2PCS

HARDWARE LIST

A 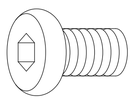 M6 x 12mm	B 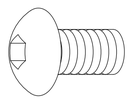 M6 x 12mm	C 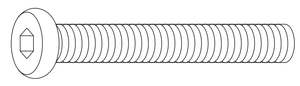 M6 x 50mm	D 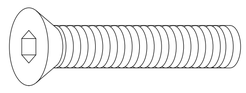 M6 x 30mm
14PCS	16PCS	4PCS	8PCS
E 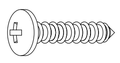 Ø4 x 12mm	F  M6	G  M6	H 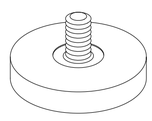 Ø30
16PCS	4PCS	4PCS	4PCS
J 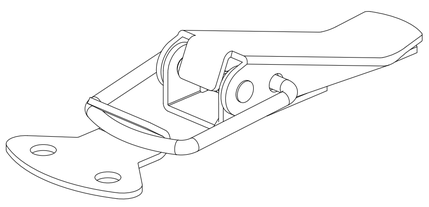	K 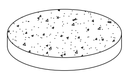 Ø15mm	L 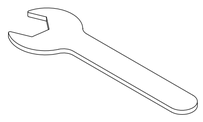 10mm	M 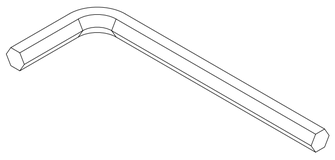 4mm
4PCS	9PCS	1PC	2PCS
N 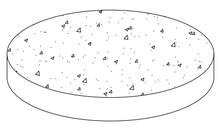 Ø30mm			
4PCS			

IMPORTANT NOTE:

- Make sure parts hardware are included and free or obvious
  Defect before disposing of any packaging
- Place all wooden parts on a clean and smooth surface such as a rug or carpet to avoid the parts from being scratched.
- DO NOT tighten all screws and bolts until completely assembled.
- Assembly will require two people.

NOTED:

1.Do not fully tighten all bolts unti al parts are in place.Failure to folow theseinstructions may cause the bolt to misalign during assembly.

2.To prevent injury and property damaged from unexpected tipping of furniture,we highlyrecommend installation of the anti-tip kit included with this product.

Step 1

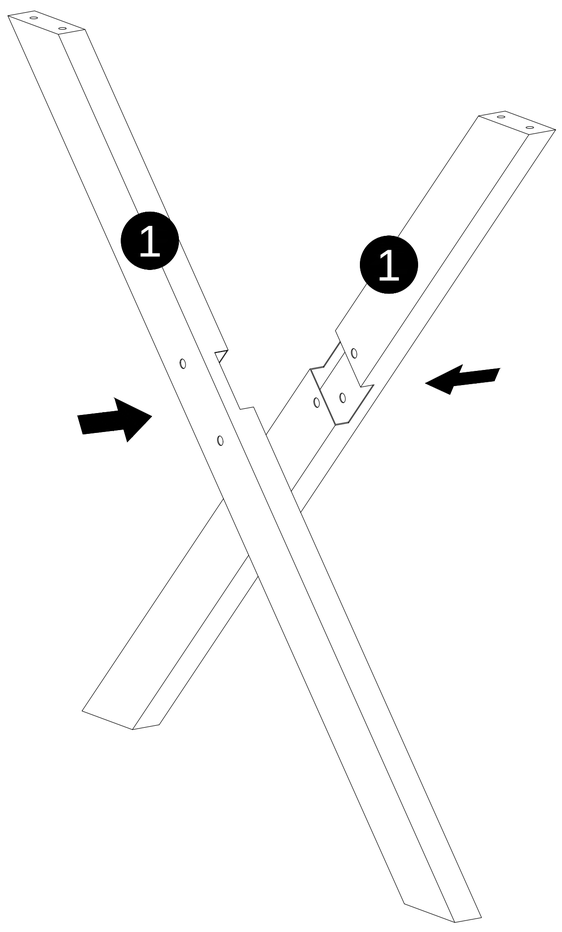

Step 2

YOU WILL NEED
Ax6

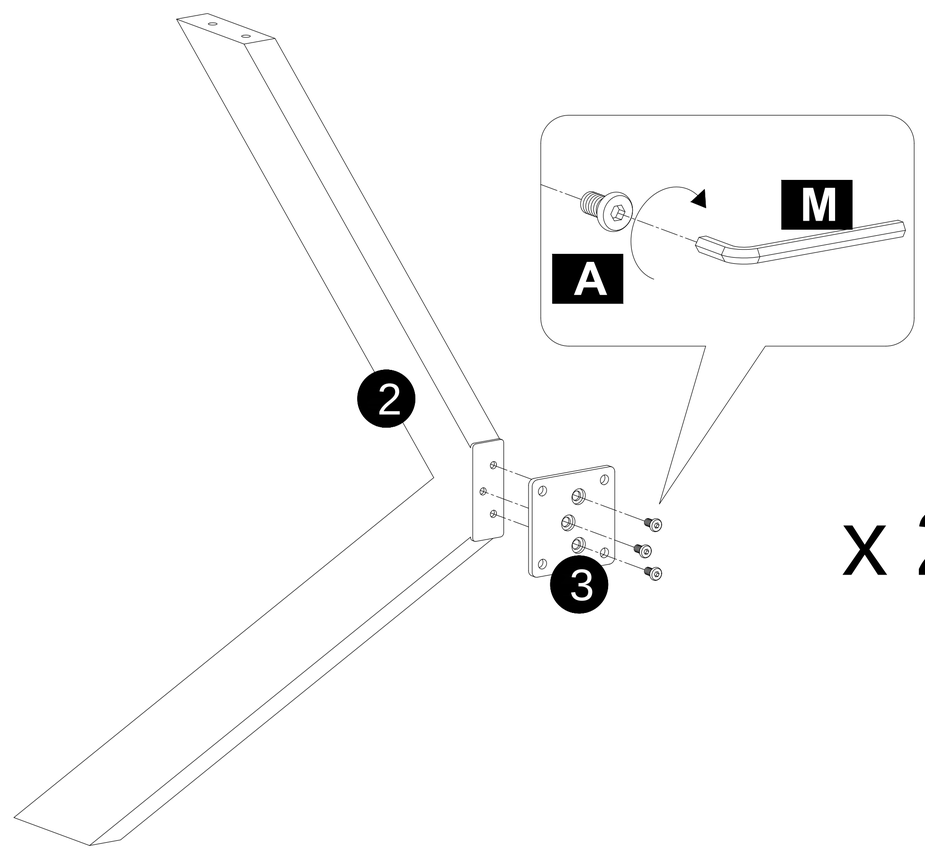

Step 3

YOU WILL NEED
Cx4 / Fx4 / Gx4

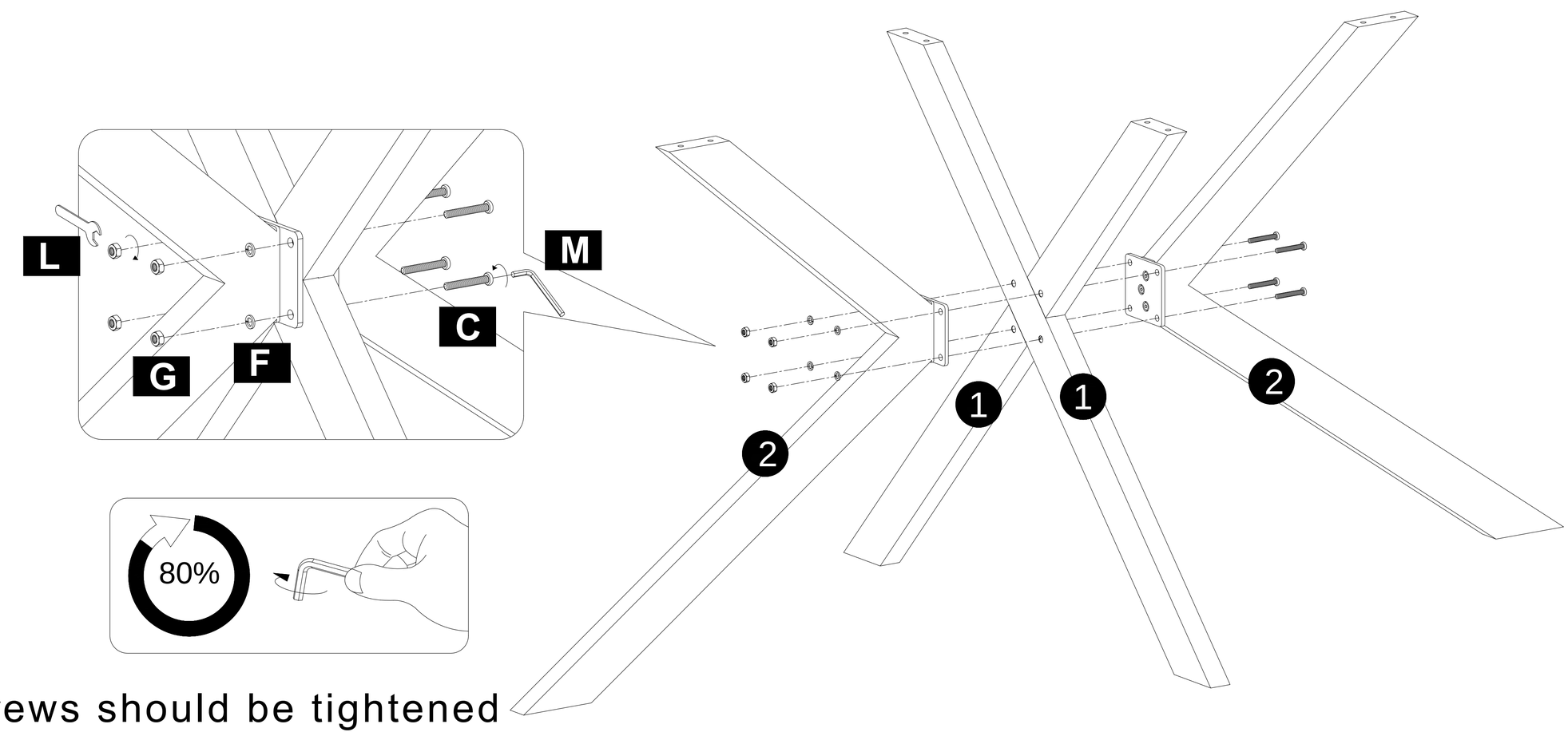

The screws should be tightened to about 80%, not fully tightened.

Step 4

YOU WILL NEED
Dx8

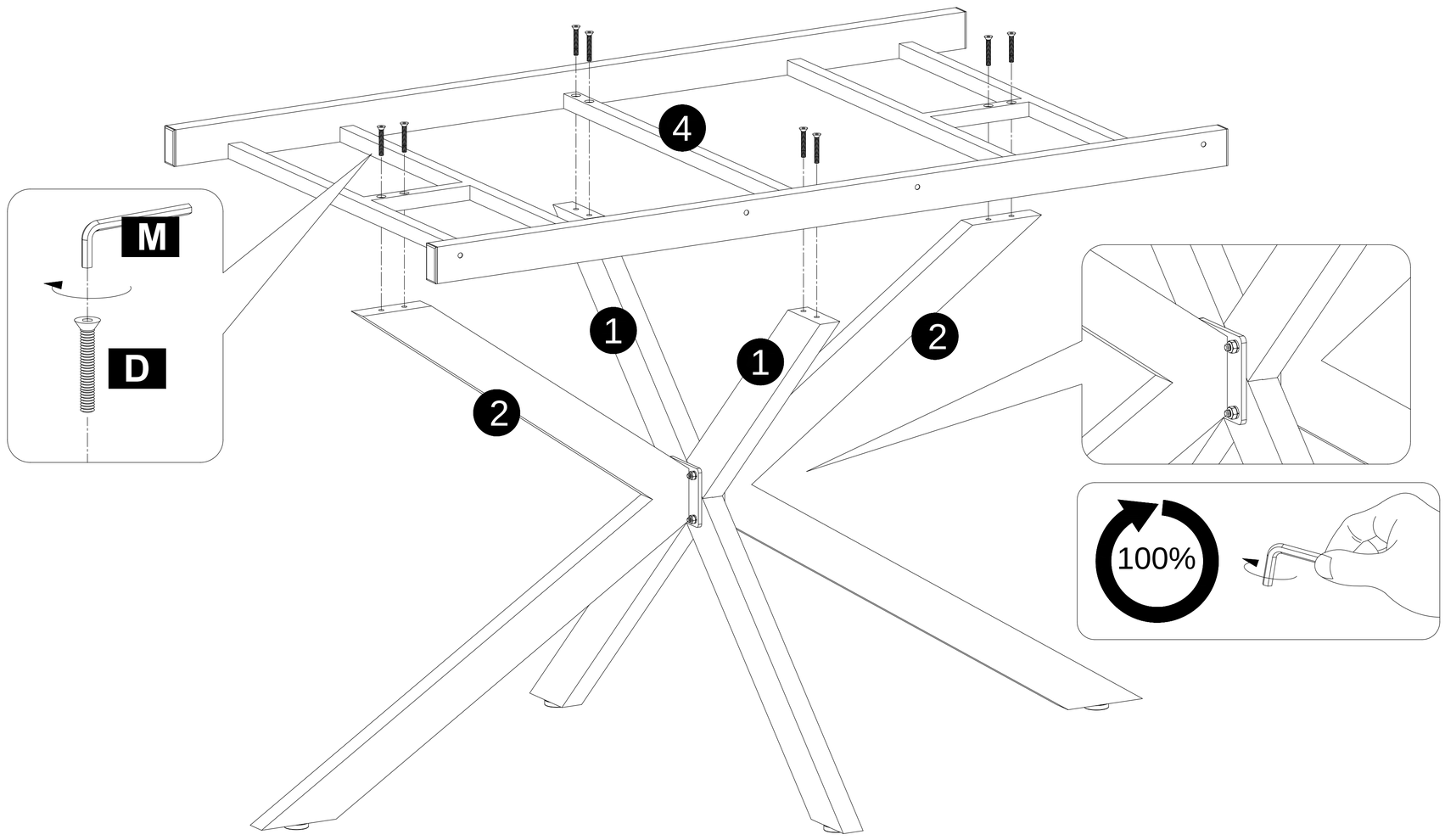

Step 5

YOU WILL NEED
Ax8 / Kx9

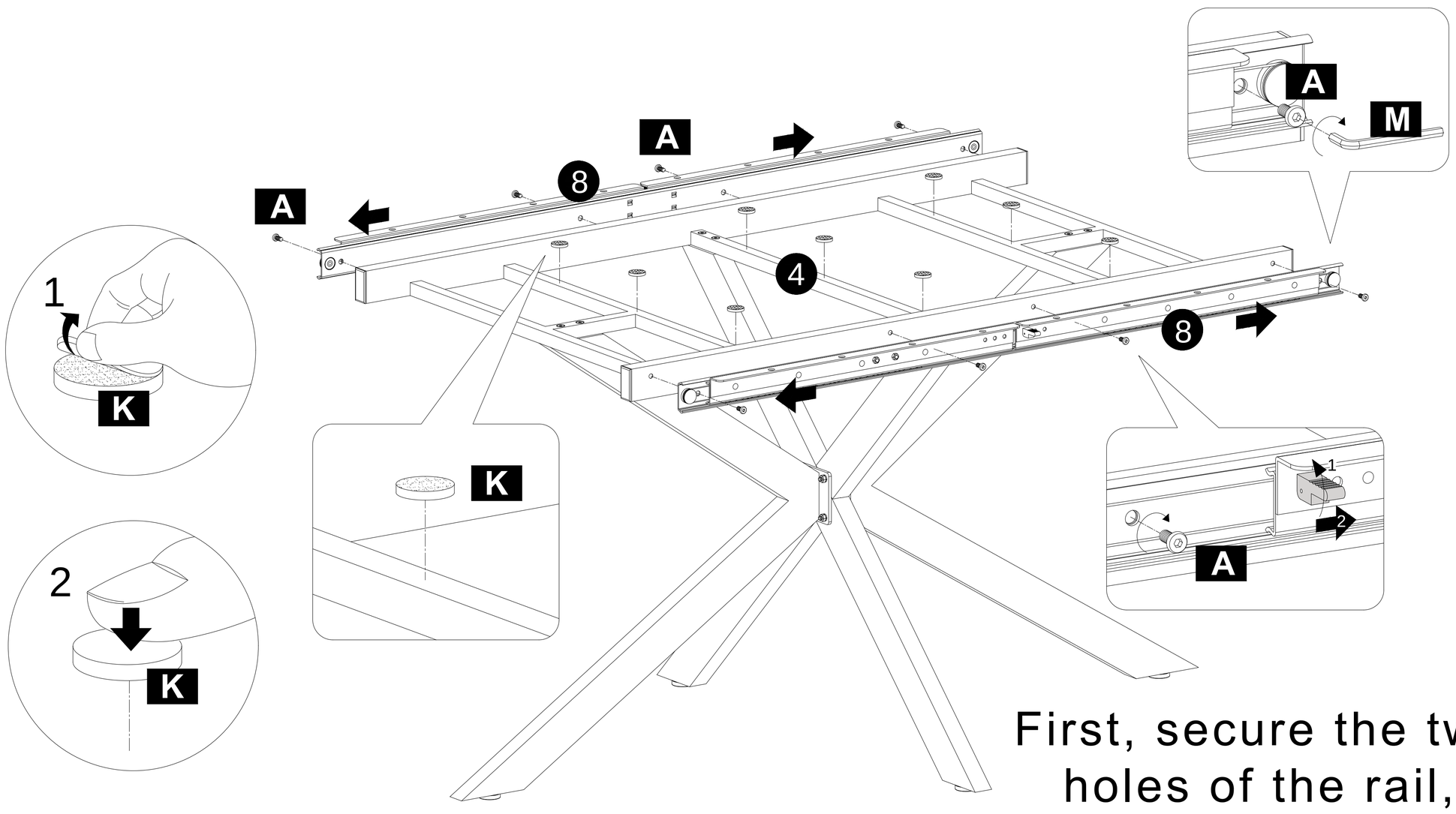

First, secure the two side holes of the rail, then slide open the rail and lock the two middle holes.

Step 6

YOU WILL NEED

Ex16 / Jx4 / Nx4

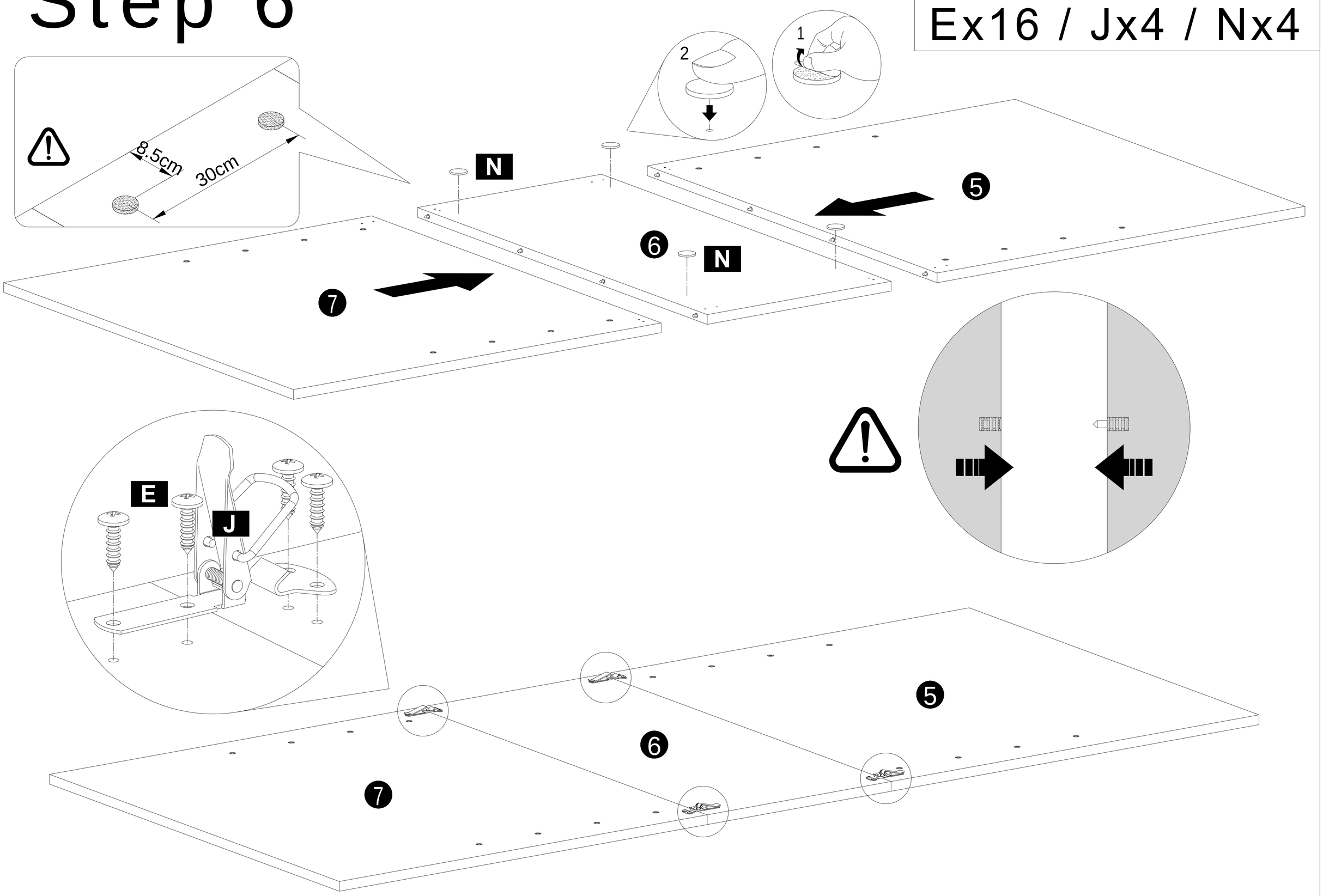

Step 7

YOU WILL NEED

Bx16 / Hx4

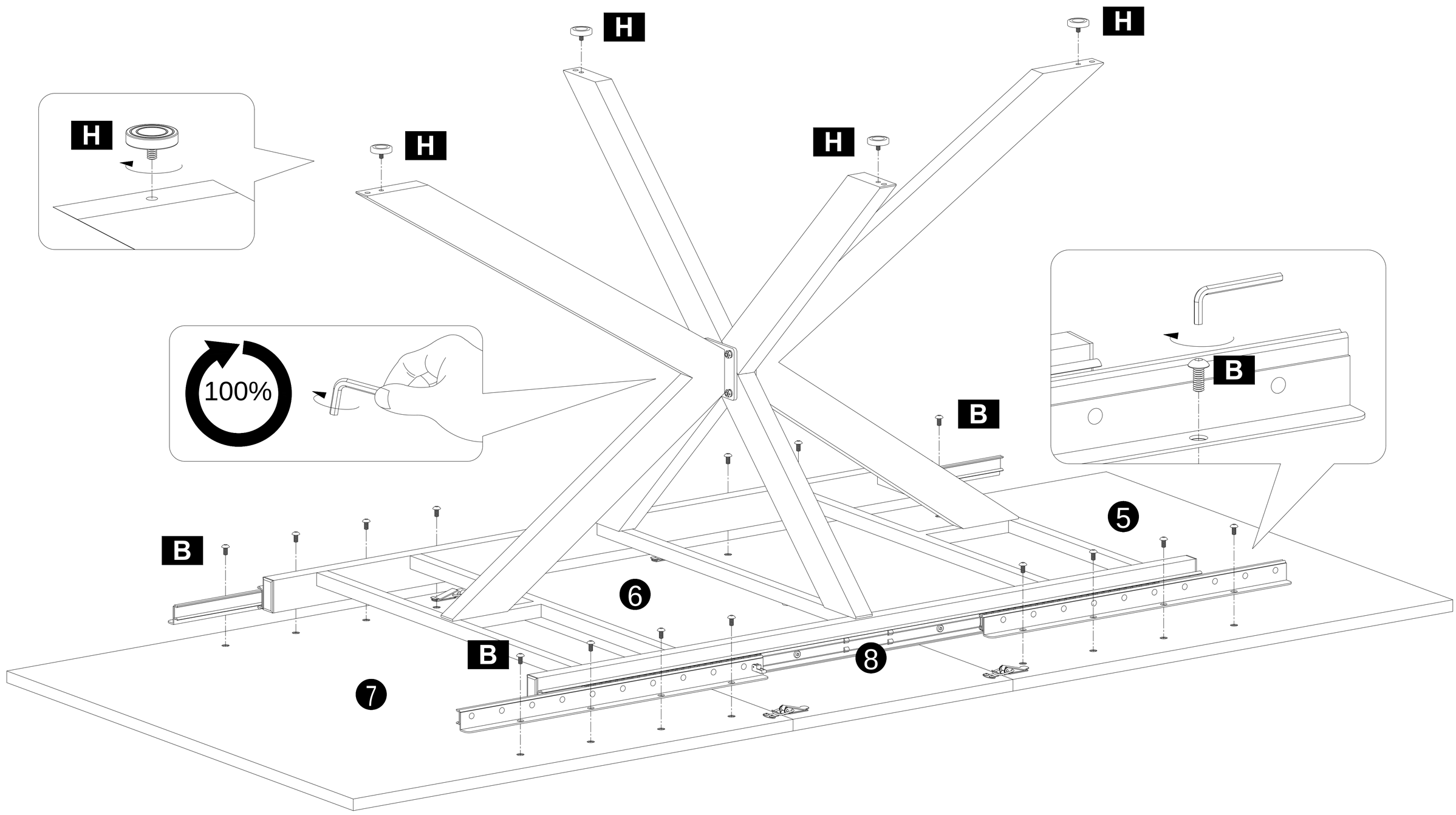

Step 8

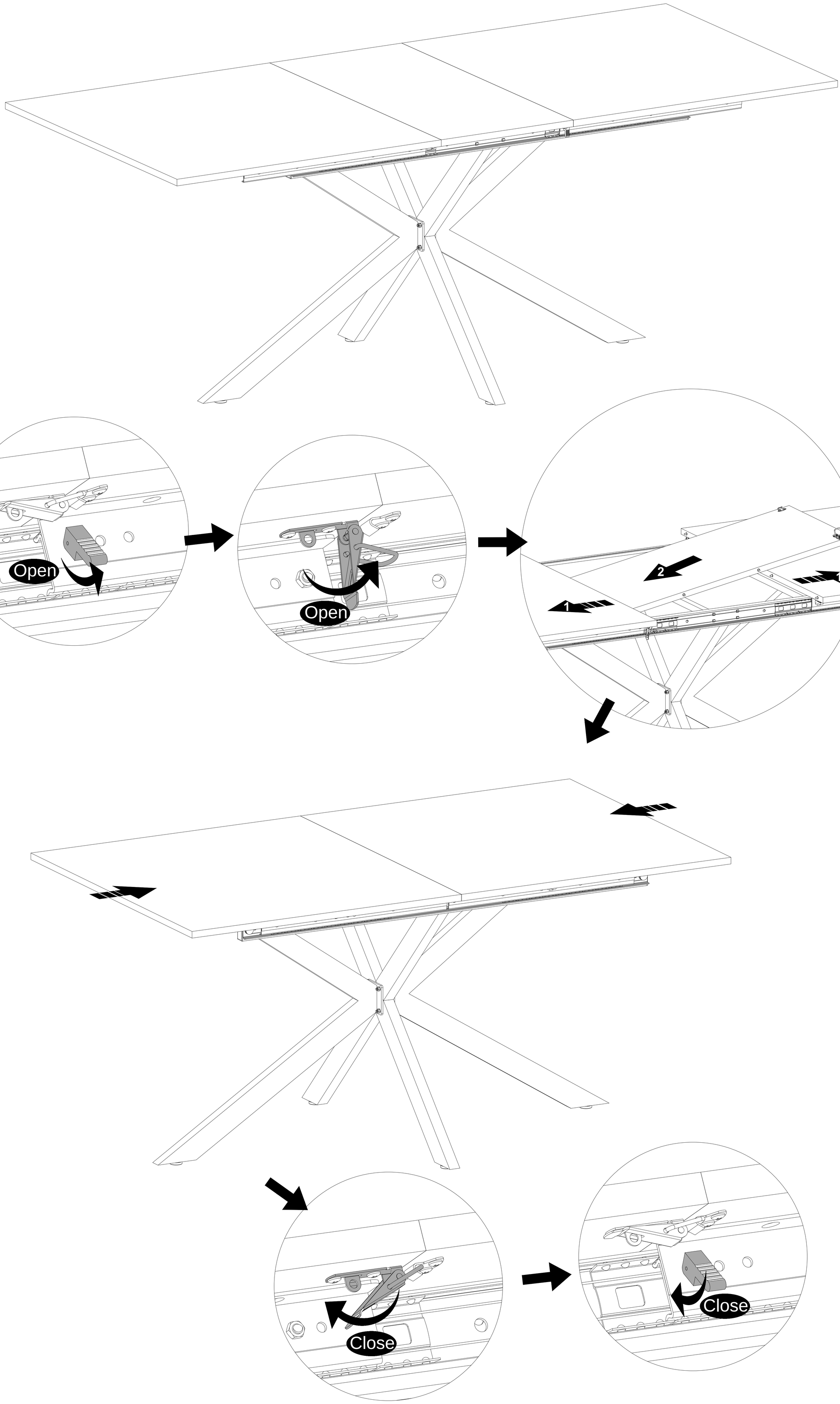

Step 9

