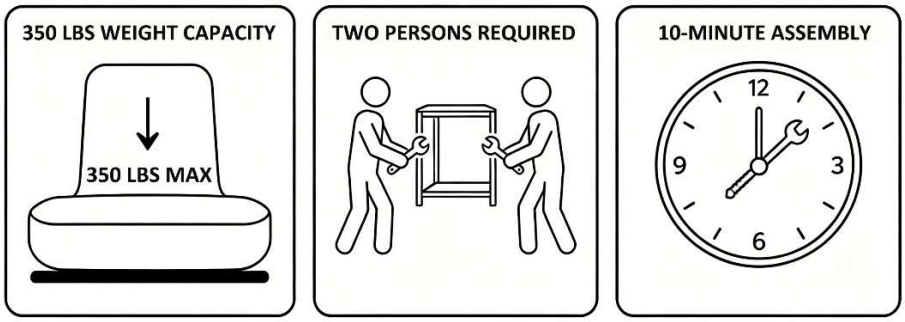

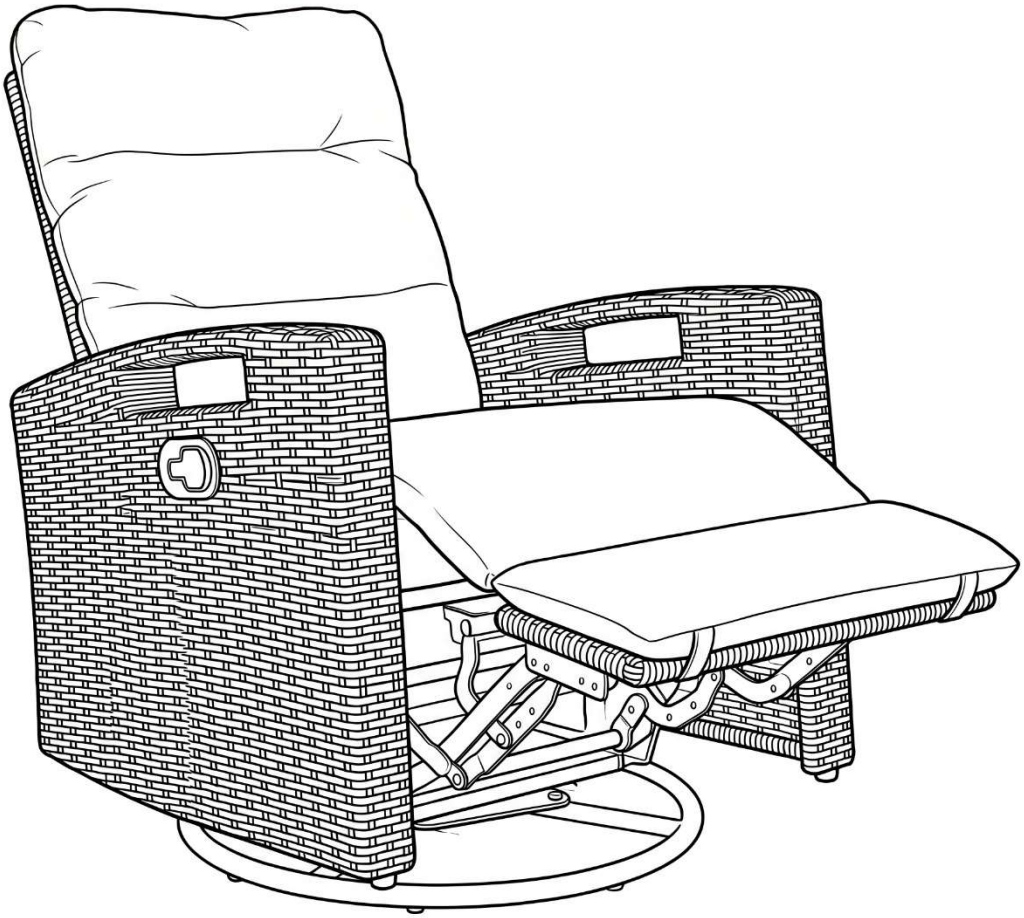

INSTRUCTION MANUAL

Video Instruction

Outdoor Wicker Swivel Recliner Chair

MG-R005-BR

READ & SAVE BELOW INSTRUCTIONS BEFORE ASSEMBLY

1. Please separate and identify all individual parts and hardware components, and ensure that all listed items are physically available / in hand.
2. To avoid scratching the parts during assembly, please use a soft mat or similar soft surface as the work surface.
3. Please follow the instruction manual and assemble it step by step.
4. Some parts may have sharp edges. For safety, assembly should be performed by adults only. This is not a toy and is not suitable for young children.
5. To prolong service life, cover the recliner with a furniture cover (not included) or store it indoors when not in use for an extended period.

PARTS LIST

PARTS NUMBER	DESCRIPTION	THUMBNAIL	QTY
A	SEAT BASE	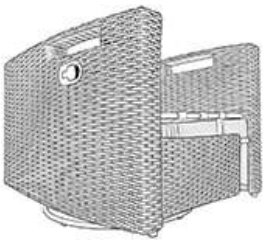	1
B	BACKREST	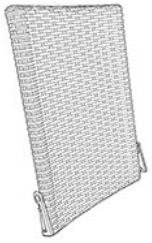	1
C	SEAT CUSHION	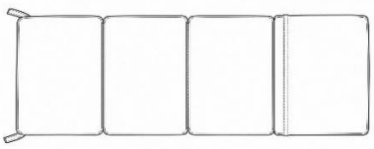	1
D	BACK CUSHION		1

ASSEMBLY STEPS

STEP-1:

Insert backrest **B** into seat base **A**, align the corresponding slots, then lower the backrest. Make sure the slots on the backrest are fully inserted into the seat base until you hear a "**click**".

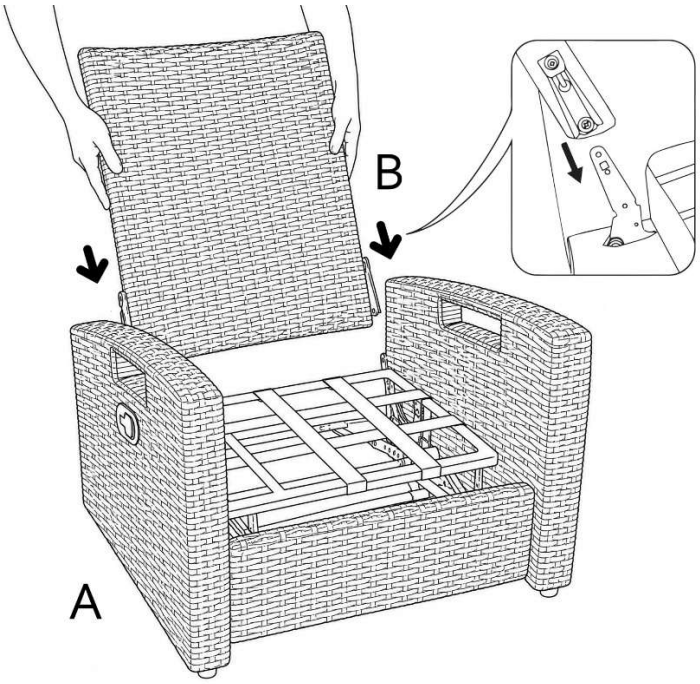

STEP-2:

Find the velcro tape under the seat cushion **C**, align it with the velcro tape on the seat base **A**, then press down into place.

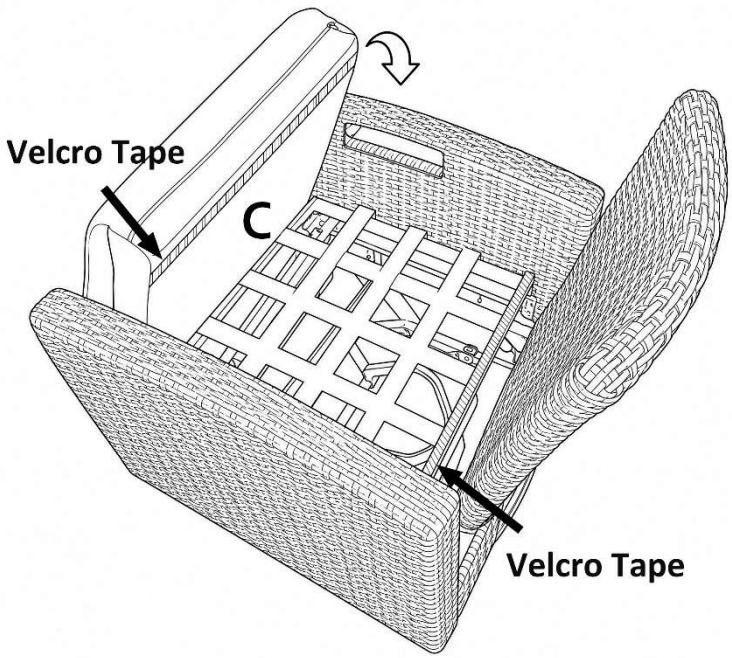

ASSEMBLY STEPS

STEP-3:

Lay seat cushion **C** along the foot pedal direction.

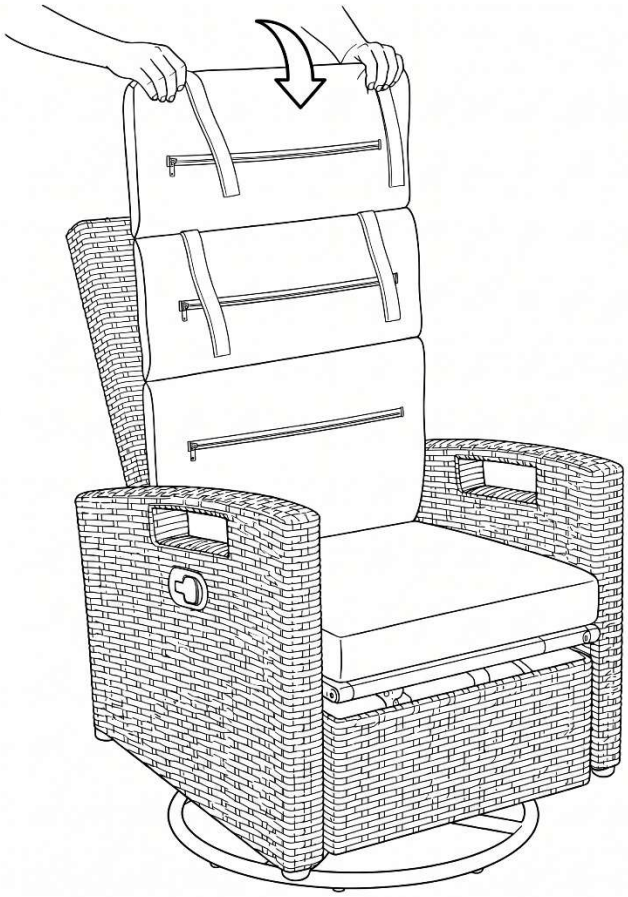

Pull the handle to extend the foot pedal, then secure the cushion with the strap.

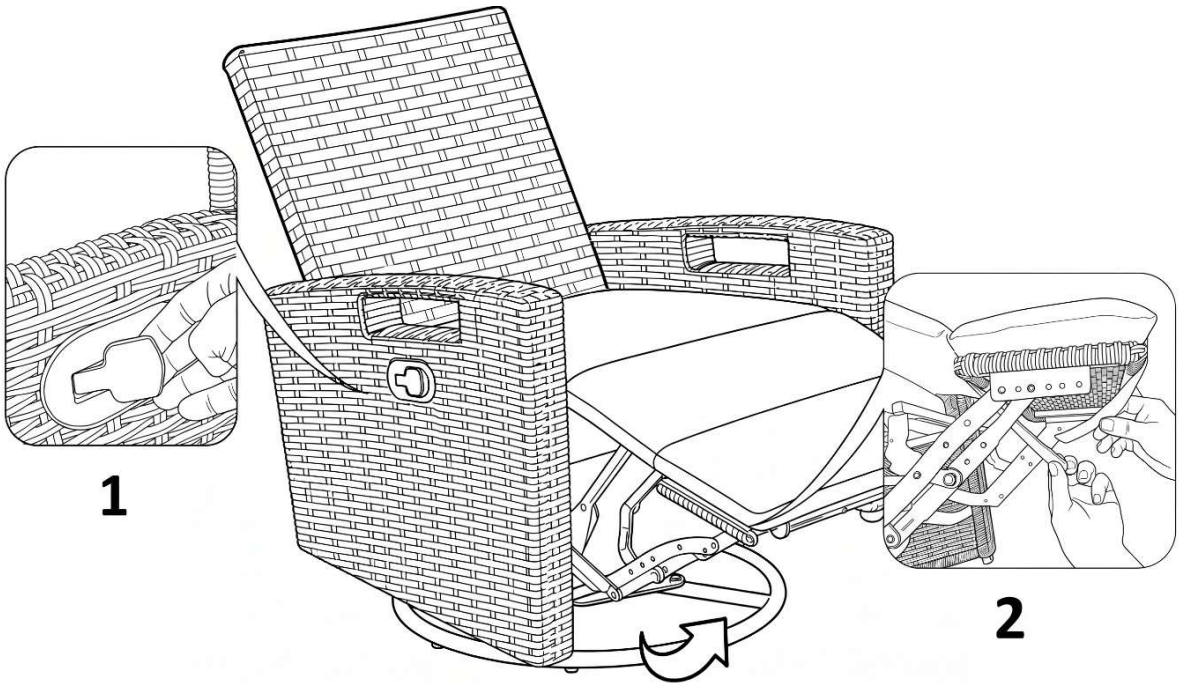

ASSEMBLY STEPS

STEP-4:

Secure back cushion **D** by sliding its rear fabric sleeve down over the backrest.

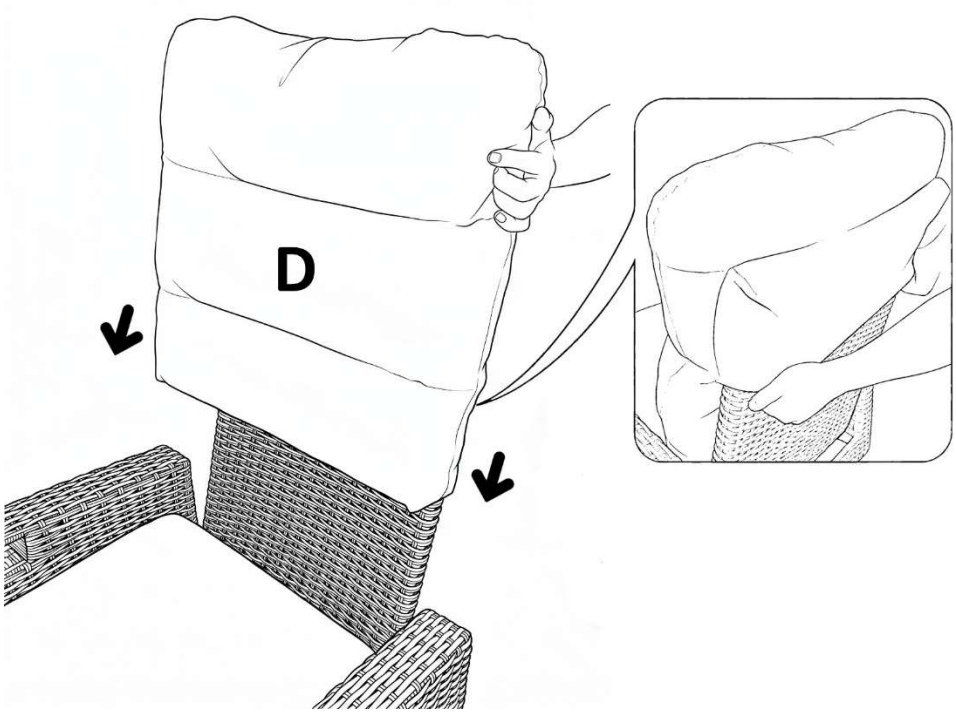

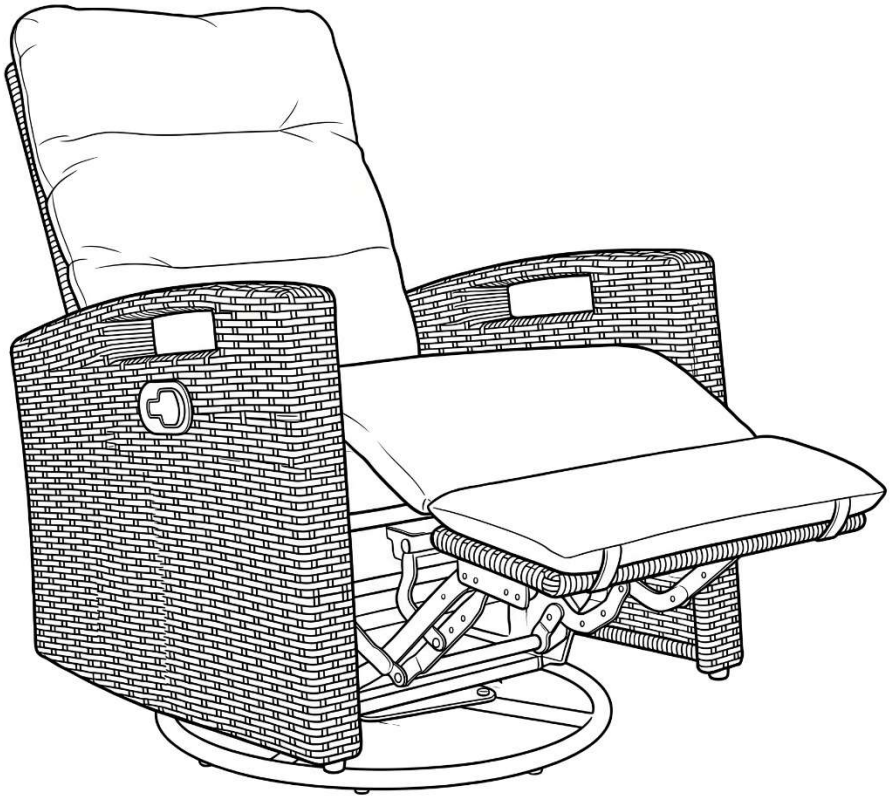

HOW TO RECLINE

This manual recliner features a balanced mechanism that operates with your body weight.

1. Sit fully back in the recliner for proper weight distribution.
2. Pull the handle on the side of the armrest to set the recliner to RELAX MODE.
3. To switch to NAPPING MODE, grip the top of the armrests and push the backrest backward. **Do not use the handle for this adjustment.**

Due to weight distribution, you may need to sit further back to help the backrest recline to NAPPING MODE. Lean forward will return to RELAX MODE.



READING MODE **RELAX MODE** **NAPPING MODE**

HOW TO RETRACT THE FOOT PEDAL

Please follow the steps and diagrams below to retract the foot pedal.

1. Adjust the recliner to RELAX MODE first.
2. Lean forward slightly and use your lower leg to push the foot pedal inward quickly until you hear a “click”, confirming it is fully retracted and locked.
3. Do not stand up until the foot pedal is completely retracted and locked.

Tip: Pull your foot back slightly and push with heel for better leverage.



Still have questions? Scan the QR code of video instruction。

WARNING

Do not sit, stand, or step on the foot pedal when extended.

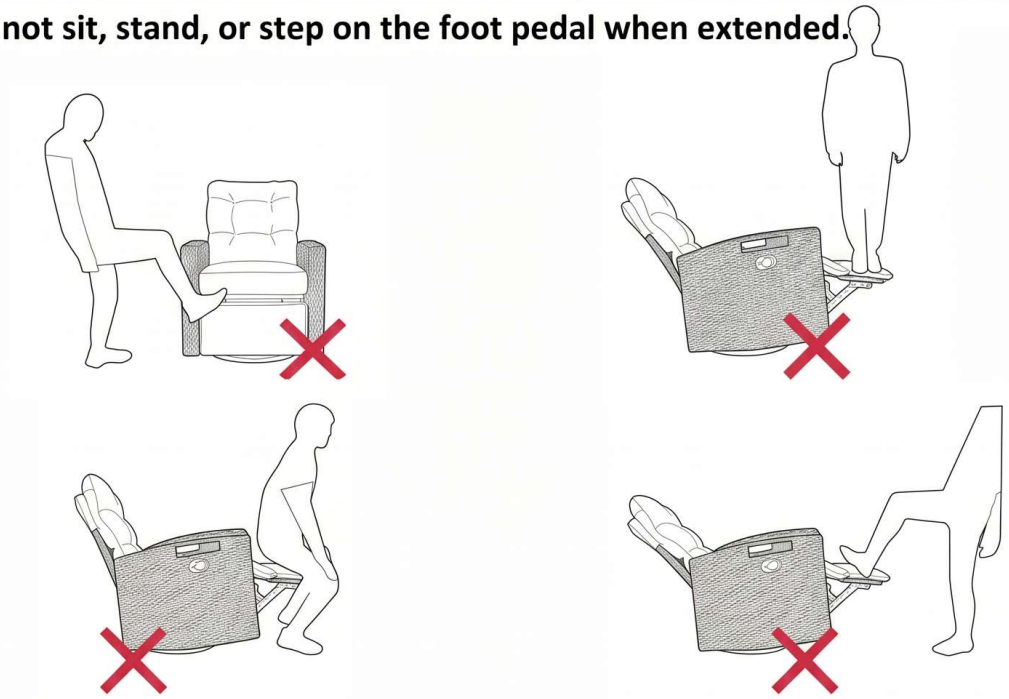

Ensure at least 15" from the wall before reclining.

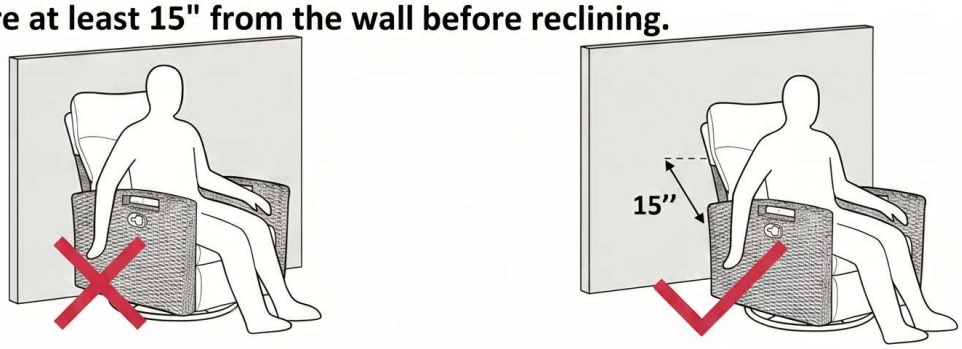

Two people required to move the recliner.

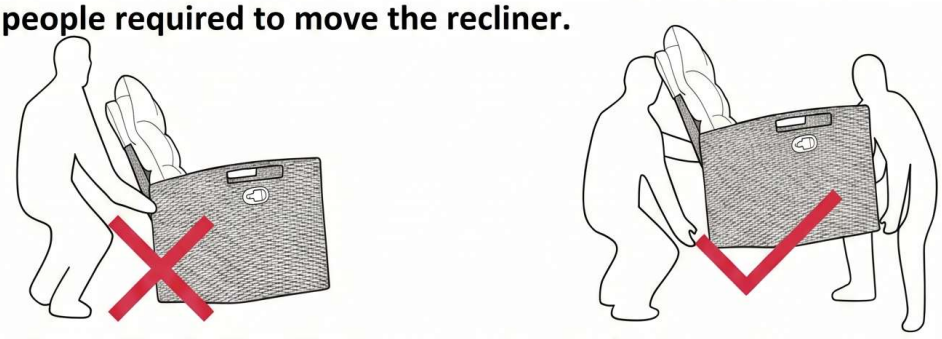

Do not move the recliner when it is reclined

