Enjoy Your Captiva Designs

# USE AND CARE GUIDE

## E02GR026

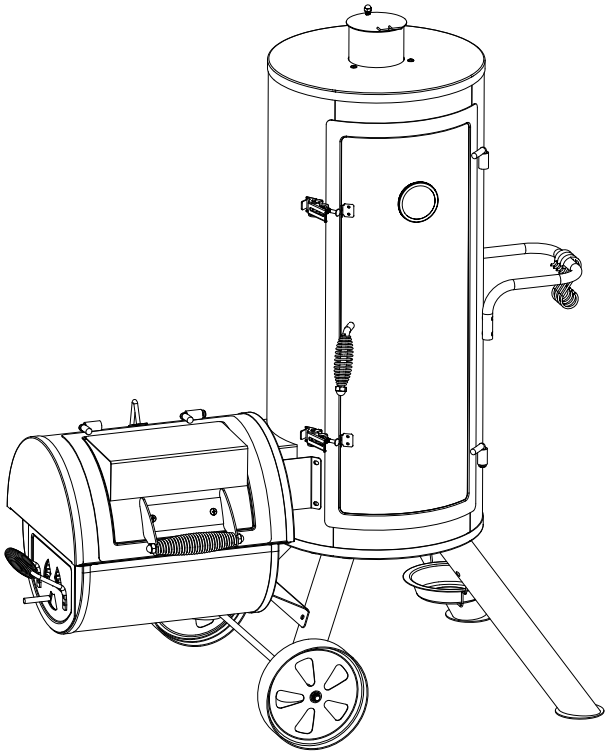

Assembly, Care And Use Instructions
Read Carefully Important:Retain These
Instructions For Future Reference.

This appliance is for Household use only.
This is not a commercial appliance.

Questions, problems, missing parts? Before returning to the store,
please contact our Customer Service

**service@getintouchservice.com**

*THANK YOU*

*We appreciate the trust and confidence you have placed in Captiva Desings through the purchase of our product. We strive to continually create quality products designed to enhance your home. Visit us online to see our full line of products available for your home improvement needs. Thank you for choosing Captiva Desings!*

# Table of Contents


Safety Information ..... 2
Warning ..... 3
Preparation ..... 4
Components ..... 4-5
Assembly Instructions ..... 6-18
Igniting the Fuel ..... 19
Cleaning and Maintenance ..... 19
Environmental Protection & Disposal ..... 19
Warranty ..... 20


# Safety Information

### Assembler/Installer

**This instruction manual contains important information necessary for the proper assembly and safe use of this appliance. Read and follow all warnings and instructions before assembling and using this appliance.**

**Leave these instructions with the consumer.**

### Consumer/User

**Follow all warnings and instructions when using this appliance. Keep these instructions for future reference.**

### Proper Utilisation

**The barbecue may only be used for preparing suitable foods. All requirements of this assembly and operation manual must be complied with. Only for private domestic use!**

**⚠ PROP 65 WARNING:**

**This product can expose you to chemicals including Chromium (hexavalent compounds), which are known to the State of California to cause cancer and birth defects or other reproductive harm.For more information visit www.P65Warnings.ca.gov.**

# Warning

**⚠ WARNING:**
**Risk of burning!**
- **Make sure that the barbecue is standing on a flat and fireproof surface that is not made of glass or plastic.**

**⚠ WARNING:**
**This barbecue will become very hot, do not move it during operation!**
- **Always wear barbecue gloves when grilling or adjusting the vents as well as when using a chimney starter.**
- **When preparing food, adjusting the vents, placing charcoal and using the thermometer or lid always wear barbecue gloves.**
- **Grill gloves must be tested in accordance with local code.**
- **For grilling use only qualified barbecue charcoal or barbecue charcoal briquettes.**
- **Do not BBQ before the fuel has a coating of ash.**
- **Use grilling tongs with long, heat-resistant handles.**
- **Allow the barbecue to cool down completely before cleaning it.**

**⚠ WARNING:**
**DANGER to children and pets!**
- **Never leave the hot barbecue unattended.**
- **WARNING! Keep children and pets away!**

**⚠ WARNING:**
- **Do not use spirit or petrol for lighting or re-lighting!**
- **Never use water to extinguish the charcoal.**

**⚠ WARNING:**
**Risk of carbon monoxide poisoning!**
- **Do not use indoors !**

**Information for safe operation of the barbecue**
- **The barbecue must be positioned in a stable and secure surface.**

**Do not use in enclosed areas or on covered areas.**
- **Only use safe lighting materials.**
- **The barbecue should be heated up and the fuel kept red hot at least 30 minutes before it is used for the first time.**

# Preparation

**Before beginning assembly of product, make sure all parts are present. Compare parts with package contents list and hardware contents below. If any part is missing or damaged, do not attempt to assemble the product. Contact customer service for replacement parts.**

**Tools Required for Assembly: Wrench (not included) and Phillips Screwdriver (not included)**

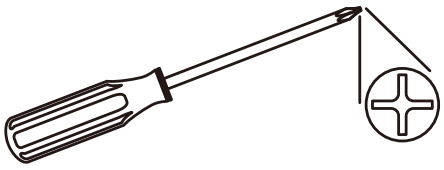



# Components

## Package Contents

| Part | Description | Quantity |
|---|---|---|
| 1 | Smoke Stack Damper | 1 |
| 2 | Smoke Stack | 1 |
| 3 | Meat Hook Rack | 1 |
| 4 | Smoking Chamber | 1 |
| 5 | Firebox Crossover Assembly | 1 |
| 6 | Firebox Crossover Plates | 2 |
| 7 | Firebox Support | 1 |
| 8 | Temperature Gauge | 1 |
| 9 | Smoking Chamber Lid | 1 |
| 10 | Cooking Grates | 5 |
| 11 | Water Pan | 1 |
| 12 | Water Pan Support | 1 |

| Part | Description | Quantity |
|---|---|---|
| 13 | Charcoal Pan | 1 |
| 14 | Water Access Door | 1 |
| 15 | Door Handle | 1 |
| 16 | Side Handle | 1 |
| 17 | S Hooks | 4 |
| 18 | Grease Cup | 1 |
| 19 | Grease Cup Holder | 1 |
| 20 | Long Legs | 2 |
| 21 | Short Leg Front | 1 |
| 22 | Short Leg Back | 1 |
| 23 | Wheel Axle | 1 |
| 24 | Wheels | 2 |

| Part | Description | Quantity |
|---|---|---|
| 25 | Air Vent | 1 |
| 26 | Air Vent Handle | 1 |
| 27 | Ash Drawer Handle | 1 |
| 28 | Ash Drawer | 1 |
| 29 | Firebox Base | 1 |
| 30 | Firebox Top | 1 |
| 31 | Firebox Lid Stop | 1 |
| 32 | Firebox Lid | 1 |
| 33 | Firebox Lid Handle | 1 |
| 34 | Firebox Charcoal Grate | 1 |
| 35 | Firebox Cooking Grates | 2 |

# Components

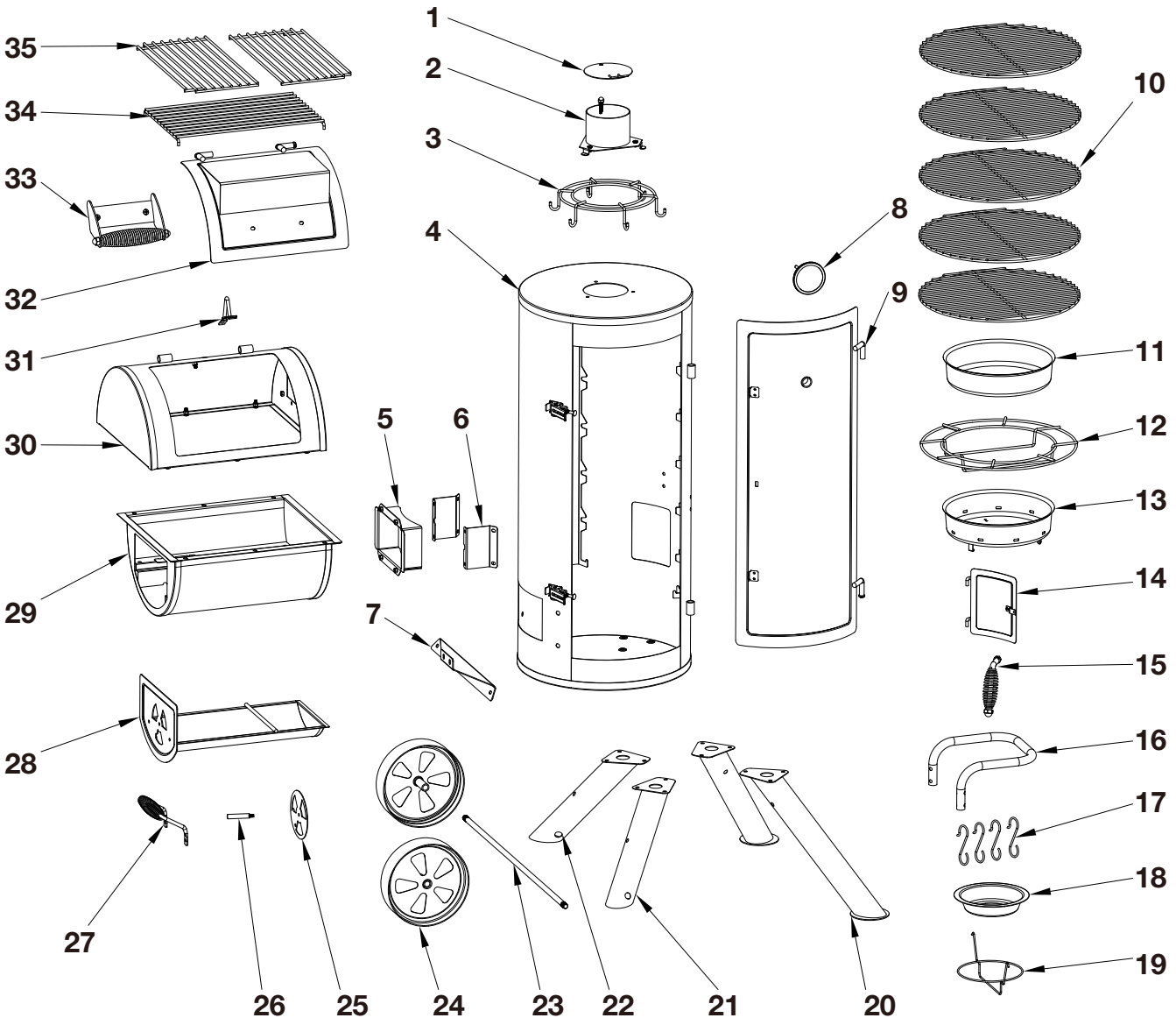


| M6*30 | M5*12 | M6*12 | M6 | Locking Nut M6 | M5 | M12 |
|---|---|---|---|---|---|---|
|  |  |  |  |  |  |  |
| 4x | 2x | 41x | 8x | 1x | 2x | 2x |

# Assembly Instructions

**1** Loosen the screws and remove the lid

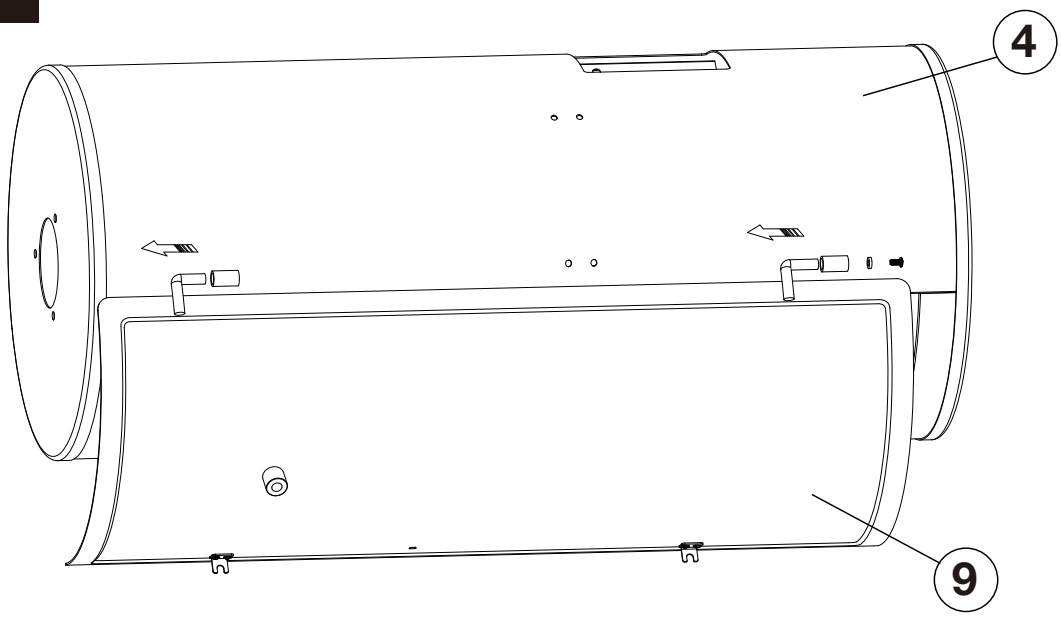


**2**

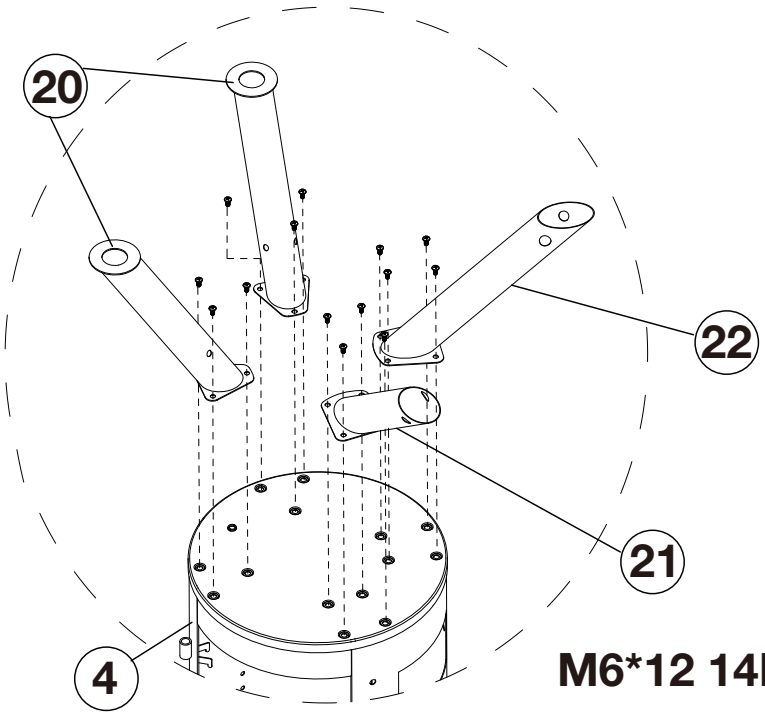


M6*12 14PCS

# Assembly Instructions

**3**

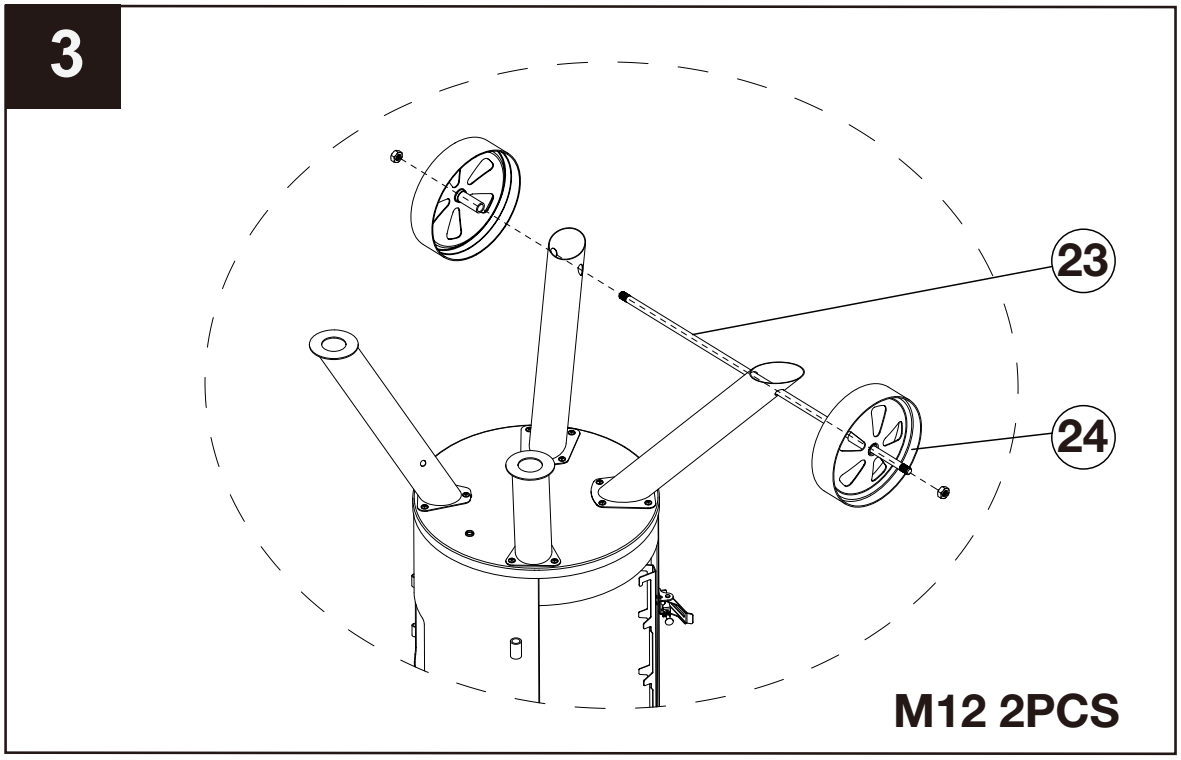


**4**

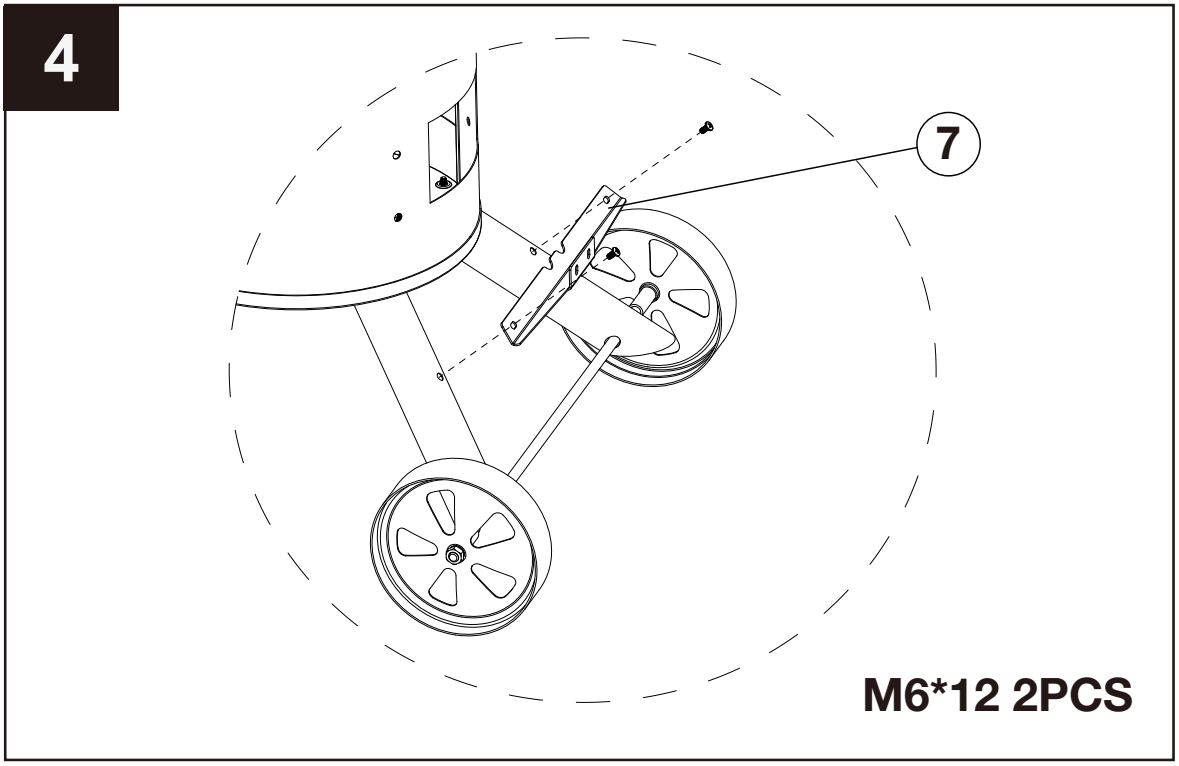

# Assembly Instructions

**5**

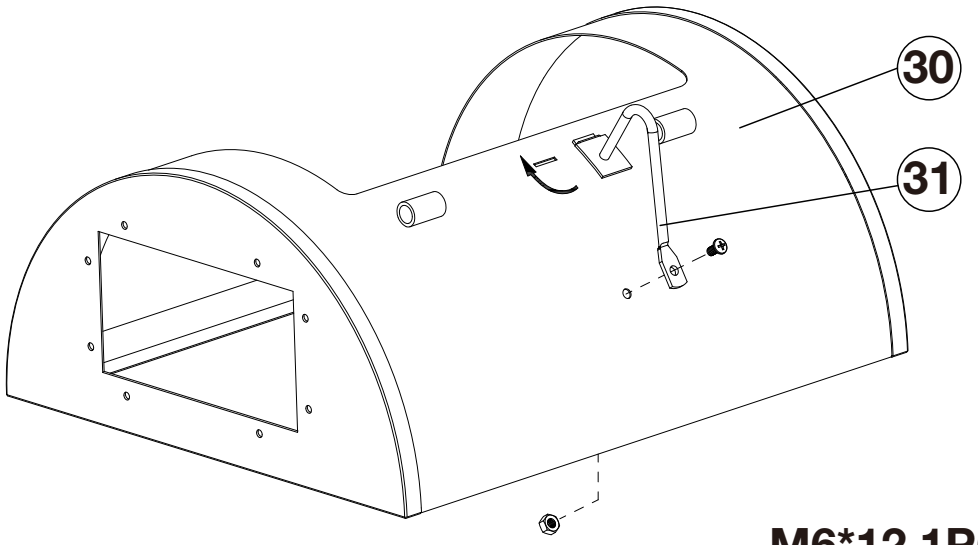


**M6*12 1PC**
**M6 1PC**

**6**

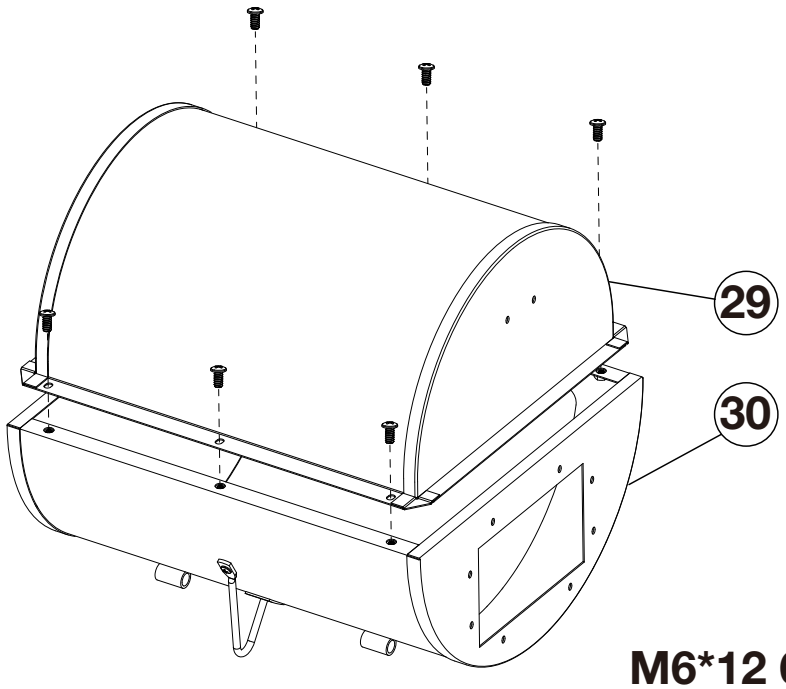


**M6*12 6PCS**

# Assembly Instructions

**7**

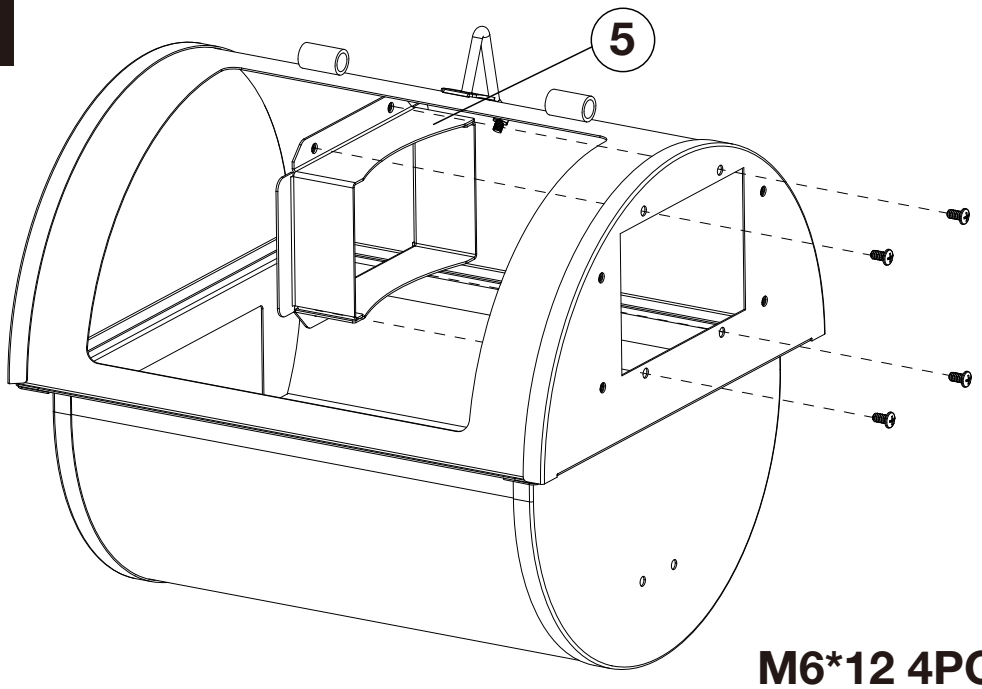


M6*12 4PCS

**8**

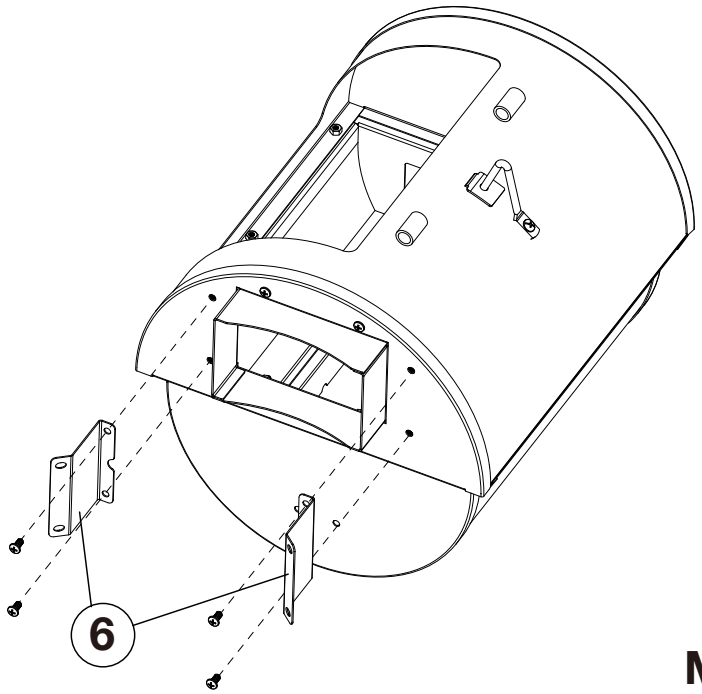


M6*12 4PCS

# Assembly Instructions

**9**

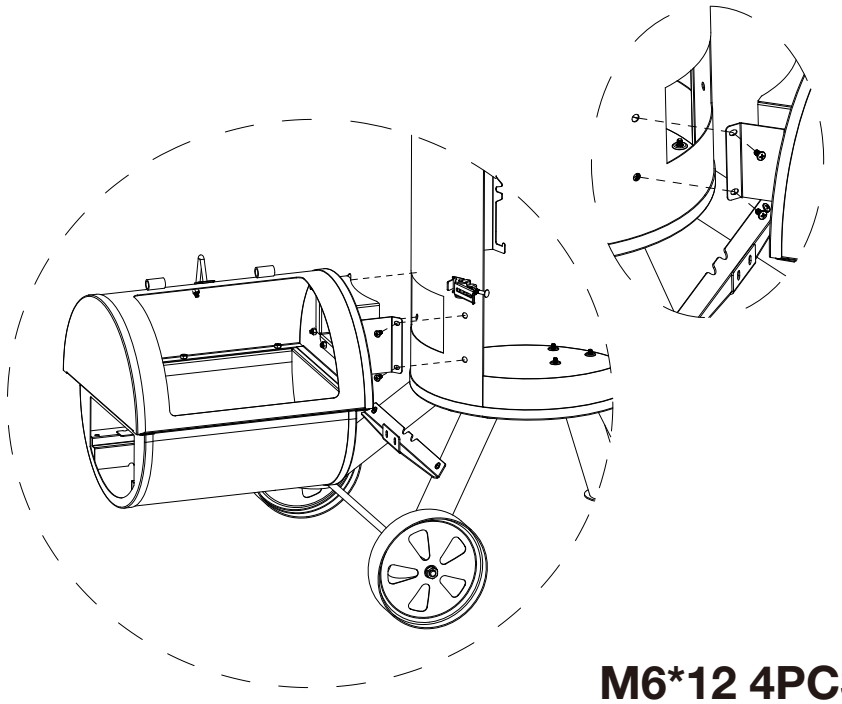

**M6*12 4PCS**

**10**

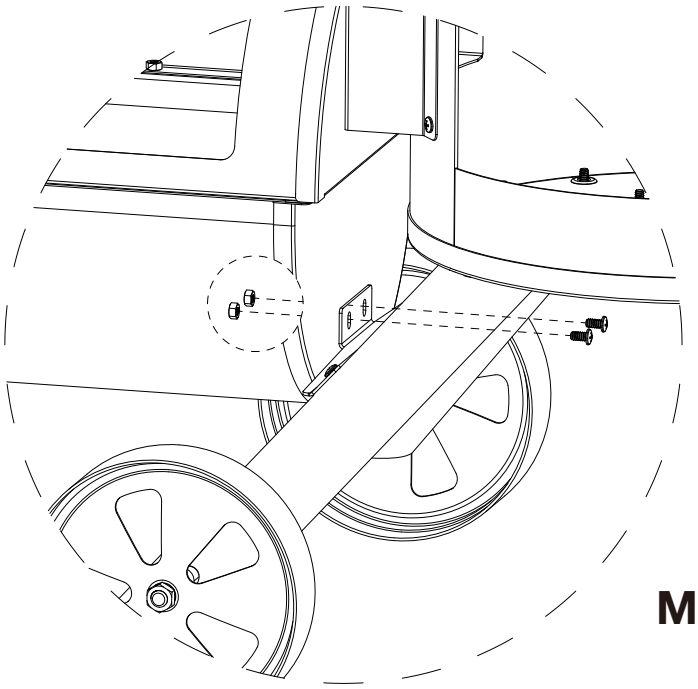

**M6*12 2PCS**

**M6 2PCS**

# Assembly Instructions

**11**

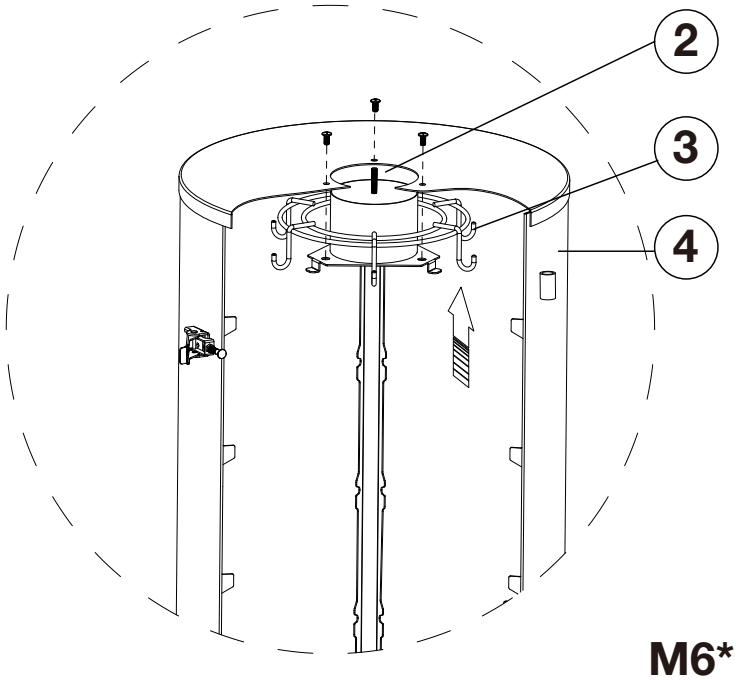


**M6*12 3PCS**

**12**

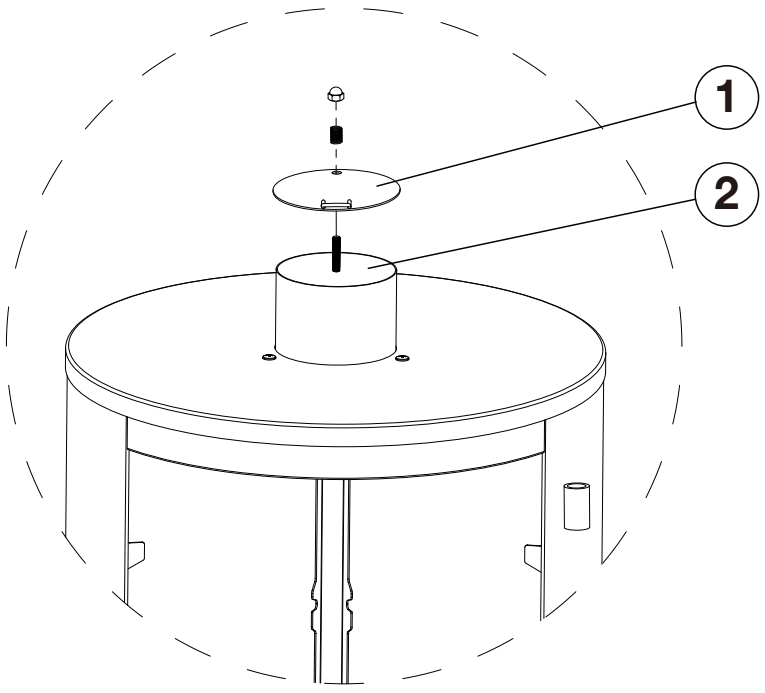

# Assembly Instructions

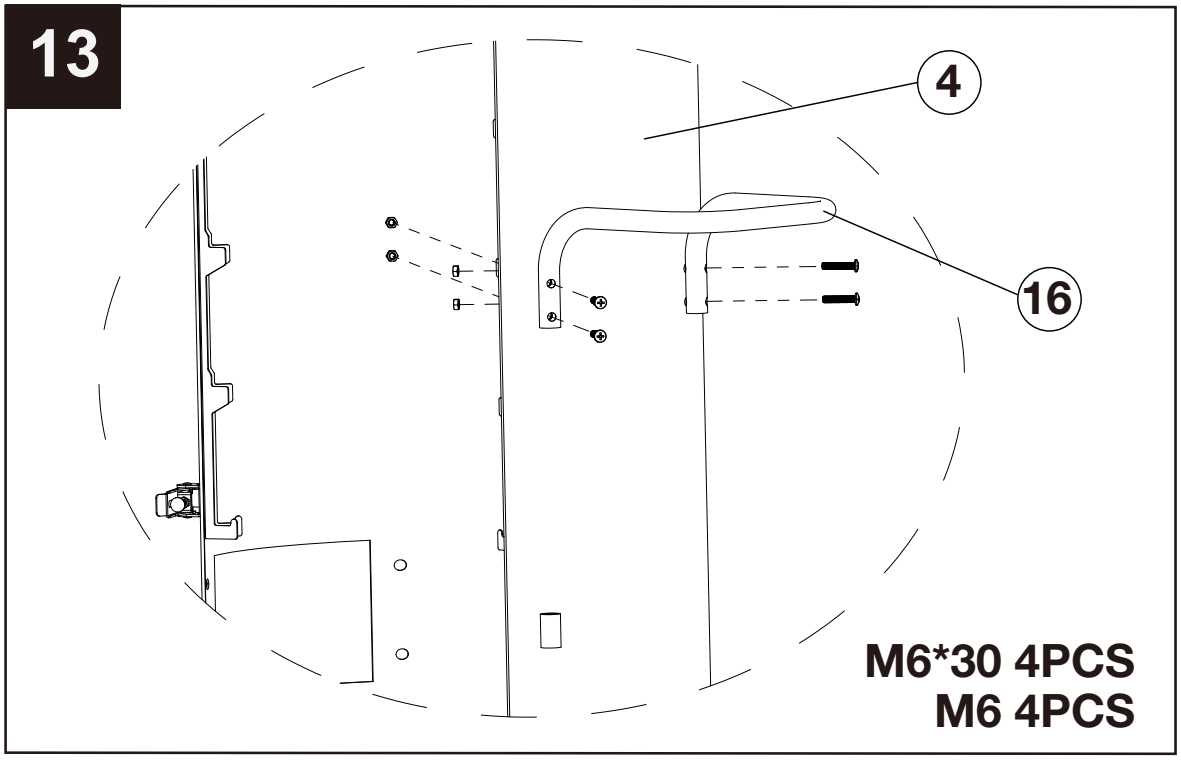


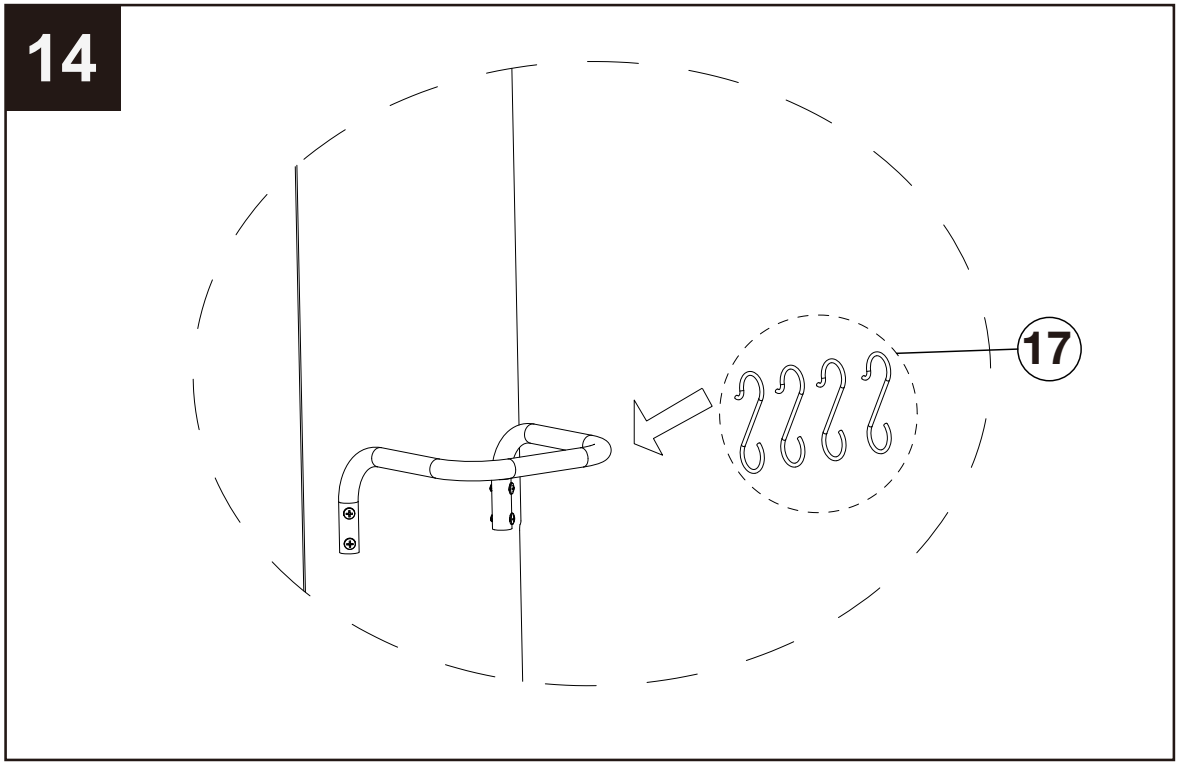

# Assembly Instructions

**15**

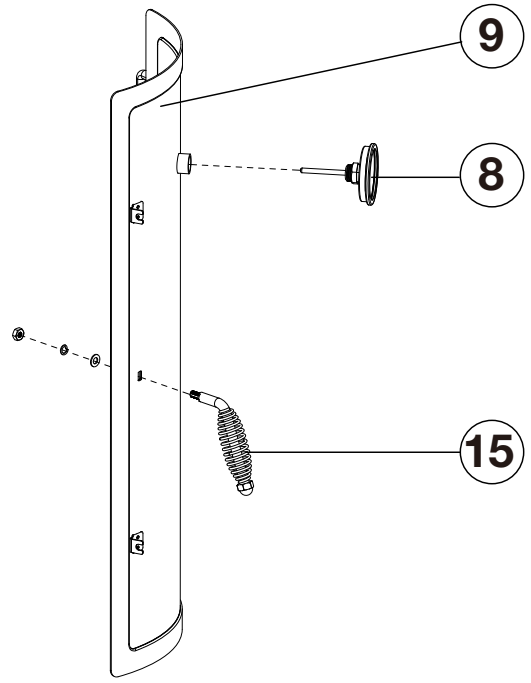


**16**

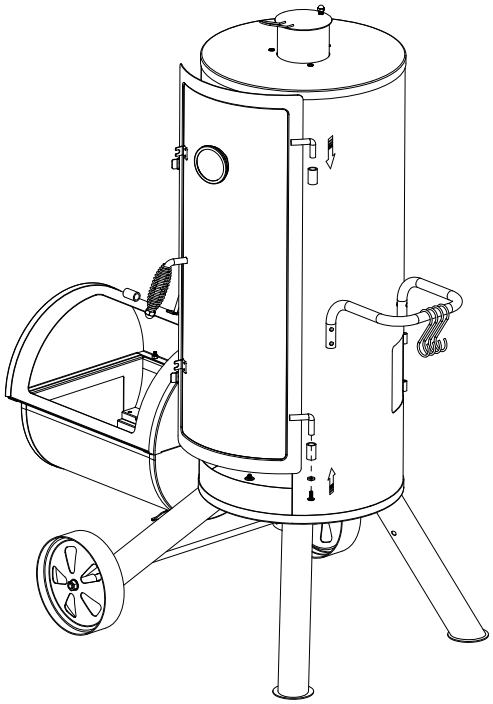

# Assembly Instructions

**17**

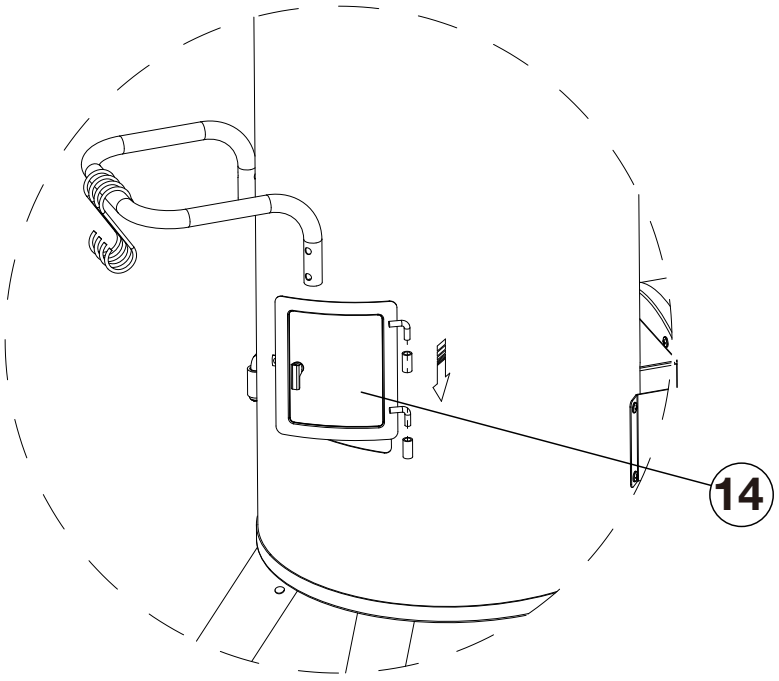


**18**

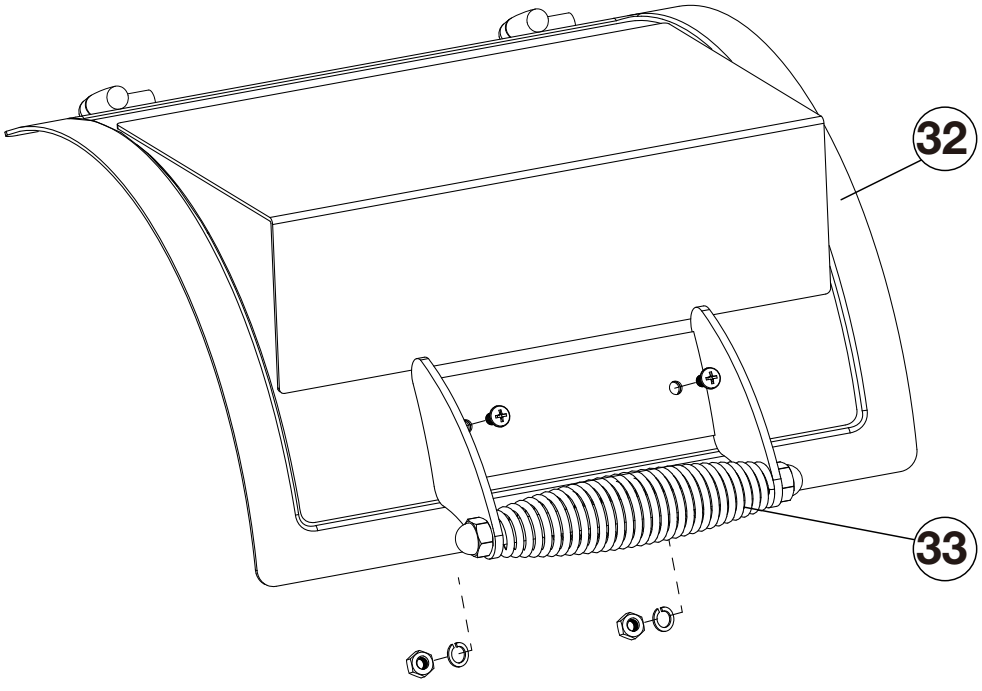

# Assembly Instructions

## 19

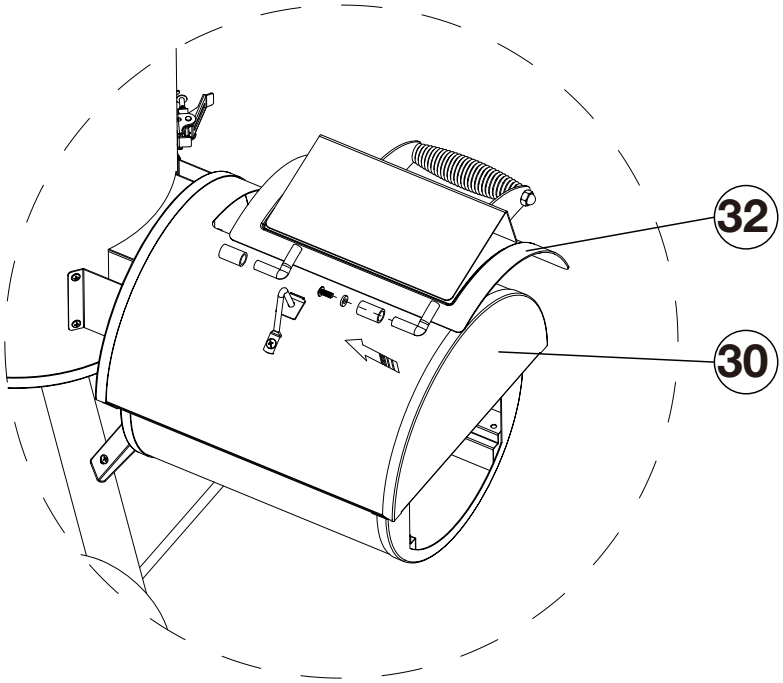


## 20

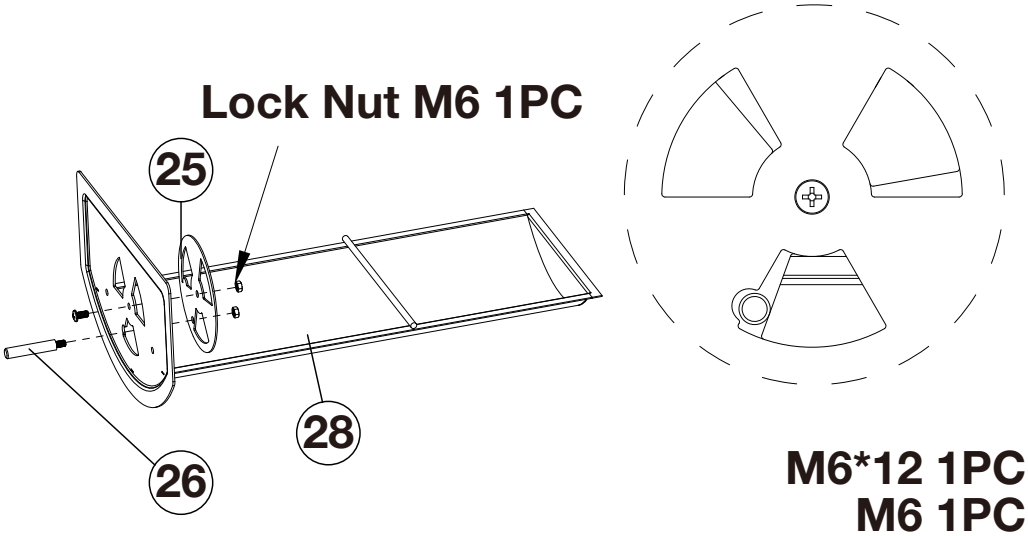


M6*12 1PC
M6 1PC
Lock Nut M6 1PC

# Assembly Instructions

**21**

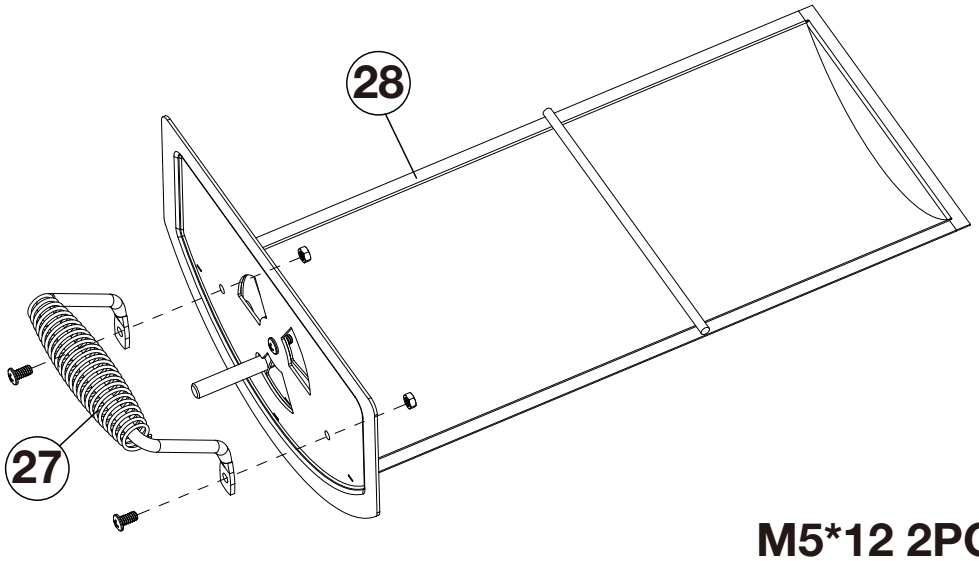


**M5*12 2PCS**
**M5 2PCS**

**22**

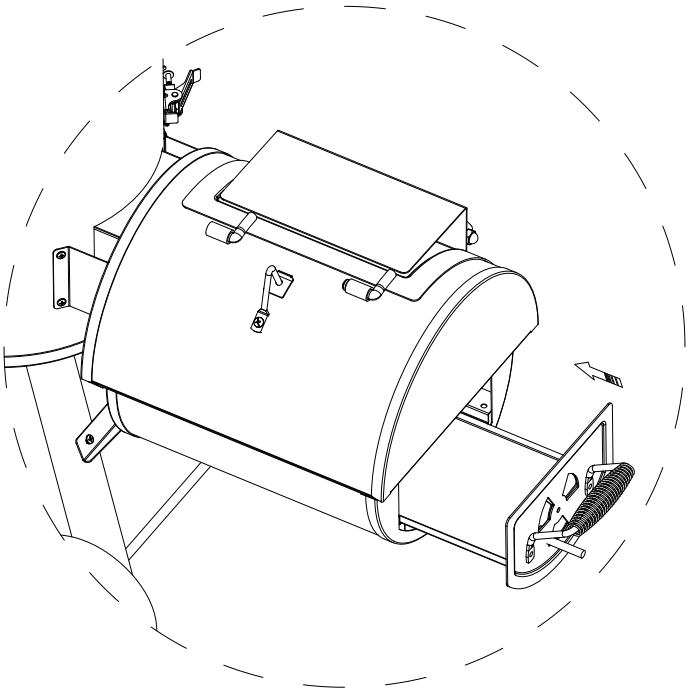

# Assembly Instructions

**23**

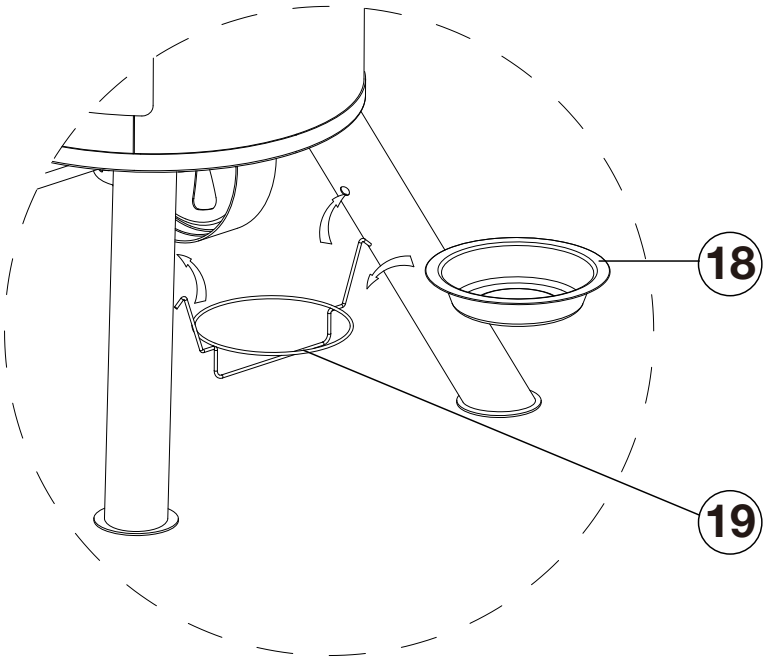


**24**

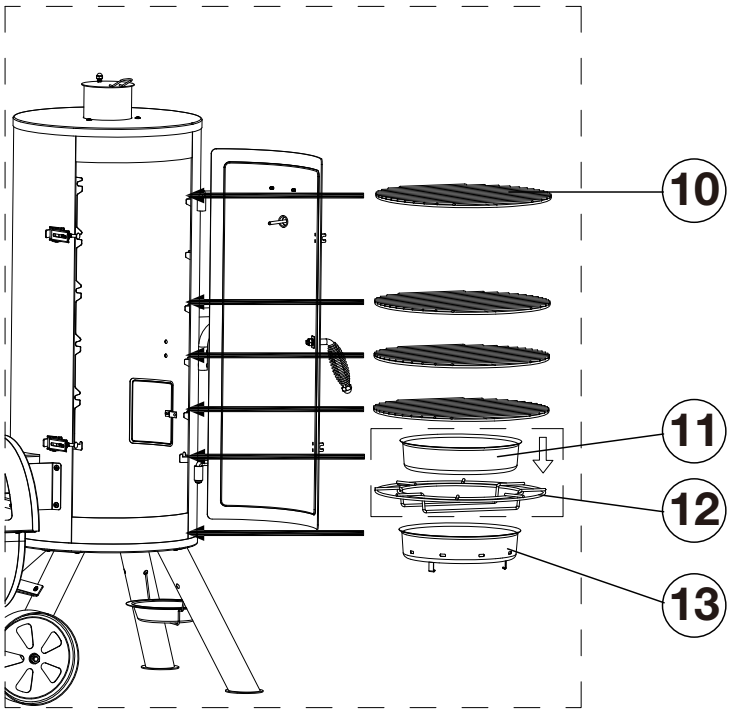

# Assembly Instructions

**25**

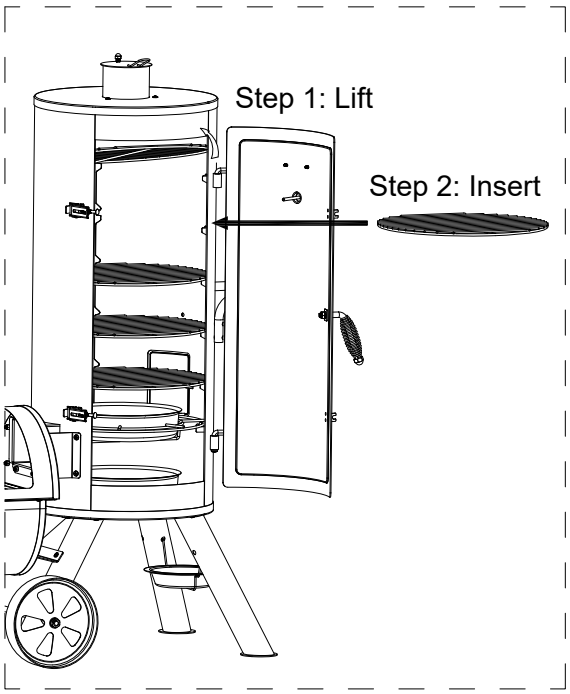


**26**

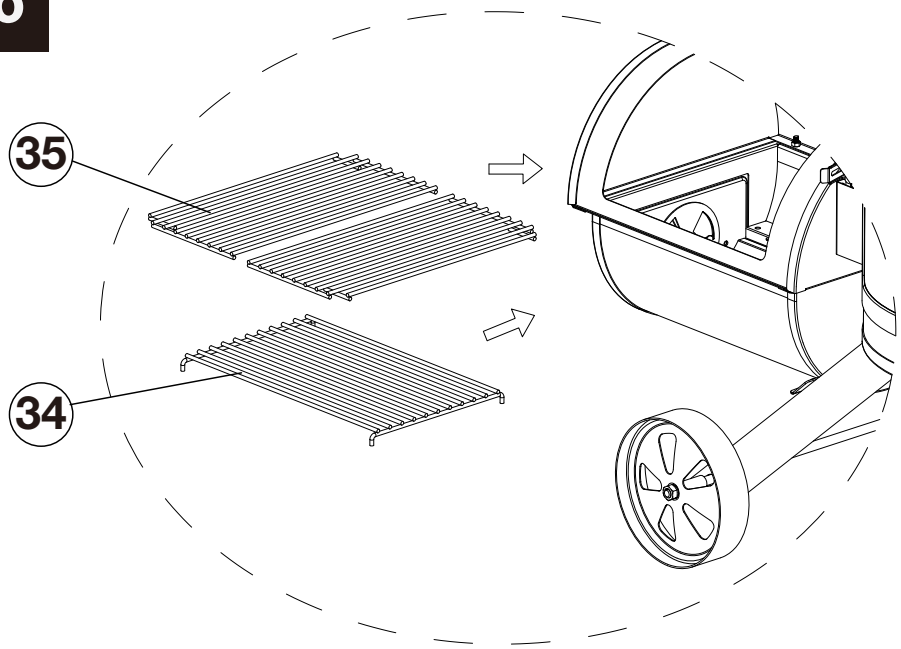

# Igniting the Fuel

**⚠ WARNING:**
**Risk of burning!**
**When petrol or white spirits are ignited uncontrollable heat can develop as a result of deflagration. You should therefore only use harmless fuel.**

1. Use quality products.
2. Stack some of the charcoal or briquettes on the charcoal grate (34).
3. Place one or two solid firelighters on top of the layer of charcoal or briquettes. Ignite these firelighters using a long match.
4. Let the solid lighters burn for 2 to 4 minutes. Then fill the charcoal grate (34) slowly with more charcoal or briquettes .The maximum amount of charcoal is 1 kg.
5. A white layer of ash should develop on the fuel after approximately 15 to 20 minutes. This indicates that the optimal grilling condition has been reached. Distribute the fuel evenly on the charcoal grate (34) using a suitable metal tool.
6. Insert the greased grill and then you can start barbecuing.

# Cleaning and Maintenance

**⚠ WARNING:**
**Risk of burning!**
**Allow the barbecue to cool down completely before cleaning it.**
**Never use water to quench the hot barbecue. This could result in burning or scalding.**

**Occasional cleaning is necessary to preserve the beautiful appearance of the barbecue. Do not use any scouring agents.**

1. A rinsing cloth and some water with a commercial detergent is sufficient for the normal cleaning process.
2. If the enamelled parts are heavily soiled, use a commercial enamel cleaning agent (oven cleaner). Observe the manufacturer's instructions for the cleaning agent being used.
3. Clean the grill using some washing-up liquid and a rust proof cleaning pad.

# Environmental Protection & Disposal

**Pay attention to cleanliness when using the barbecue and dispose of waste in a clean and safe manner. As a general rule, only dispose of waste in designated metal or non-flammable containers. The local regulations for disposal apply.**

# Warranty

## LIMITED WARRANTY

**This warranty is a limited warranty, and applies to the original purchase is required. This is a residential warranty and does not apply to commercial use. This collection carries a (1) year limited warranty and is valid from original date of purchase to the original owner (proof of purchase required).**

## WHAT IS COVERED

**We warrant the frame to be free of Manufacturing defects to the original purchaser for one year.**

## WHAT IS NOT COVERED

**This warranty does not cover commercial use, hardware, acts of nature, fire, freezing and abusive.**
**In addition, purchased parts are not covered under this warranty.**
**We reserve the right to make substitutions with similar merchandise, if the model in question is no longer in production.**

**For a copy of our full limited warranty, please contact our customer service team below.**

Questions, problems, missing parts? Before returning to the store
please contact our Customer Service

**service@getintouchservice.com**

**1-877-606-2818**

**Monday- Friday PST 09:00AM-16:30PM**