Assembly instruction

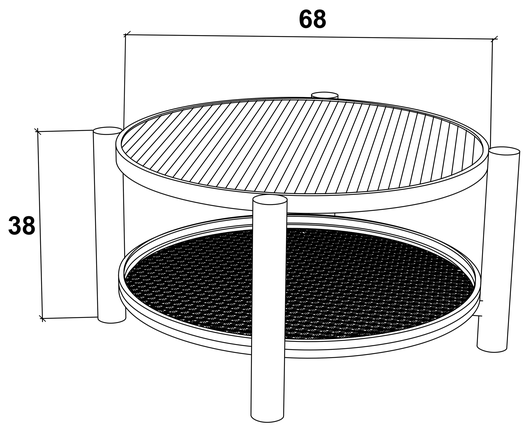

A

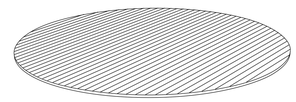

B

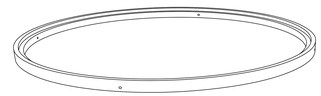

C

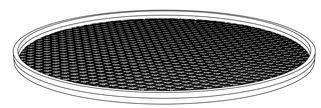

D-

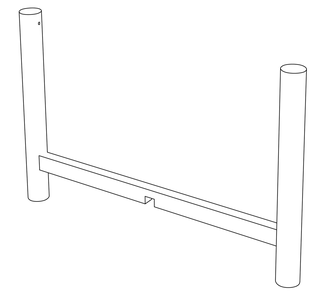

D-2

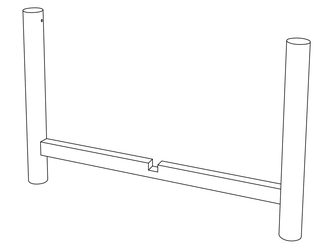

E

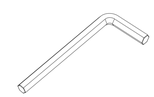

F

Step one

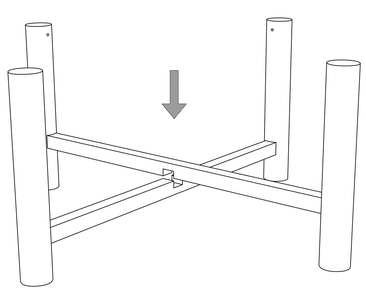

Step two

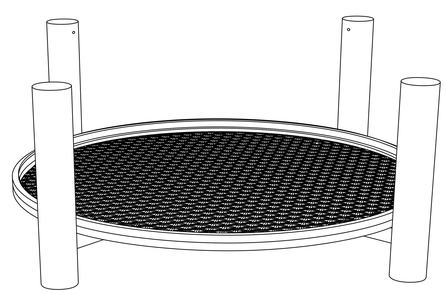

Step three

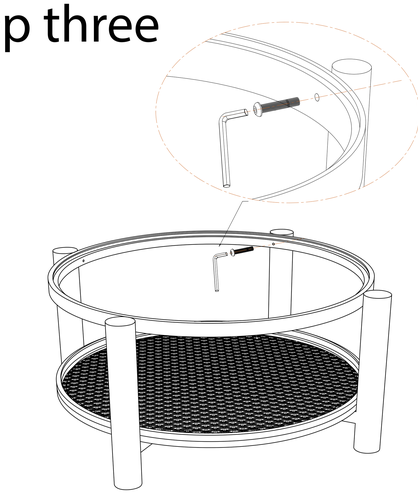
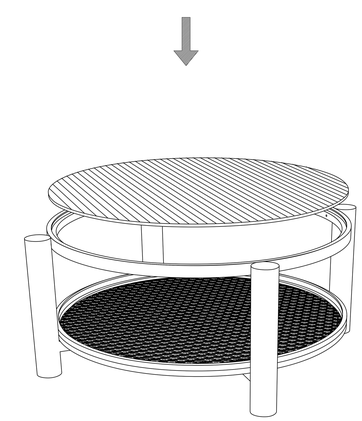
Step four