72″ Buffet Server with Stone Top Production 12-28-23
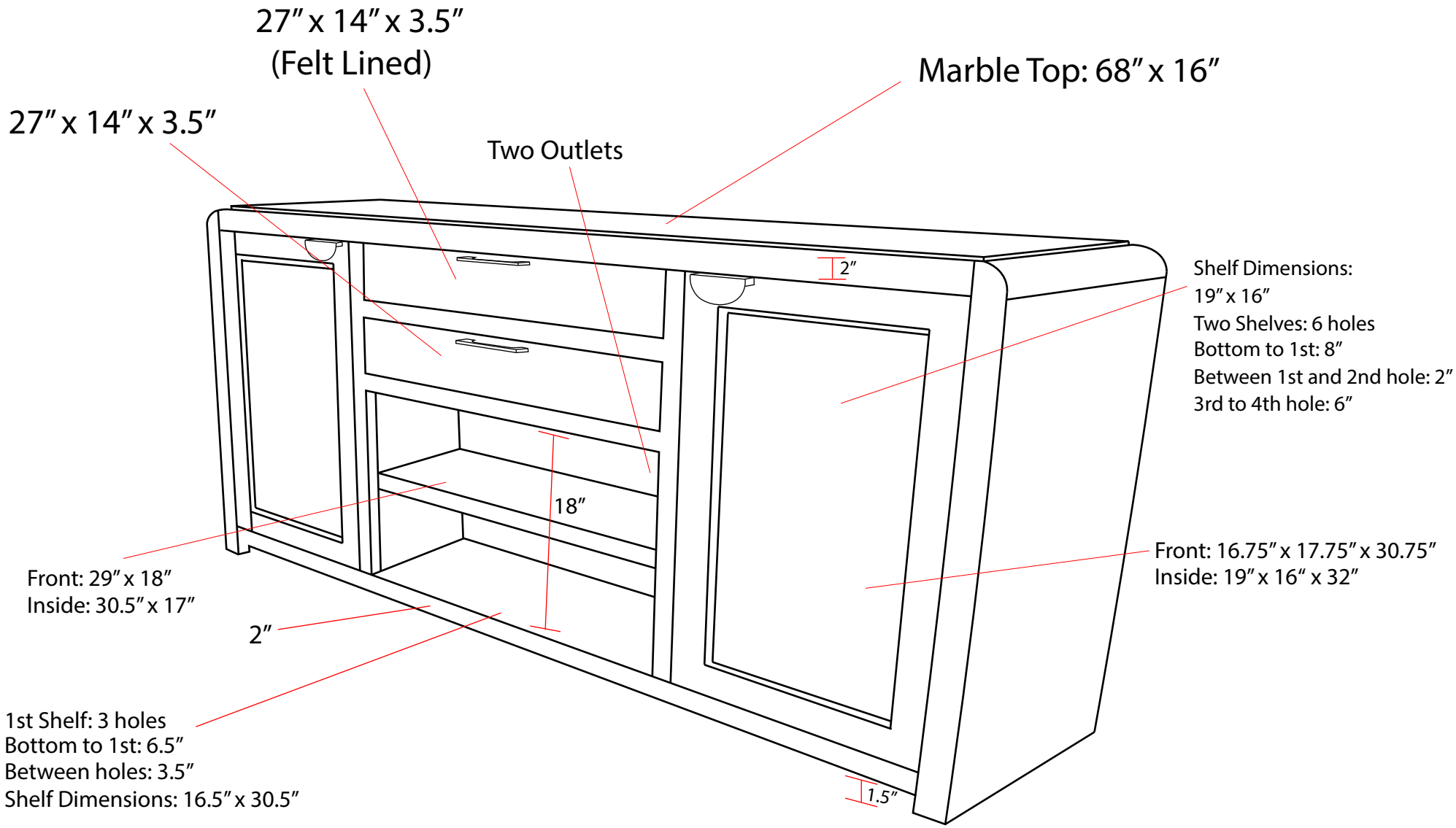
Overall: 72″ x 18″ x 36″