HLG182

Version:1.0

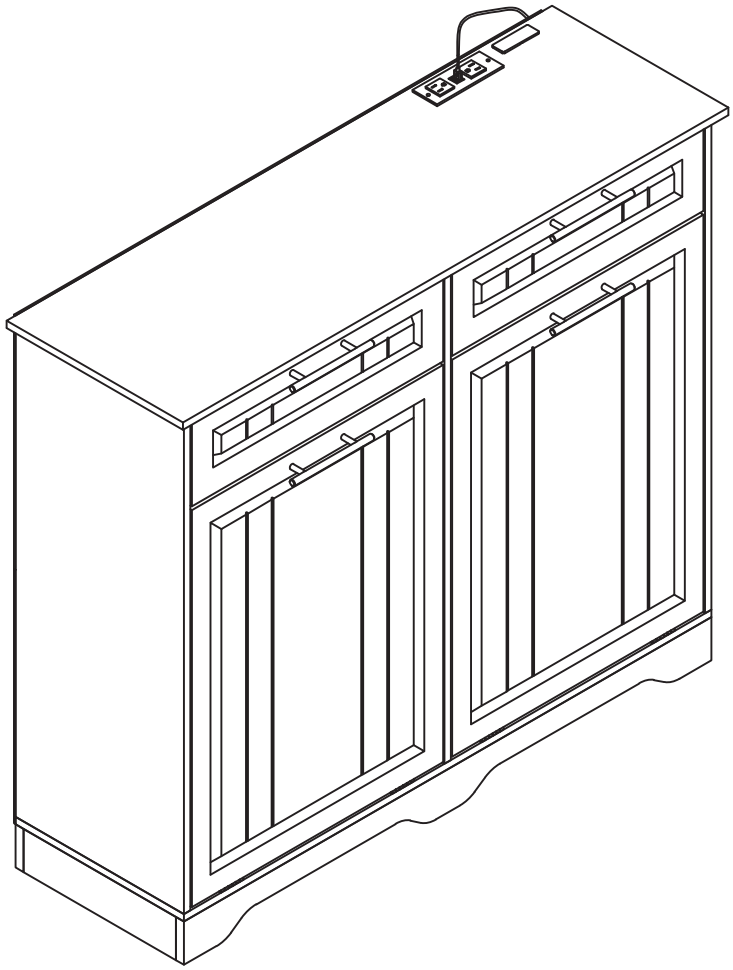

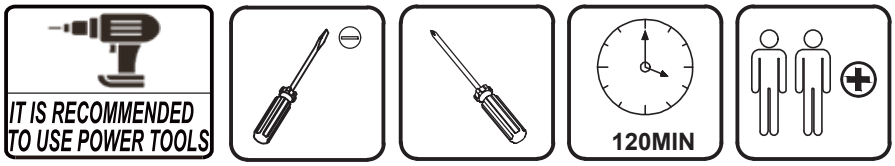

As this item contains many parts, please read the installation instruction carefully before installation . Please use tools properly and carefully.
If you have any questions about the product and installation, please contact us.

support@anymaple.com

Our professional after-sales team will serve you online all day.

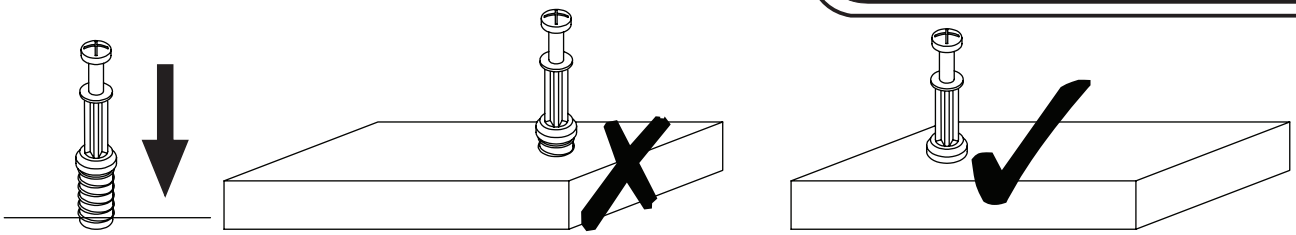

EN_QUICKFIT: Tighten quickfit until shoulder is flush with panel.Do not overtighten or undertighten.

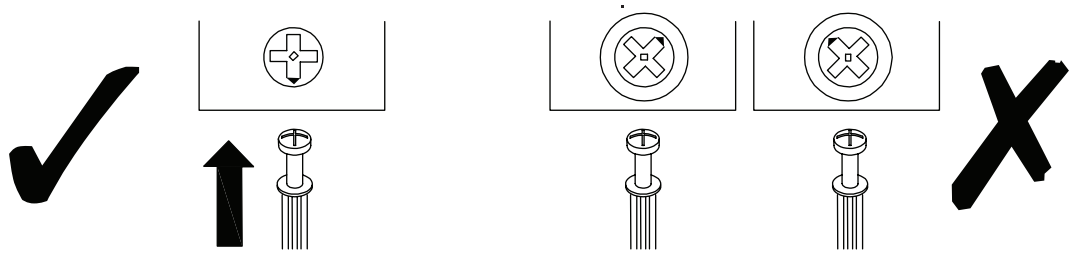

EN_CAM LOCK: When fitting cam lock, ensure starting position is correct before you insert connecting quickfit.

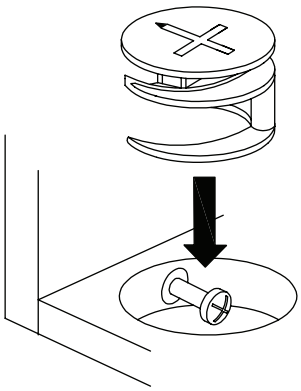

EN_ Quickfit head should be in the centre of the cam lock when the two panels are joined.
Cam lock should be inserted before quickfit.

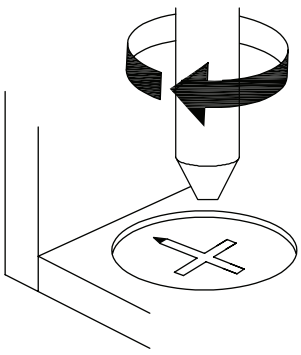

EN_ Turn cam lock clockwise to tighten.

NO.	PARTS	QTY	SPARE
①	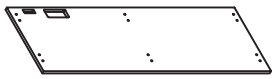	x1	
②	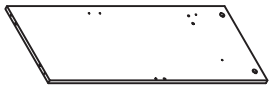	x1	
③		x1	
④		x1	
⑤	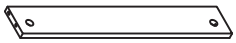	x2	
⑥		x1	
⑦		x1	
⑧		x1	
⑨		x1	
⑩	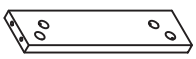	x2	

NO.	PARTS	QTY	SPARE
⑪	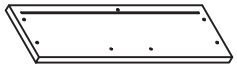	x2	
⑫	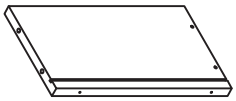	x2	
⑬		x2	
⑭		x2	
⑮		x2	
⑯	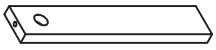	x2	
⑰	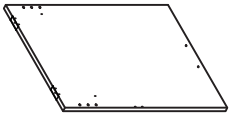	x2	
⑱	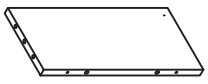	x2	
⑲		x2	
⑳	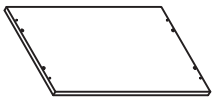	x2	

NO.	PARTS	QTY	SPARE
㉑	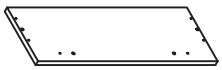	x2	
㉒		x1	
㉓	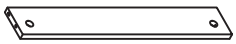	x2	
	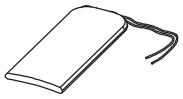 Hardware Kit	x1	

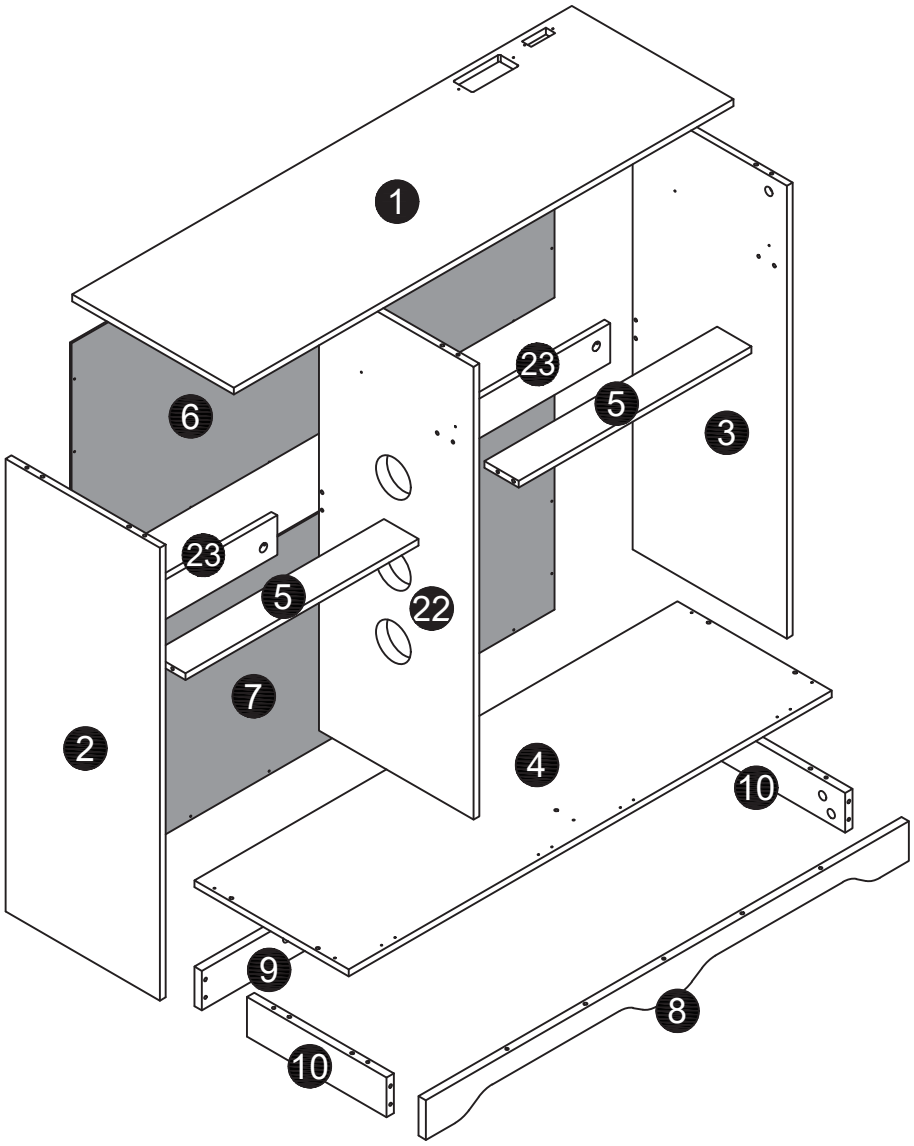
1
23
6
5
3
23
5
22
7
2
4
10
9
8
10

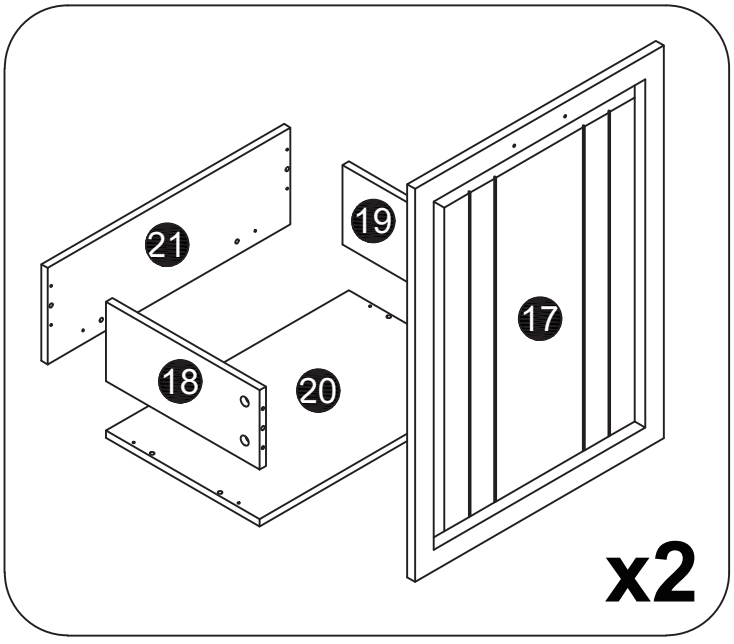
21
19
17
18
20
x2

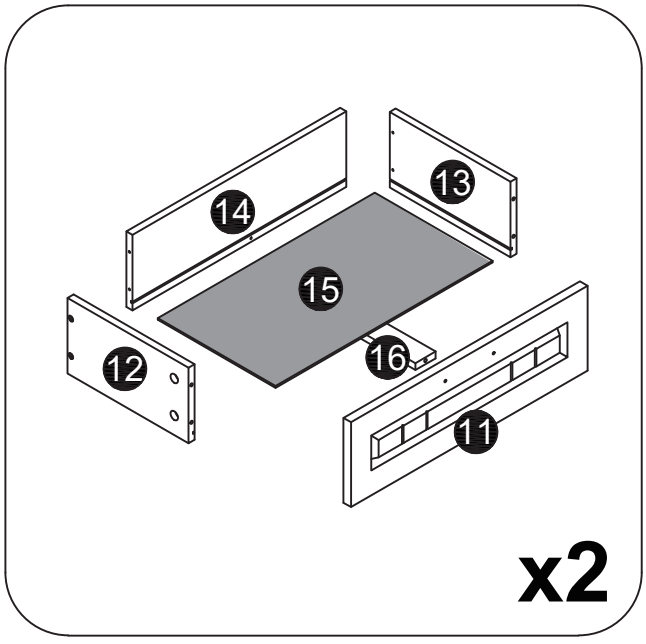
14
13
15
12
16
11
x2

HARDWARE

A x46 Ø6x35mm +3(spare) 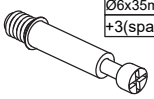	B x46 Ø15x10mm +3(spare) 	C x52 Ø6x30mm +3(spare) 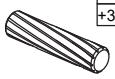	D x36 Ø4x35mm +3(spare) 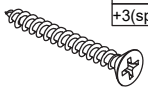	E x54 Ø3.5x12mm +5(spare) 	F x4 Ø4x18mm F-1 F-2 
G x2 	H x4 	I x2 I-2 I-1 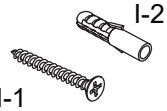	J x28 Ø3x12mm +2(spare) 	K x6 	L x2 L-2 L-1 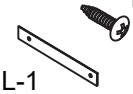
M x1 M-1 M-2 	N x1 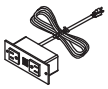	O x2 Ø3.5x12mm 	P x4 		
CL x2 L250mm 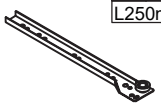	CR x2 L250mm 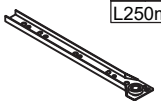	DL x2 L250mm 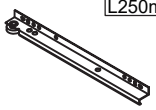	DR x2 L250mm 		

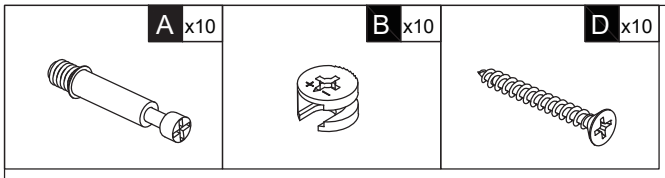

01

x2

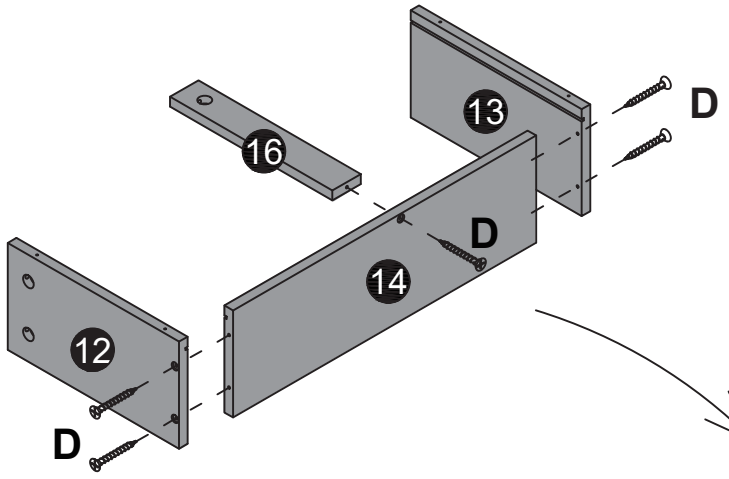

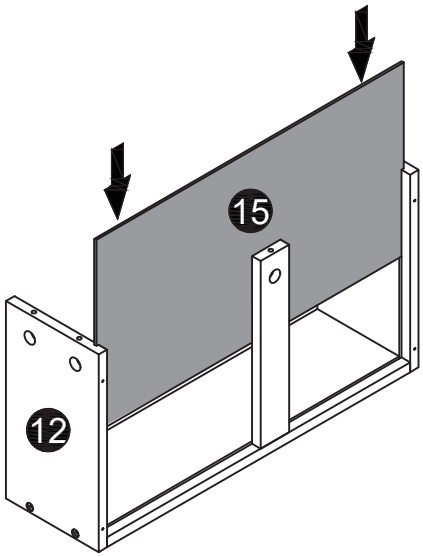

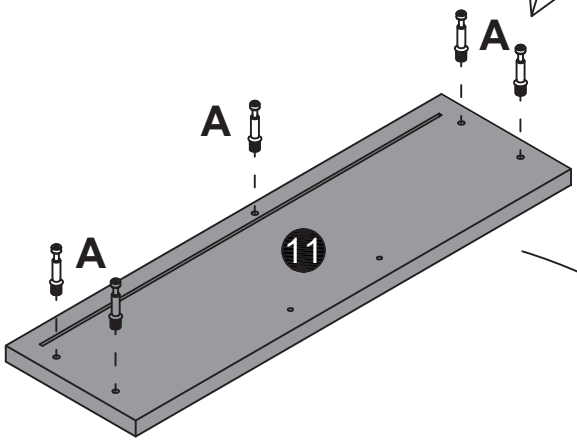

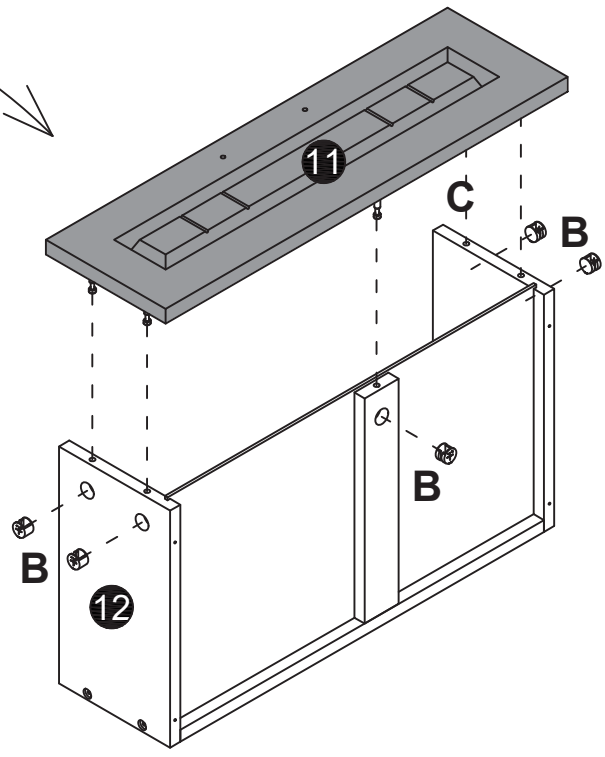

E x8	F x2	DL x2	DR x2
	F-1  F-2 	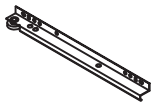	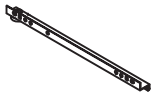

x2

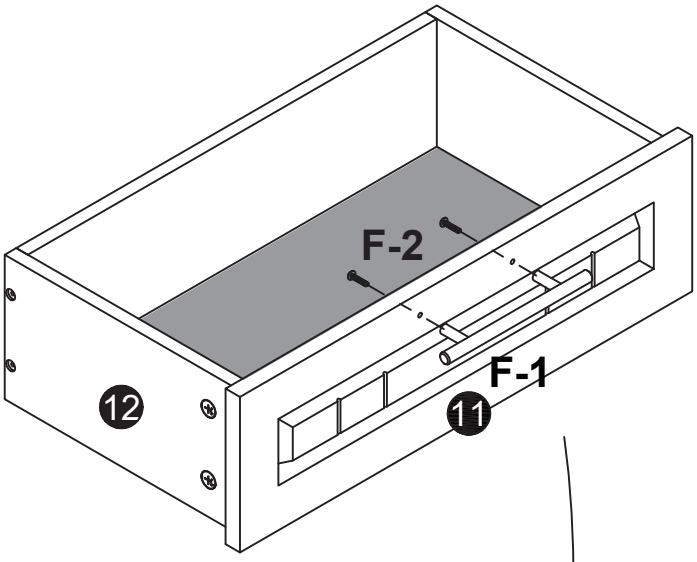

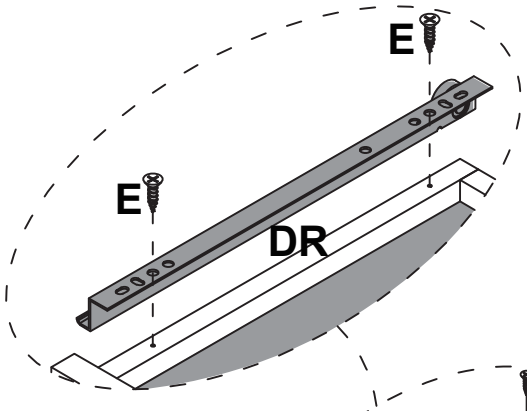

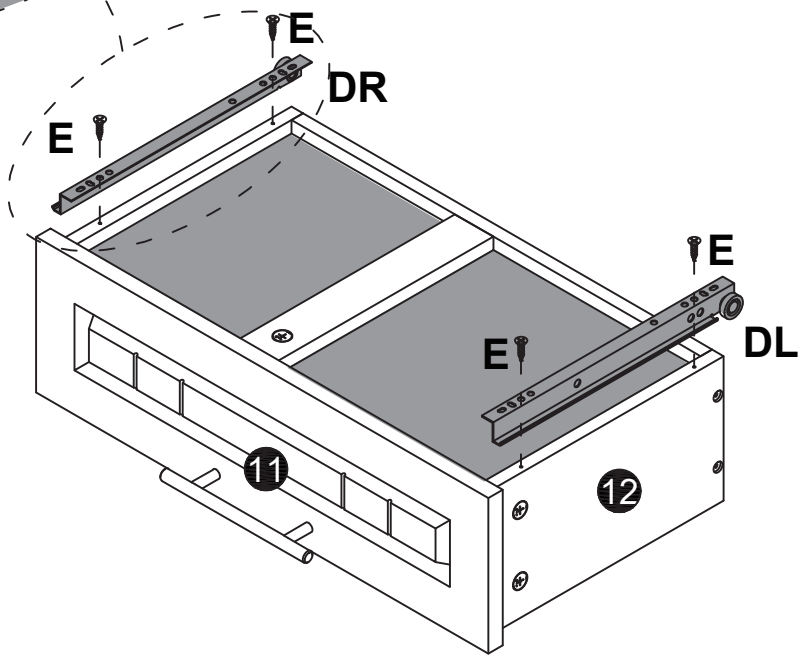

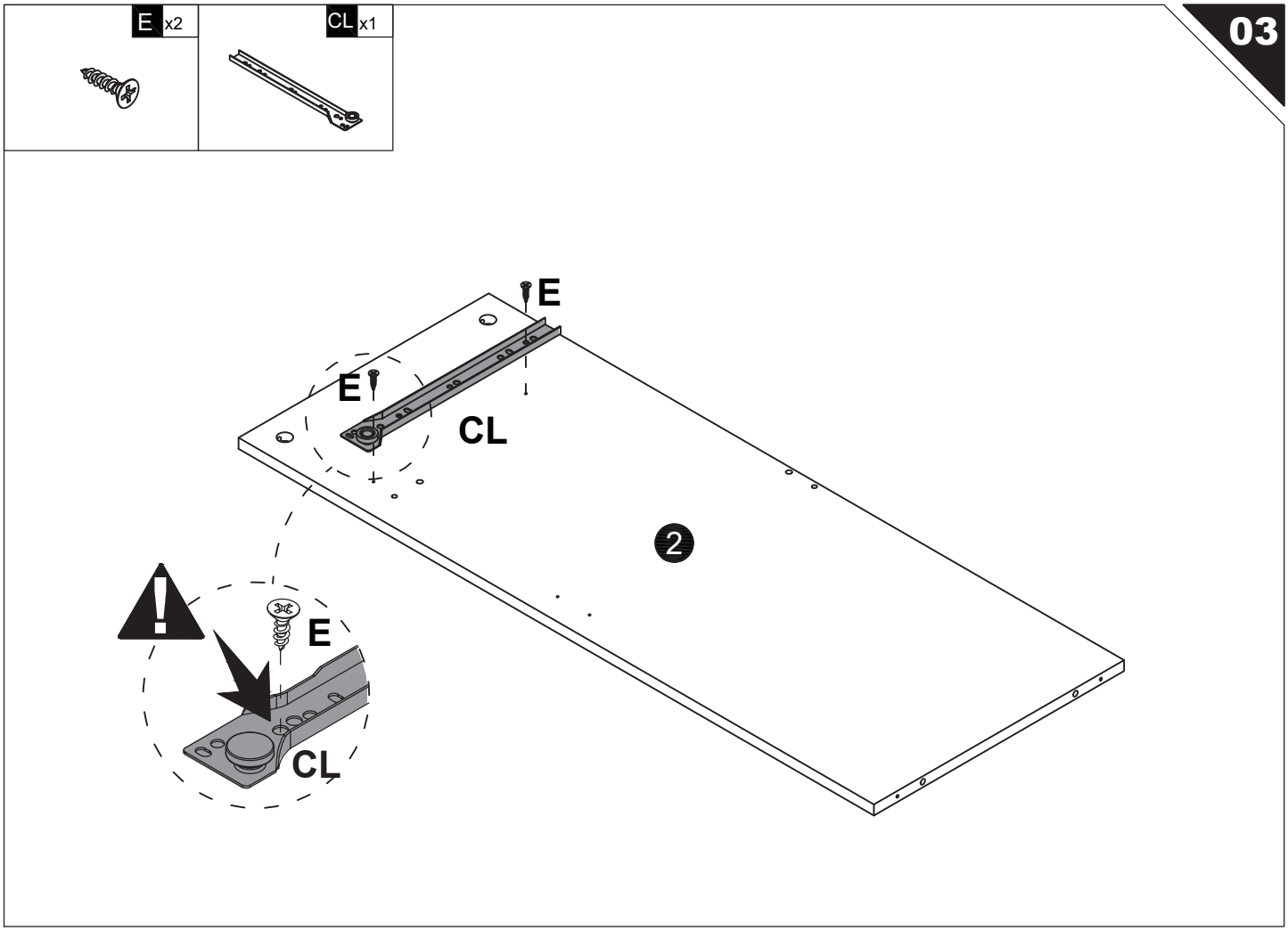
03
E x2
CL x1
E
E
CL
2
E
CL

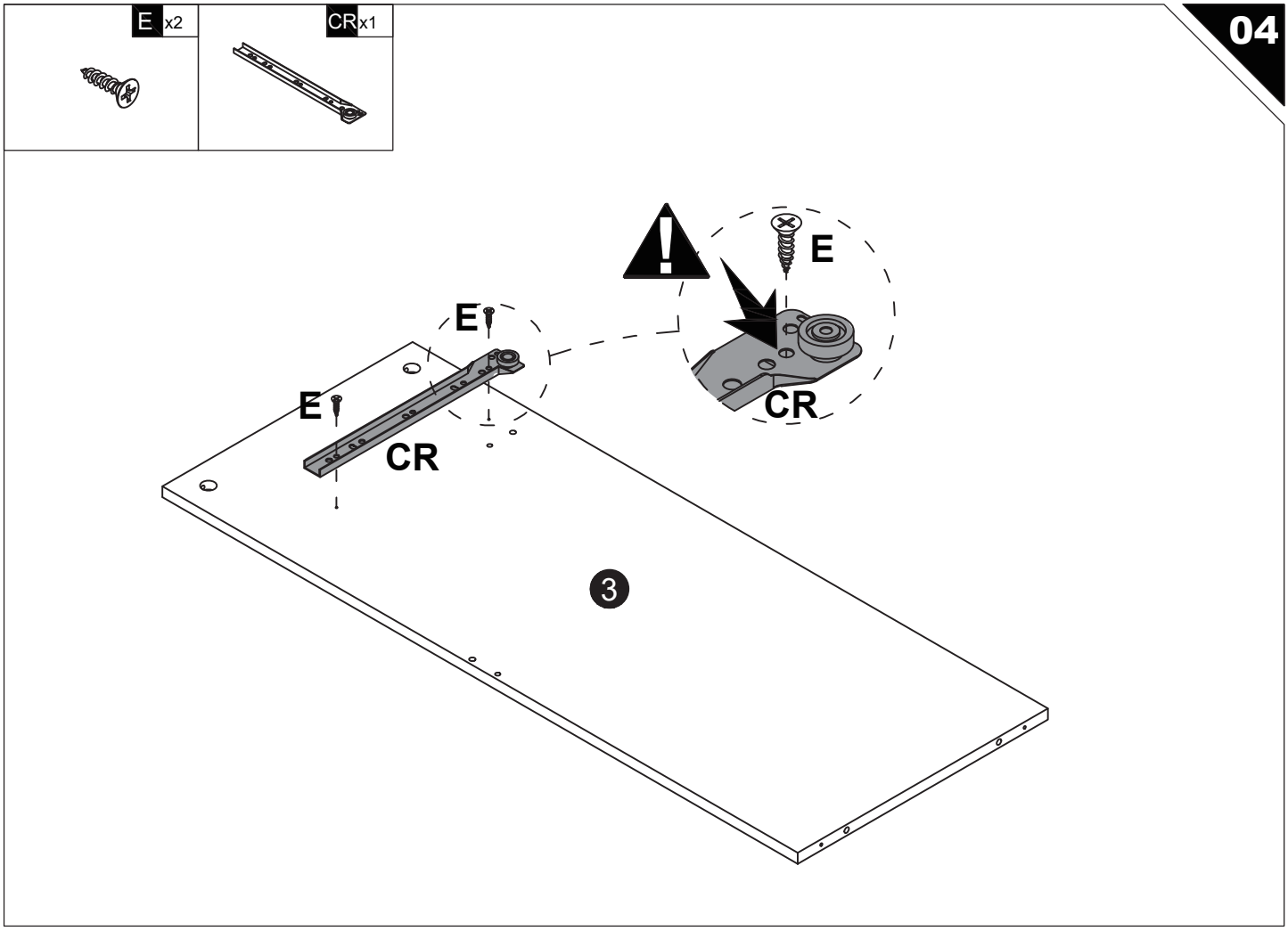
04
E x2
CR x1
E
E
E
CR
CR
3

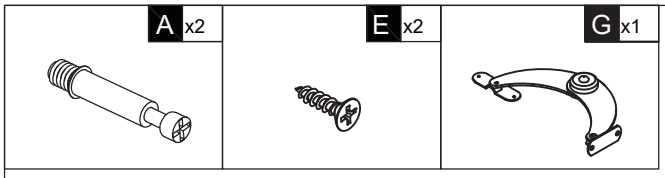

05

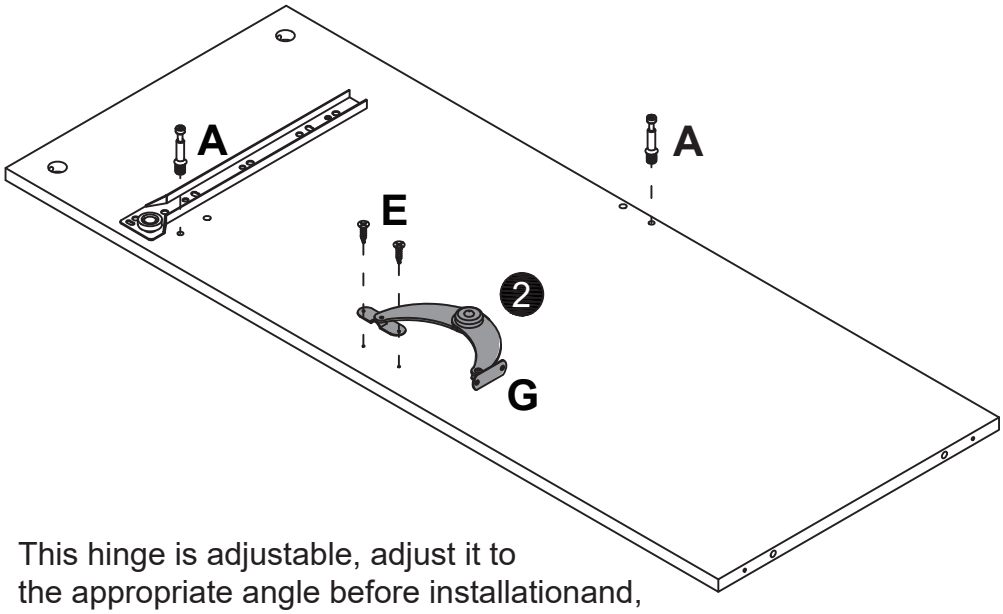

This hinge is adjustable, adjust it to
the appropriate angle before installationand,
it will make a clicking sound when adiusting the angle.

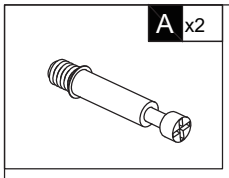

06

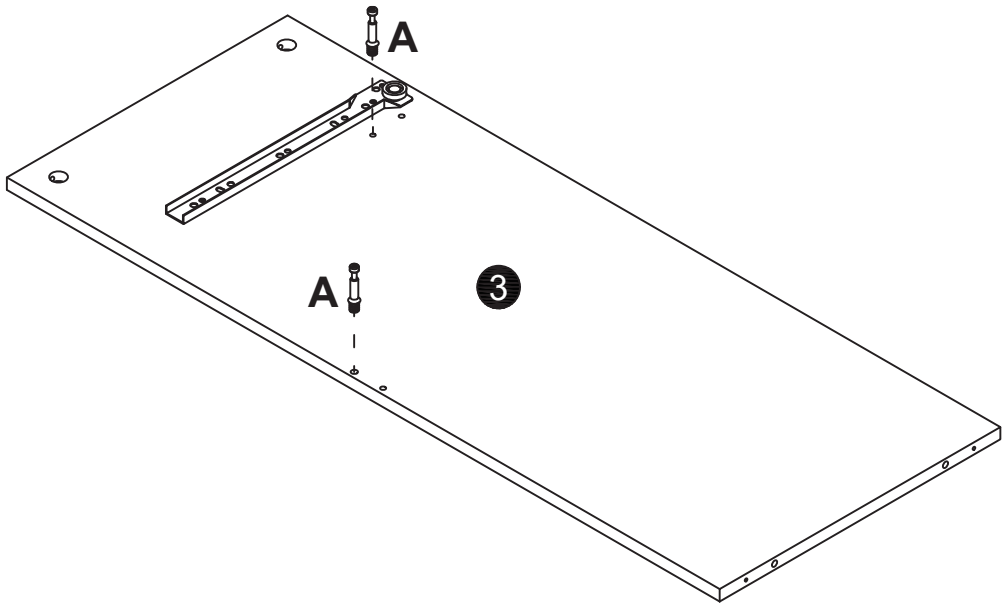

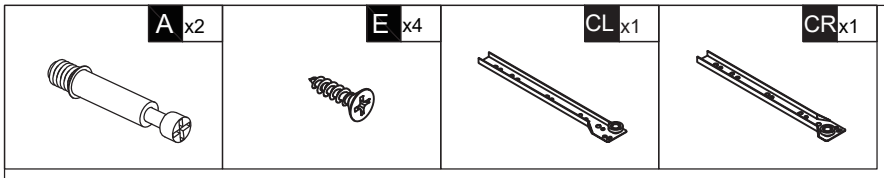
A x2
E x4
CL x1
CR x1

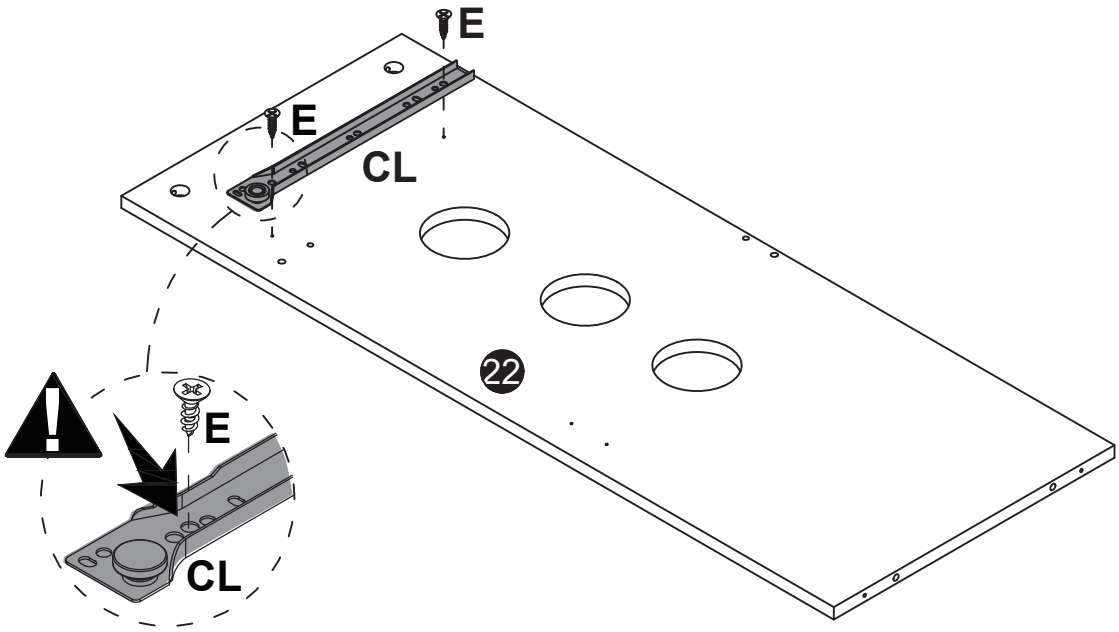
E
E
CL
22
E
CL

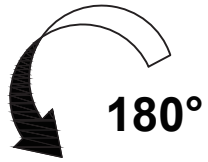
180°

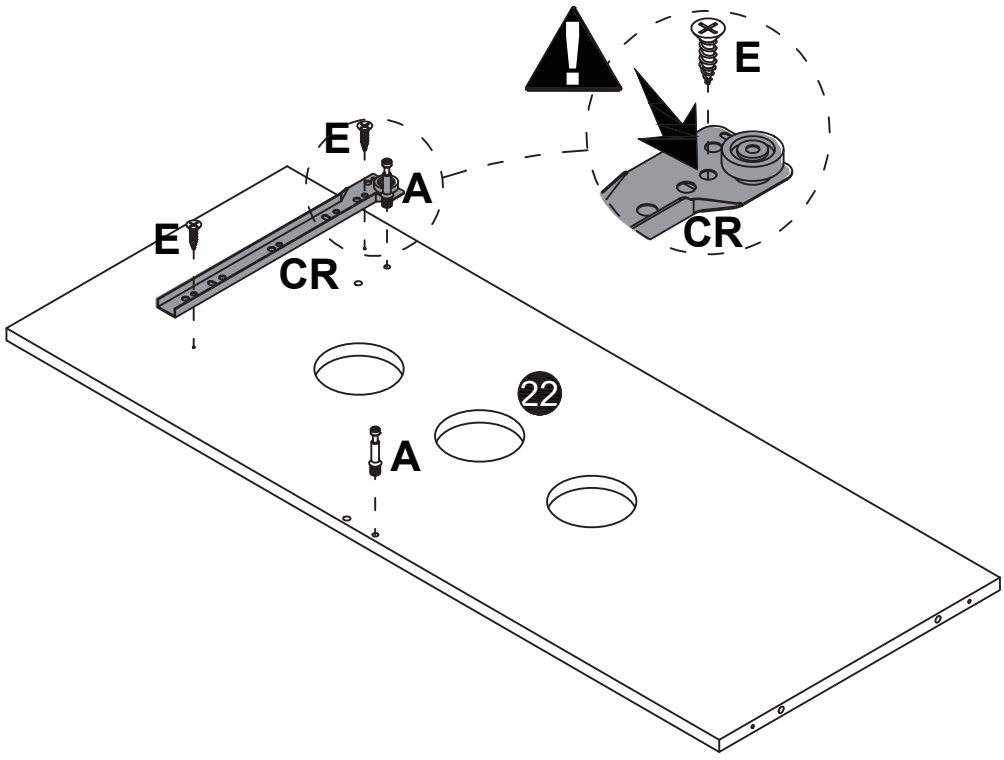
E
E
A
E
CR
CR
22
A

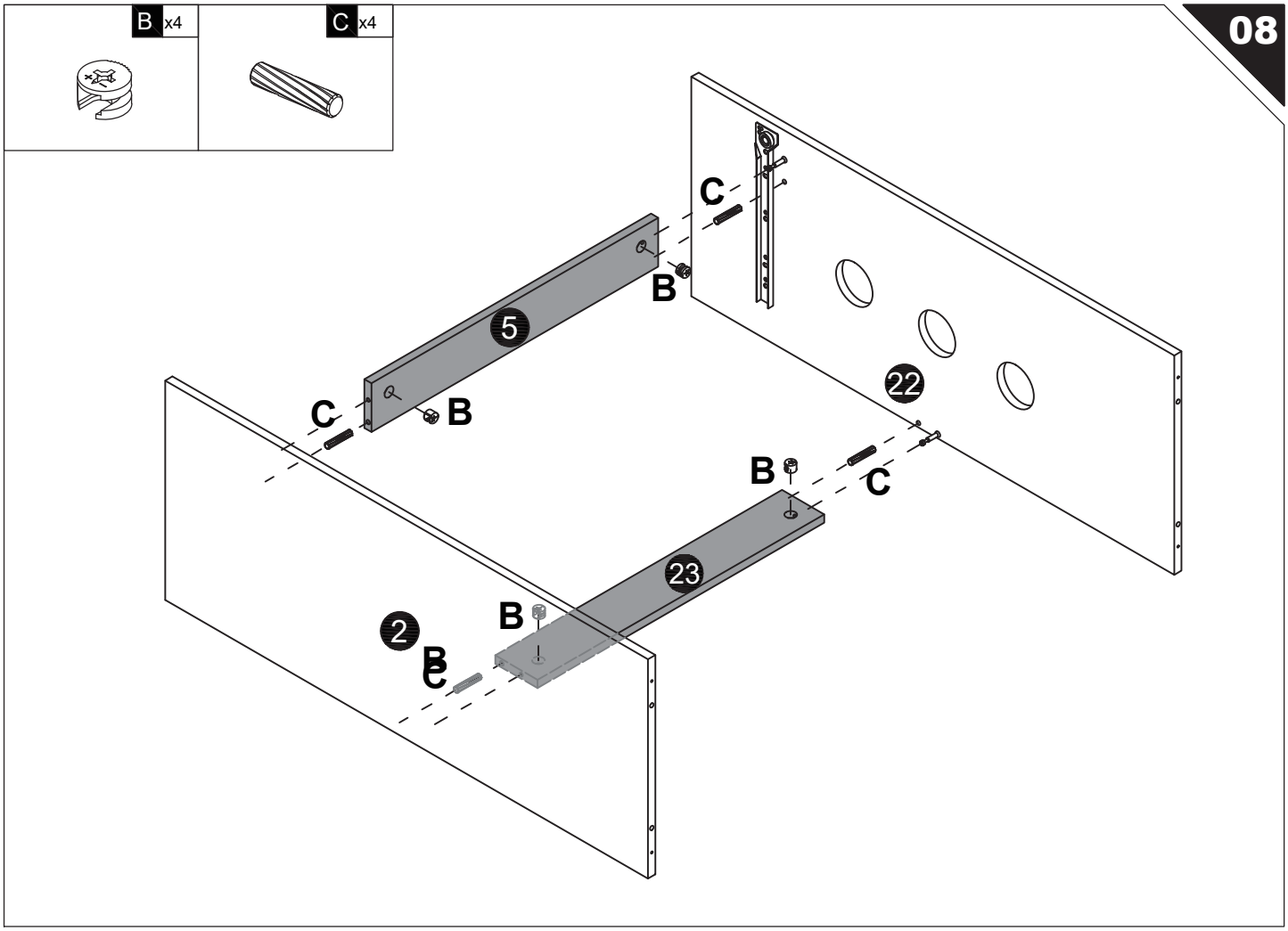

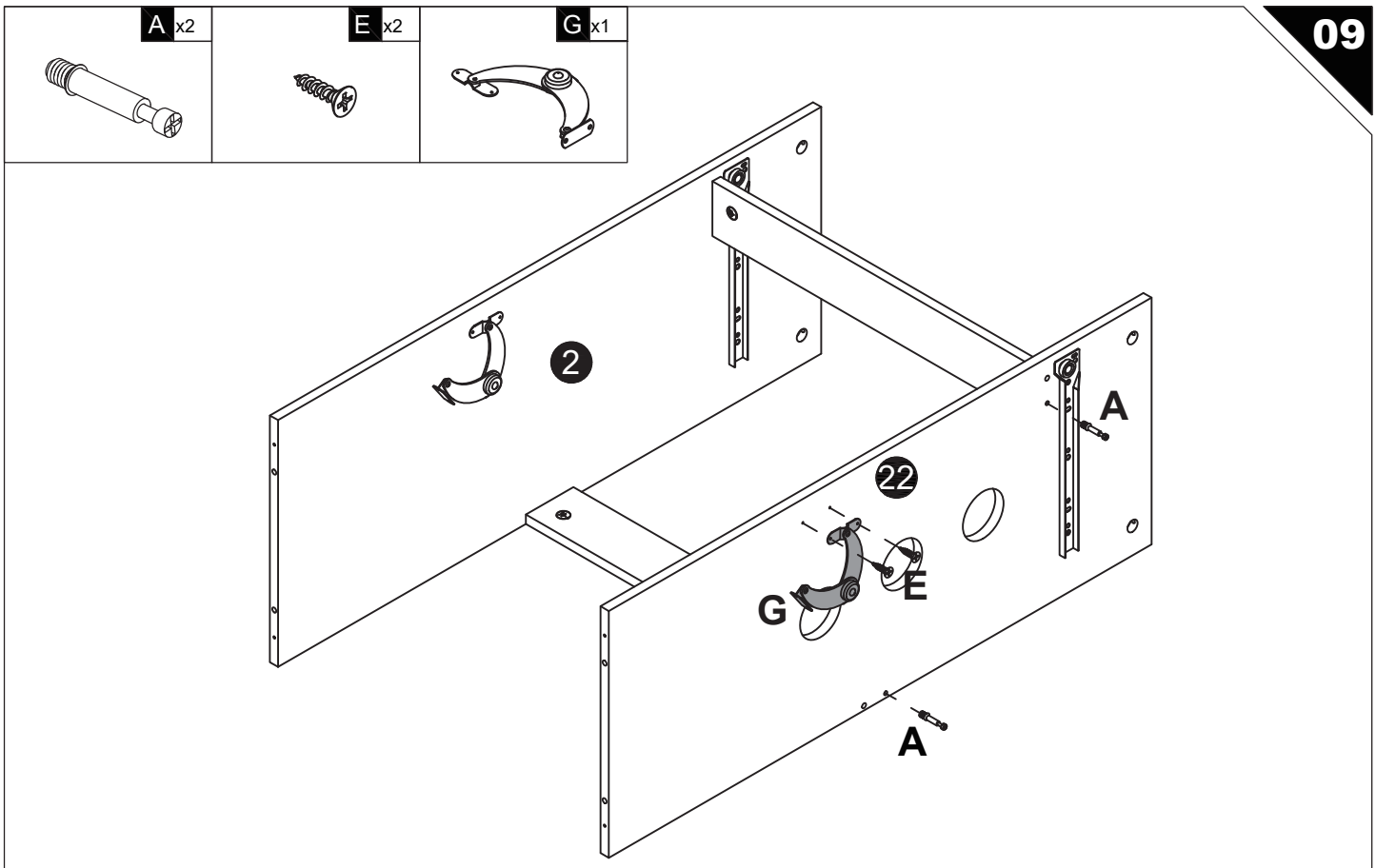

This hinge is adjustable, adjust it to
the appropriate angle before installationand,
it will make a clicking sound when adiusting the angle.

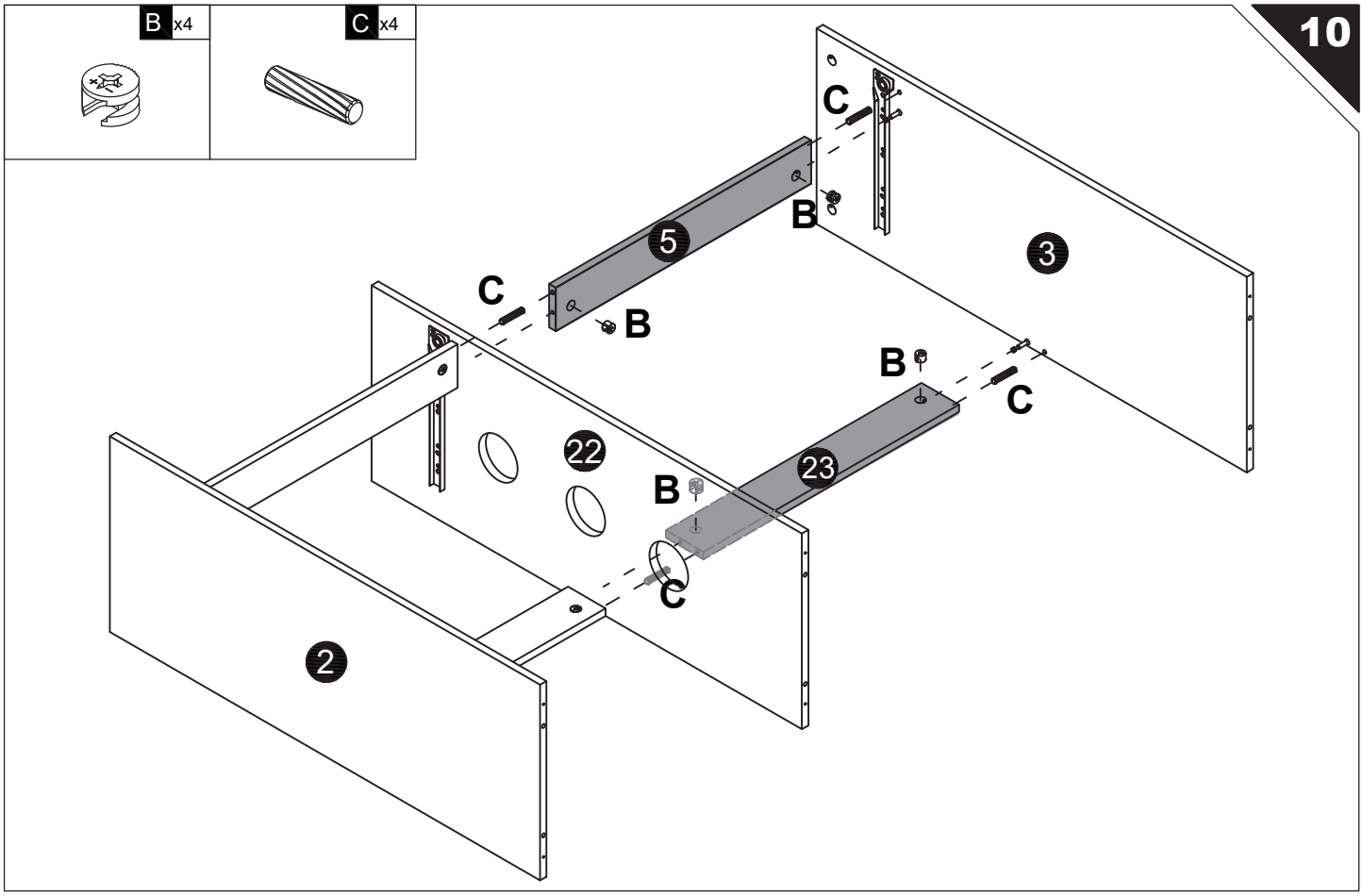
10
B x4
C x4
C
B
5
3
C
B
B
C
22
23
B
C
2

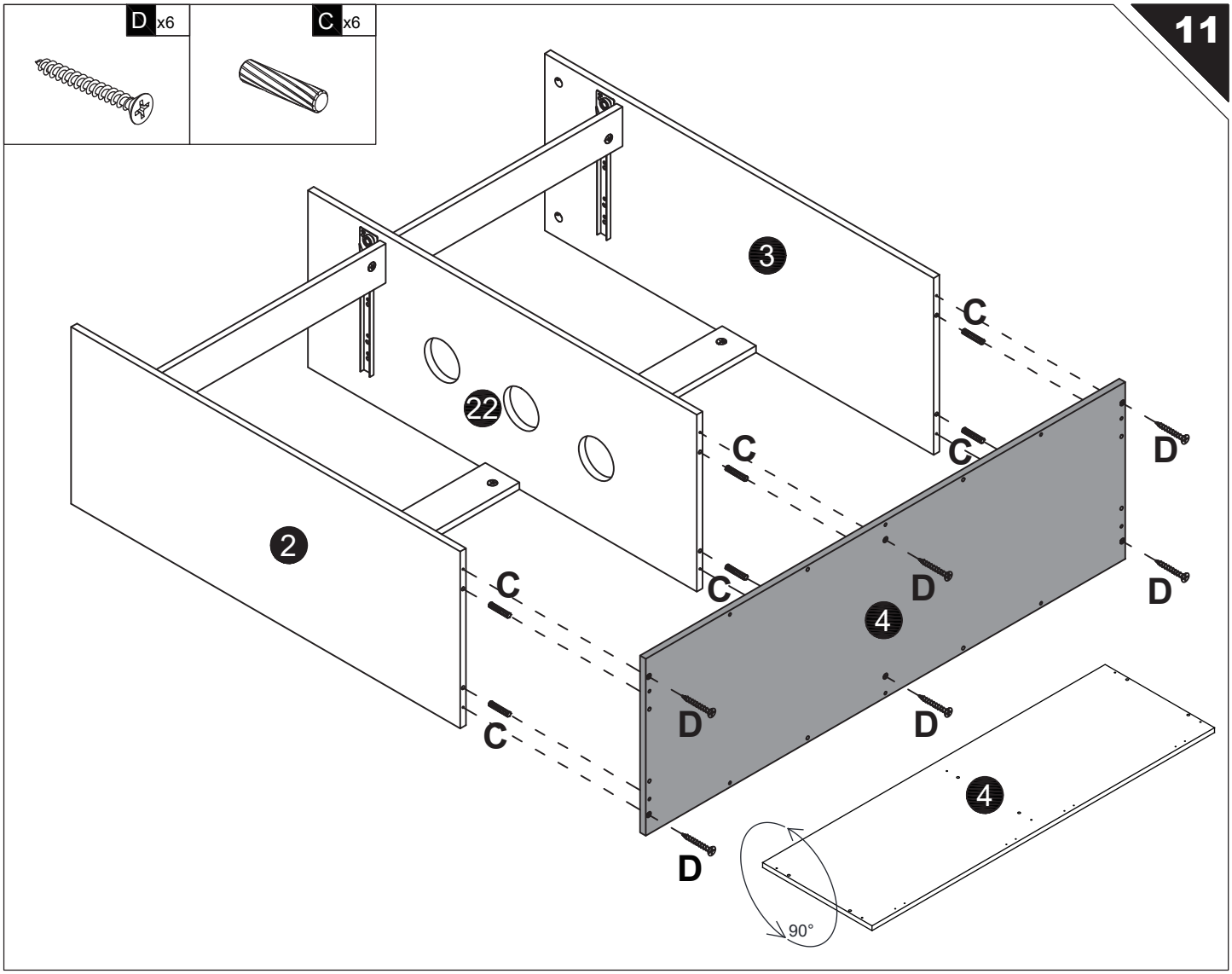
11
D x6
C x6
3
22
C
C
D
2
C
C
D
D
4
C
D
D
D
4
90°

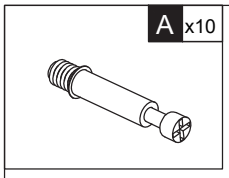
A x10

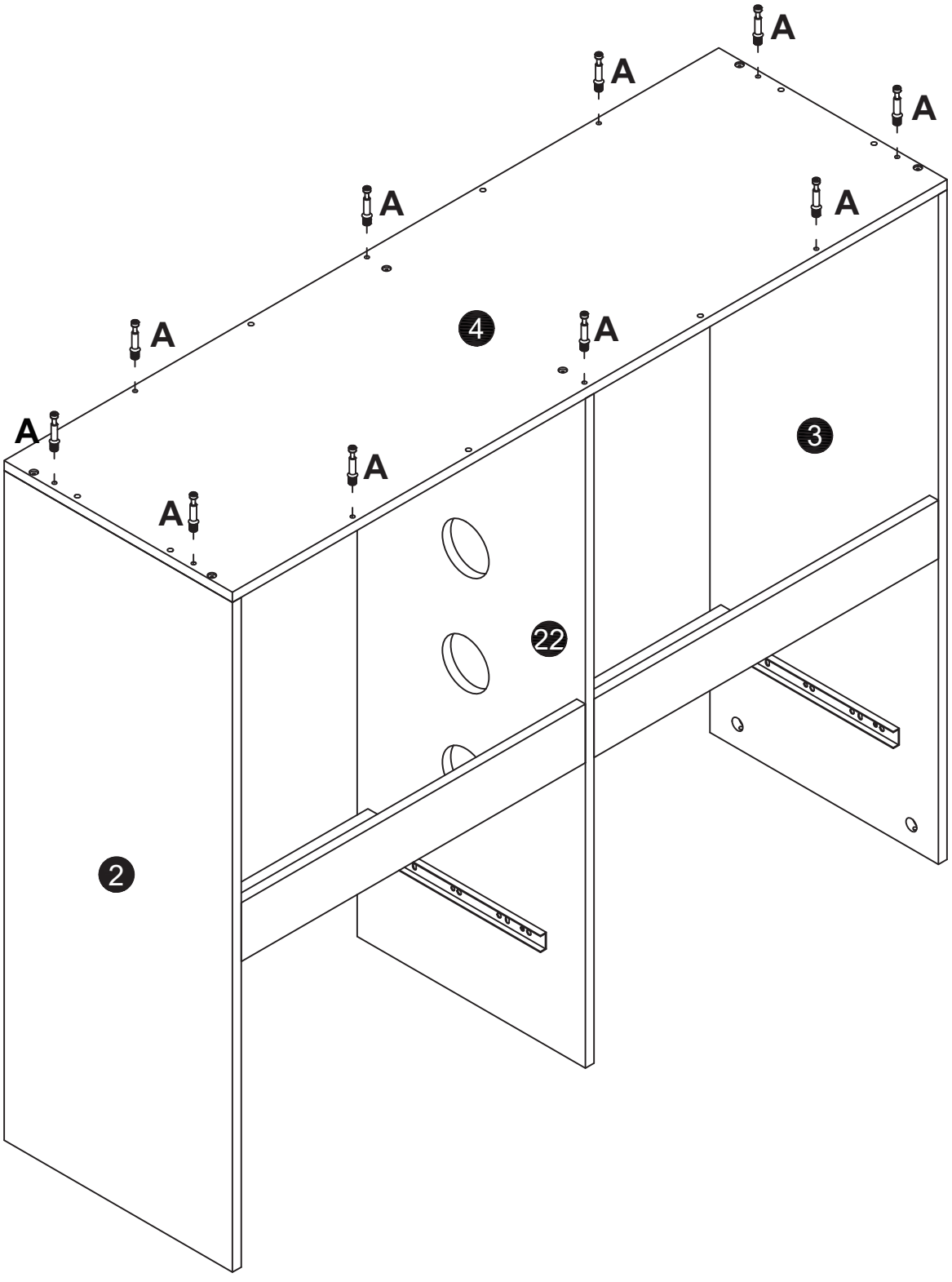
A
A
A
A
A
A
A
A
A
4
3
22
2

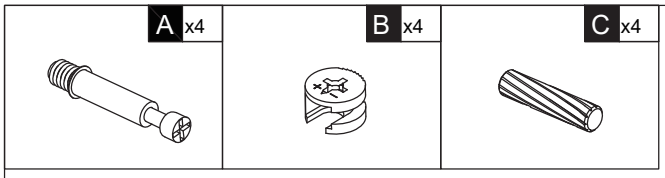
A x4
B x4
C x4

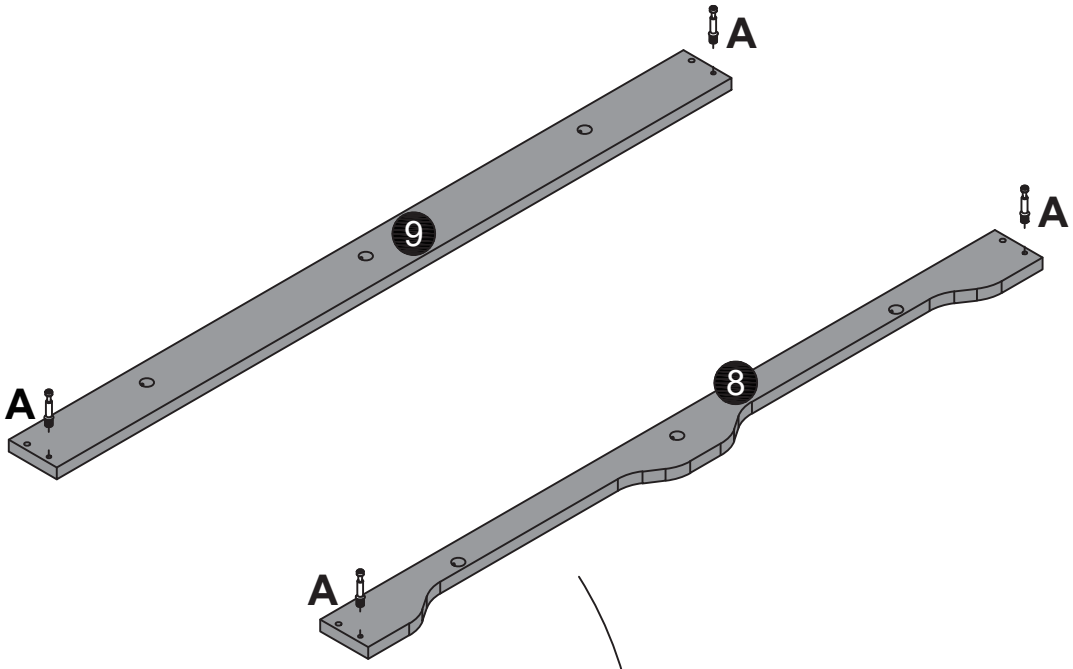
A
9
A
8
A

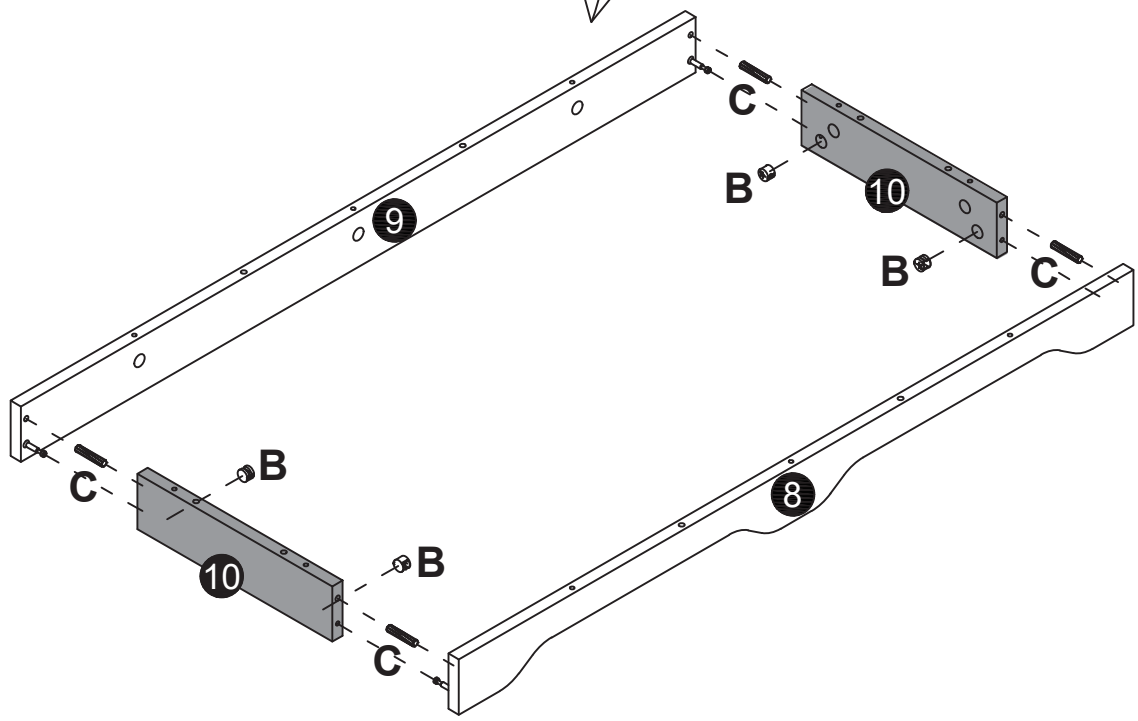
C
B
10
B
C
9
C
B
8
10
B
C

B x10



C x8

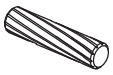

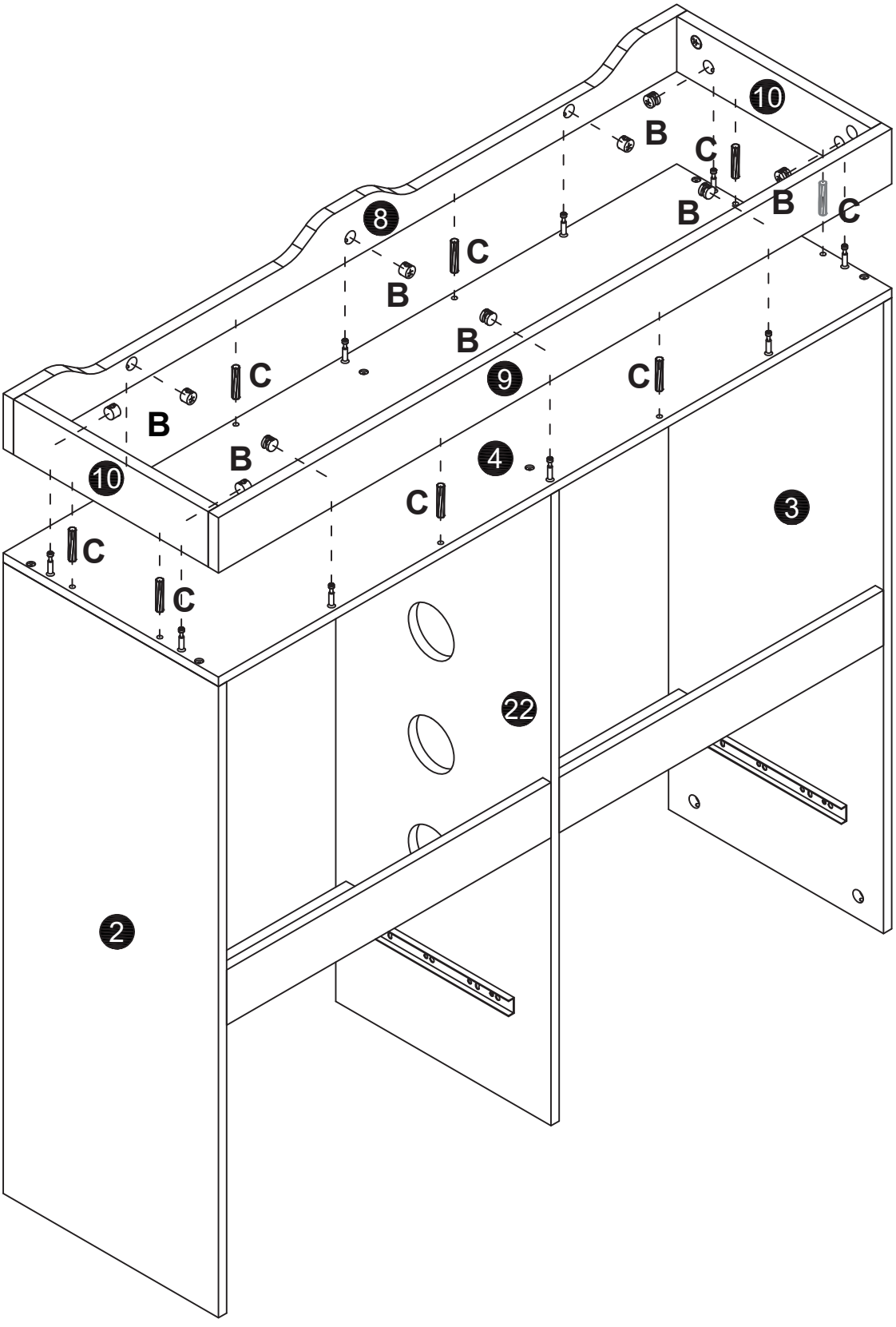

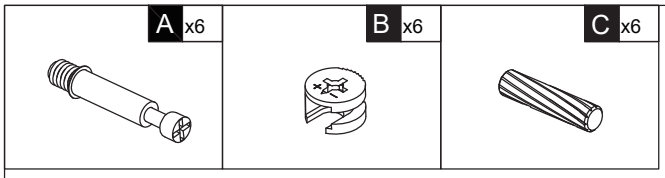
A x6
B x6
C x6

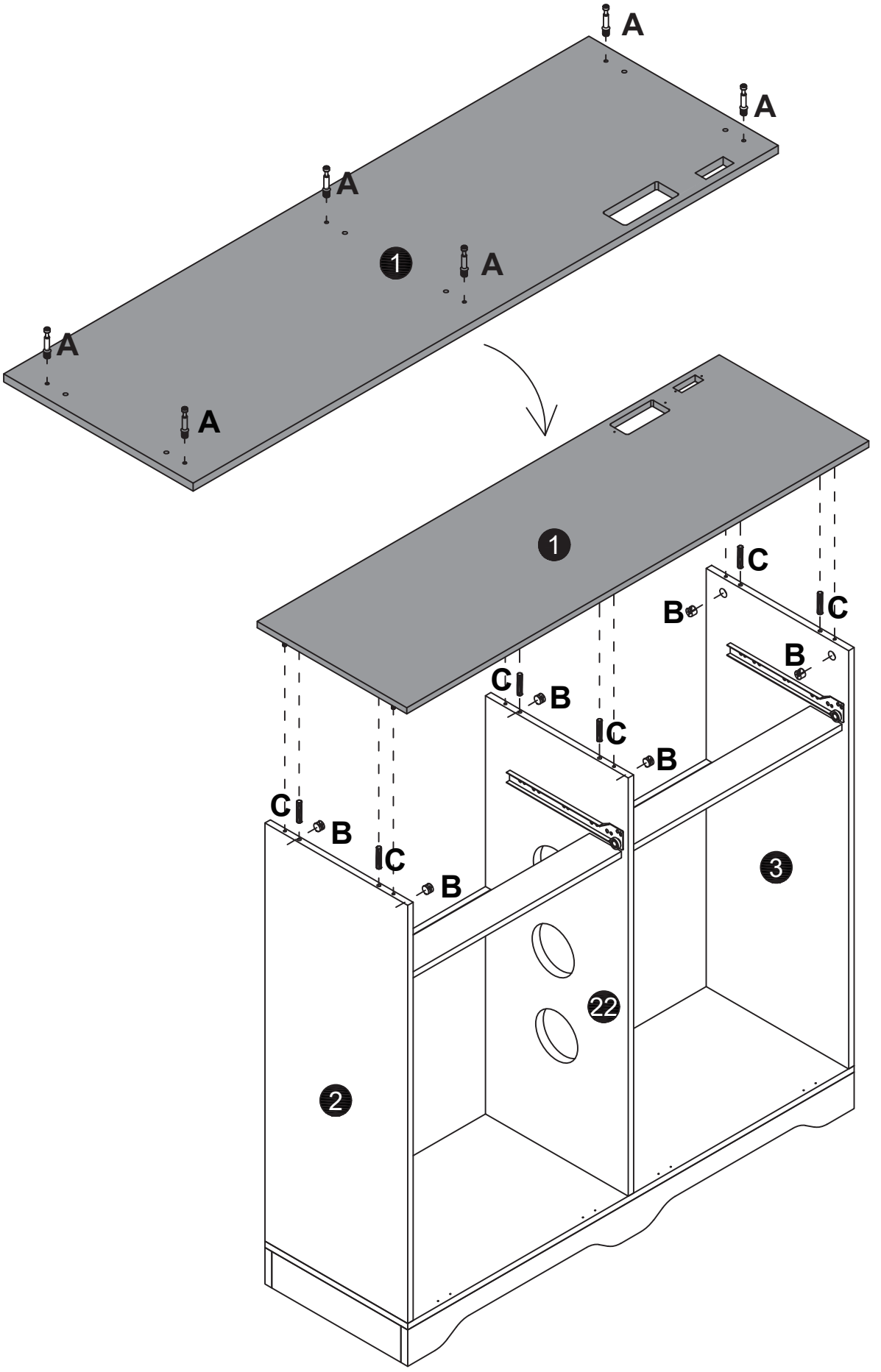
A
A
A
1
A
A
A
1
C
B
C
B
C
B
C
B
C
B
3
22
2

J x28	K x6
	

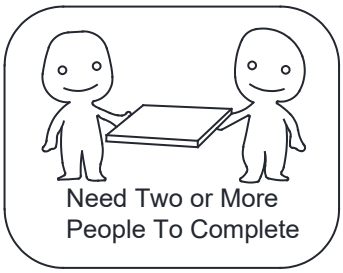

When the diagonals are equal, please first install the screws at the marked positions to fix the backboard, and then proceed to install the remaining screws. Otherwise, installation may cause the backboard to tilt.

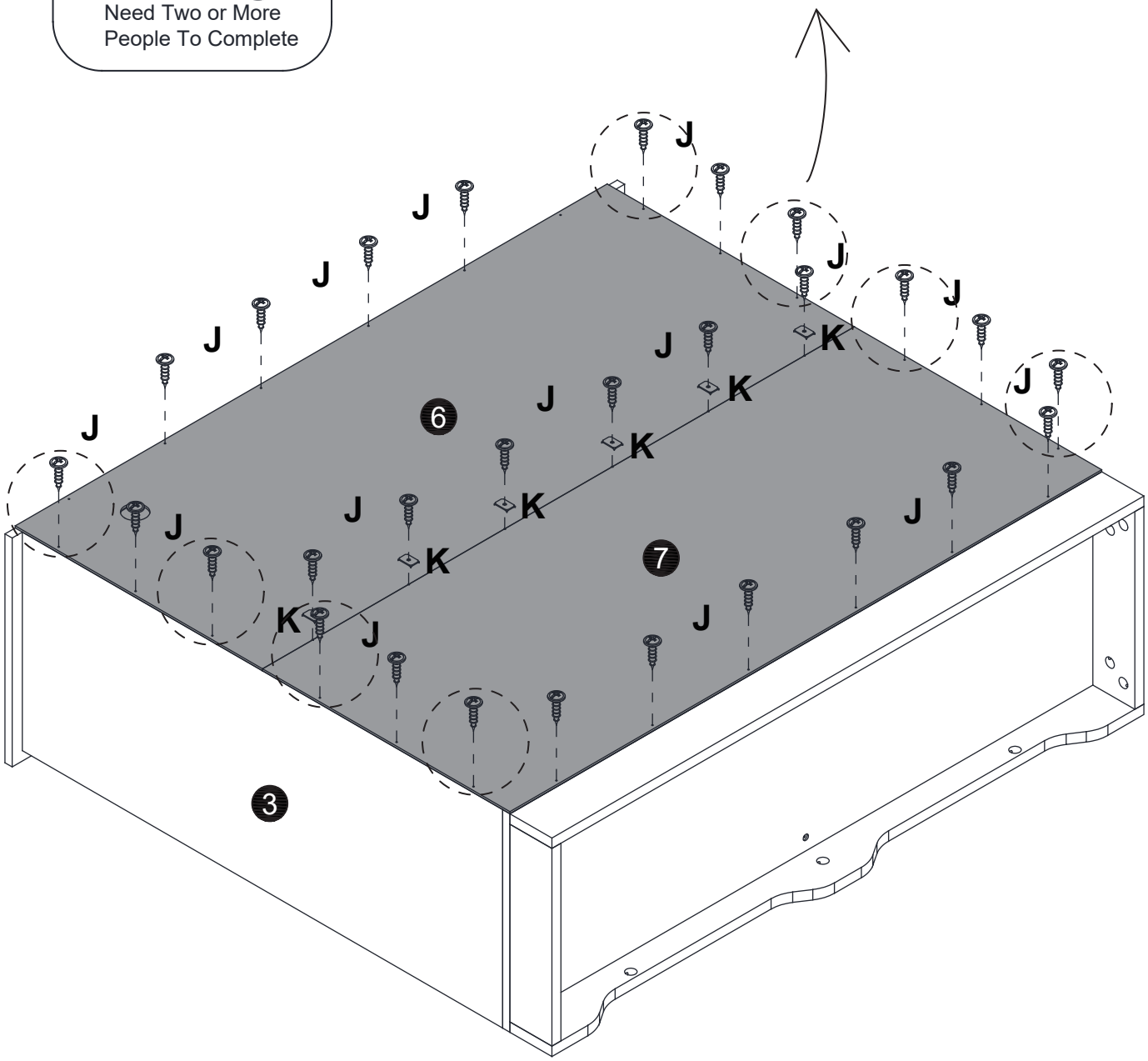

C x16

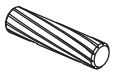

D x20

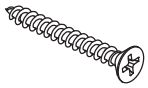

x2

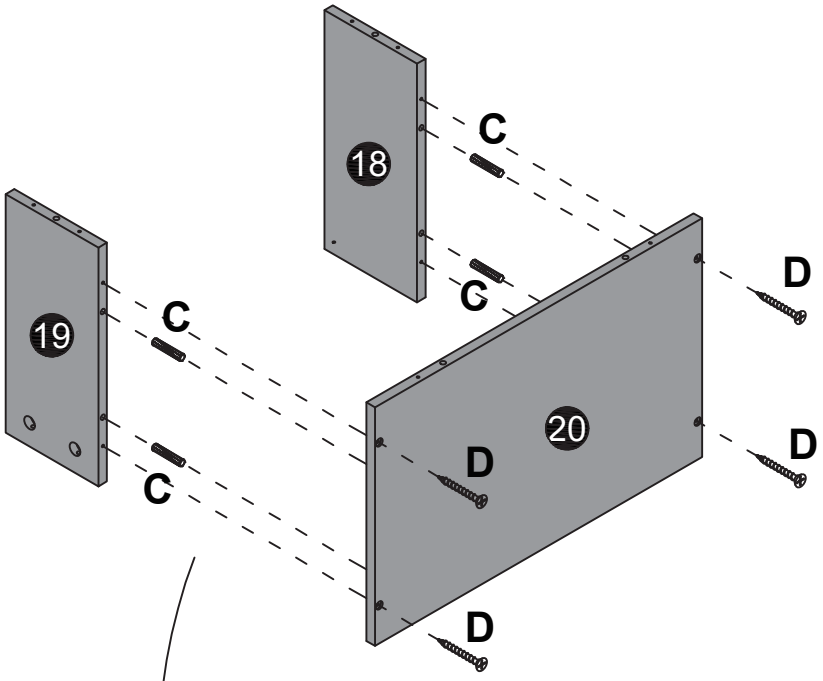

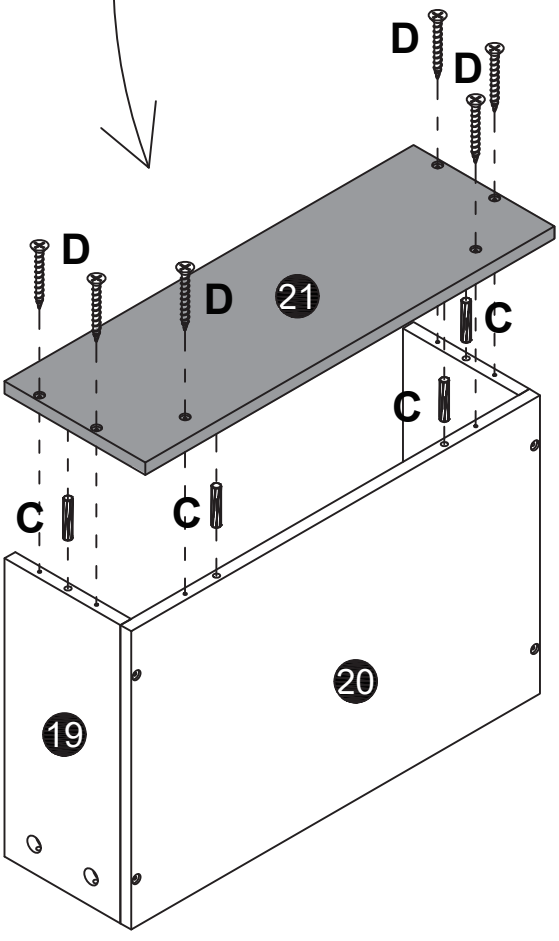

A x8	E x12	F x2	H x4
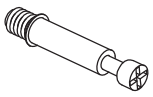		F-1 F-2 	

x2

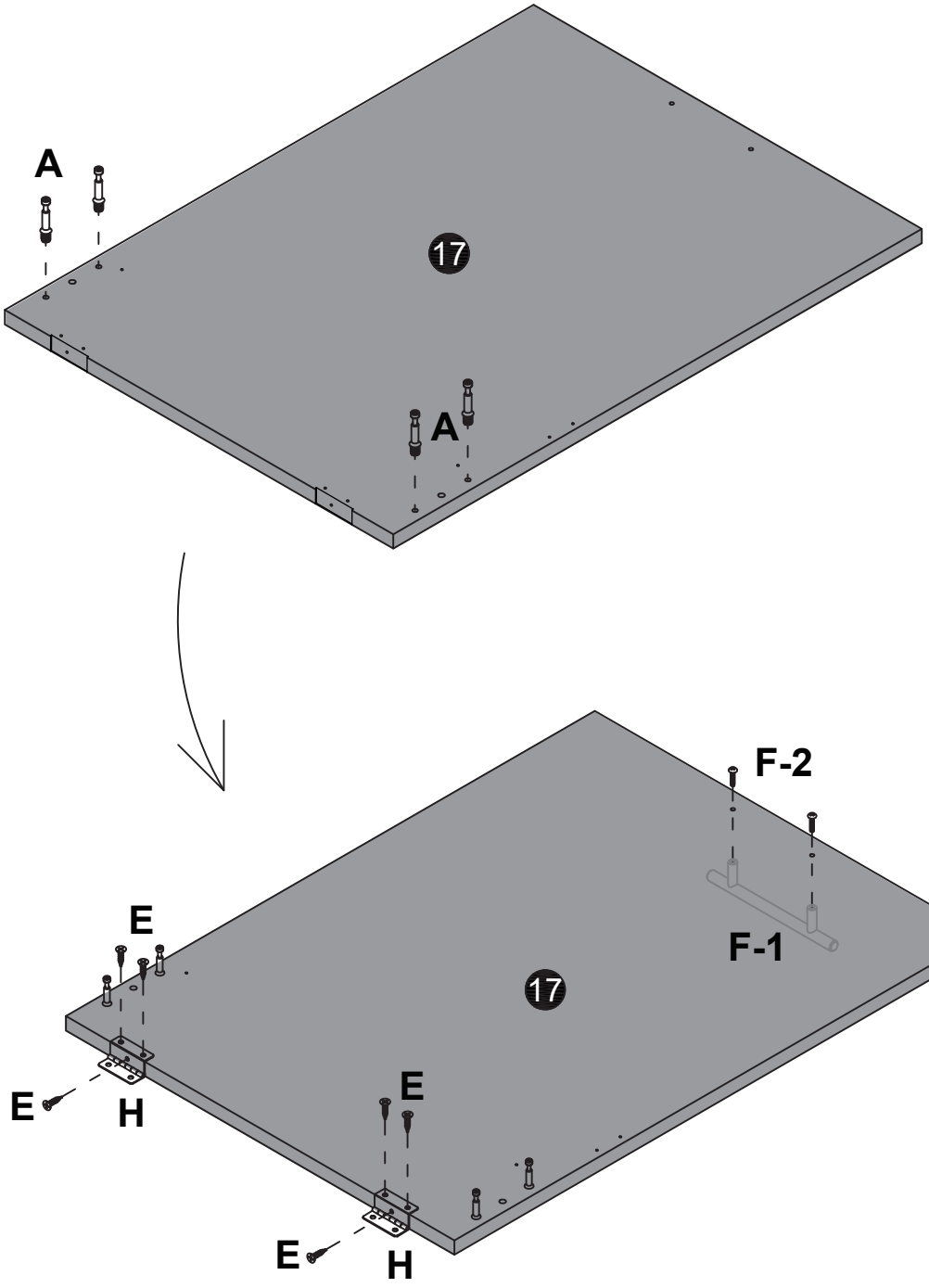

E x4

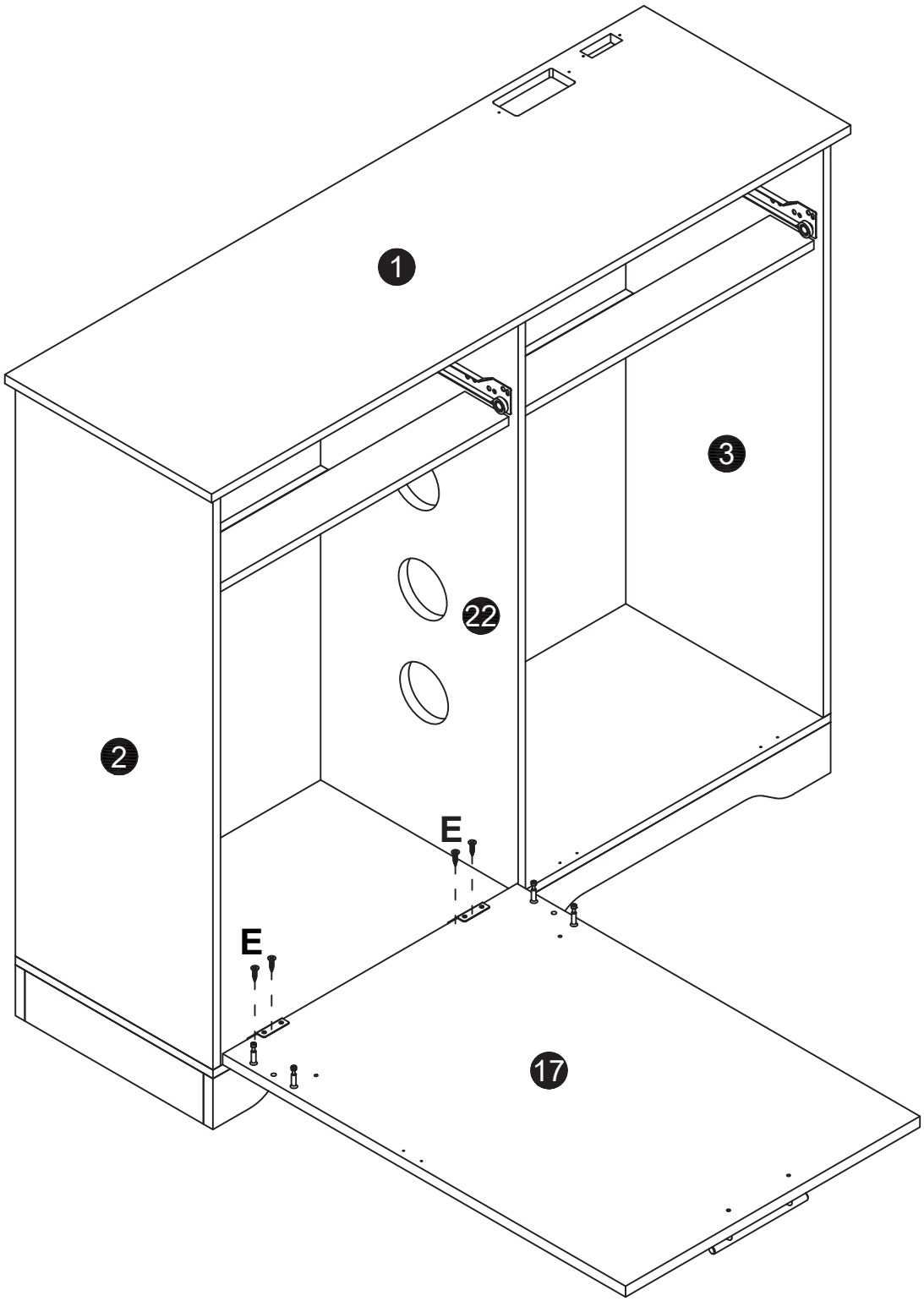

B x4	C x2	E x4	P x2
	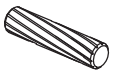		

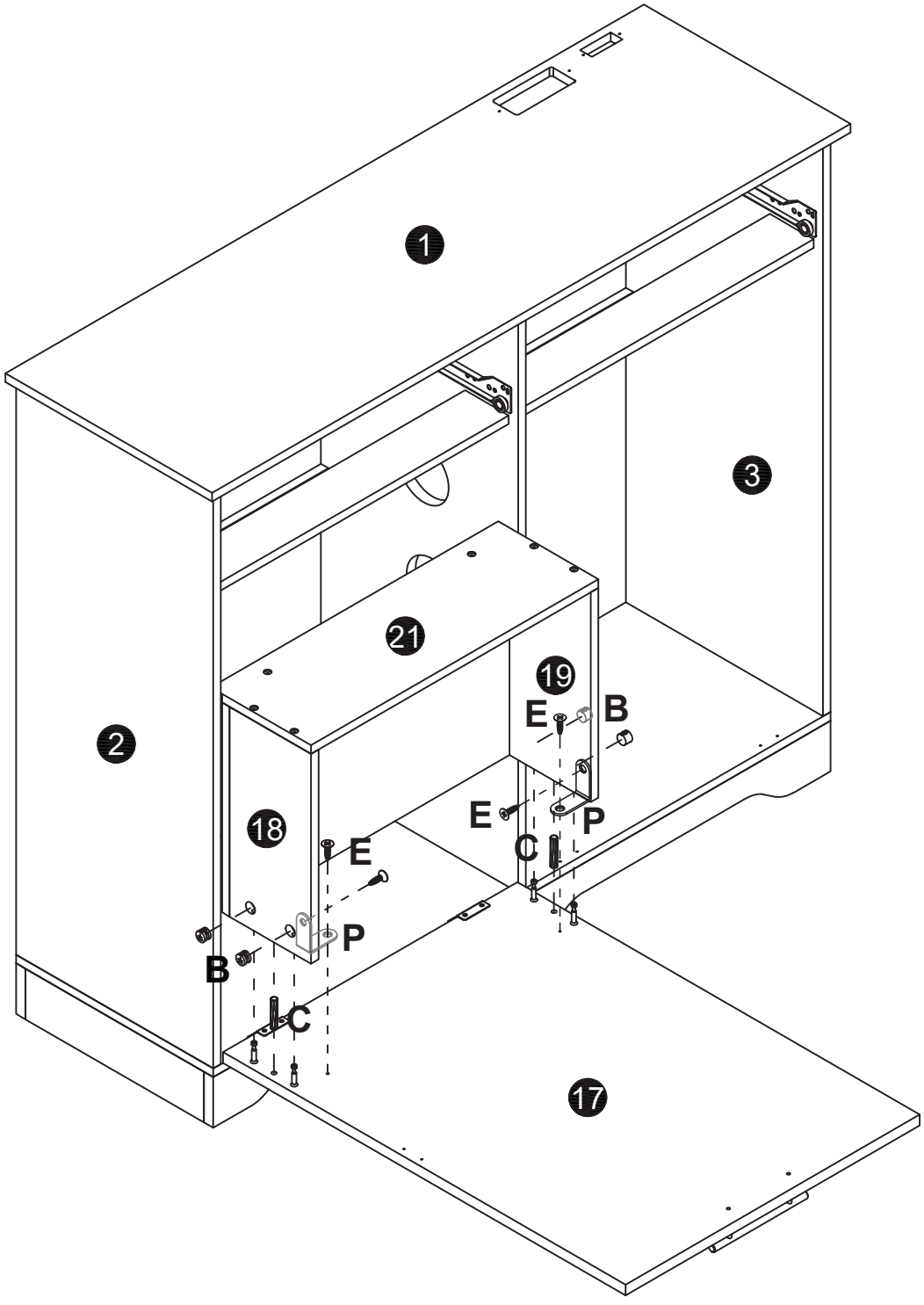

E x2



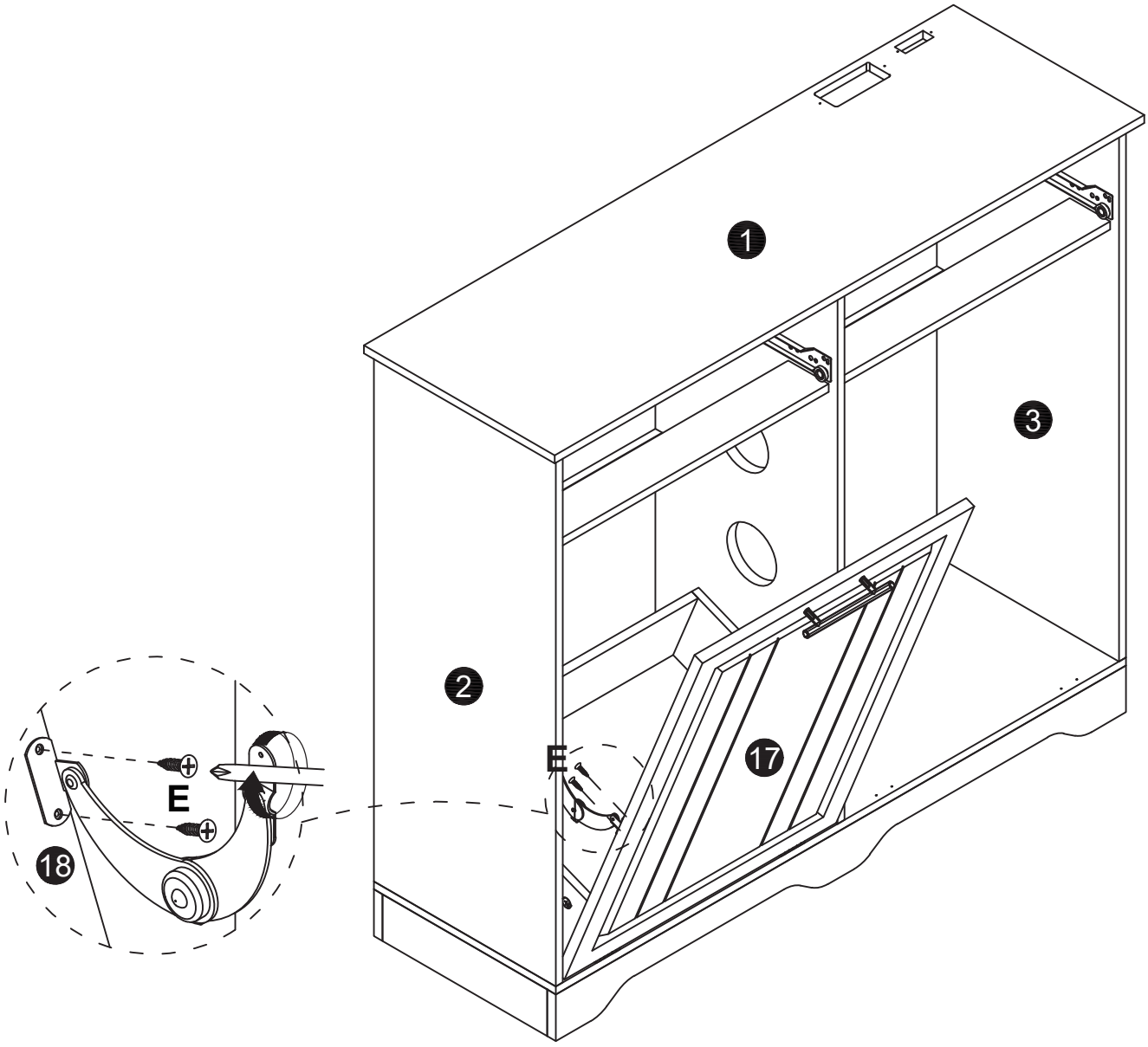

E x4

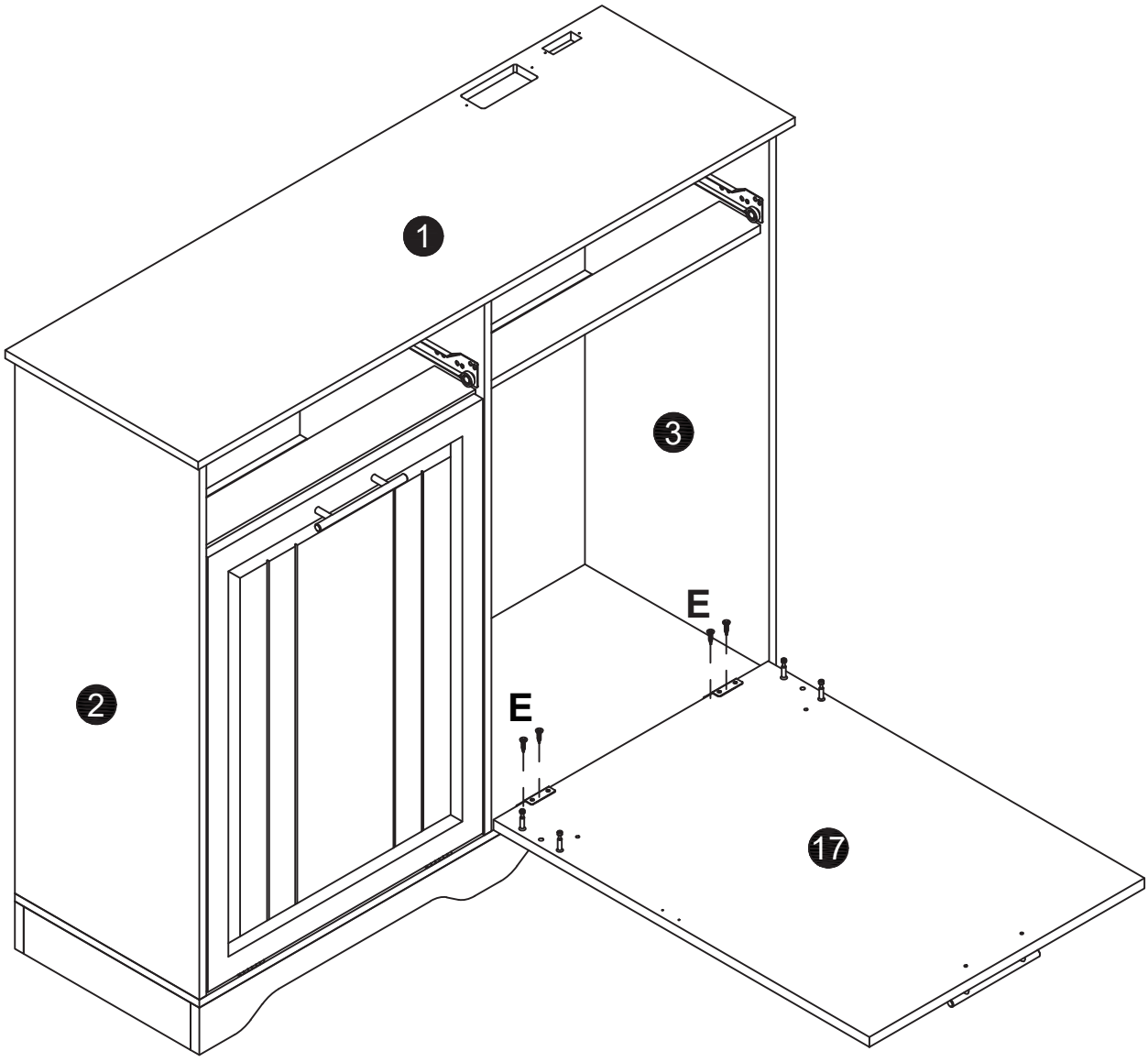

B x4	C x2	E x4	P x2
	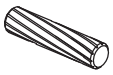		

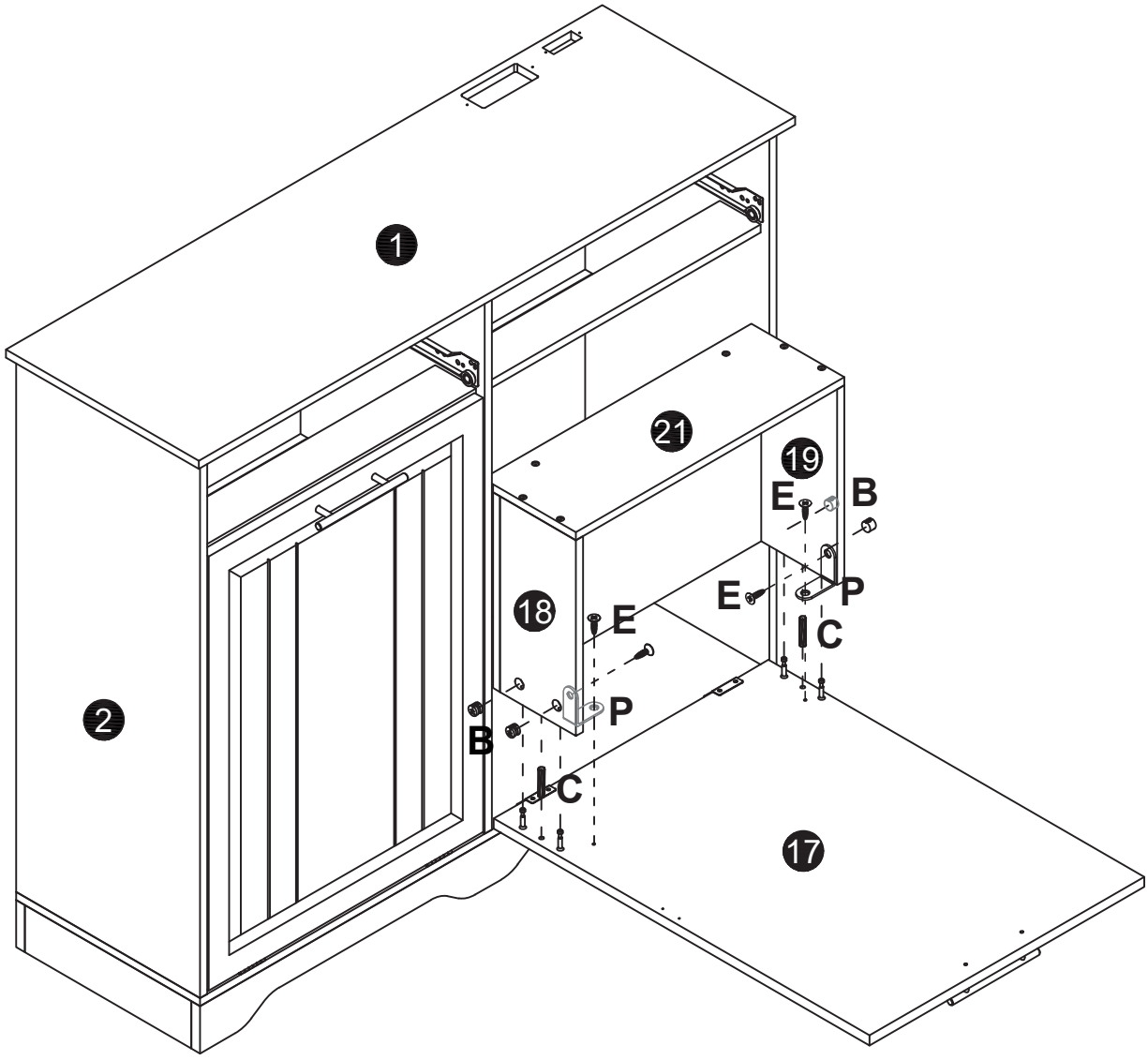

E x2

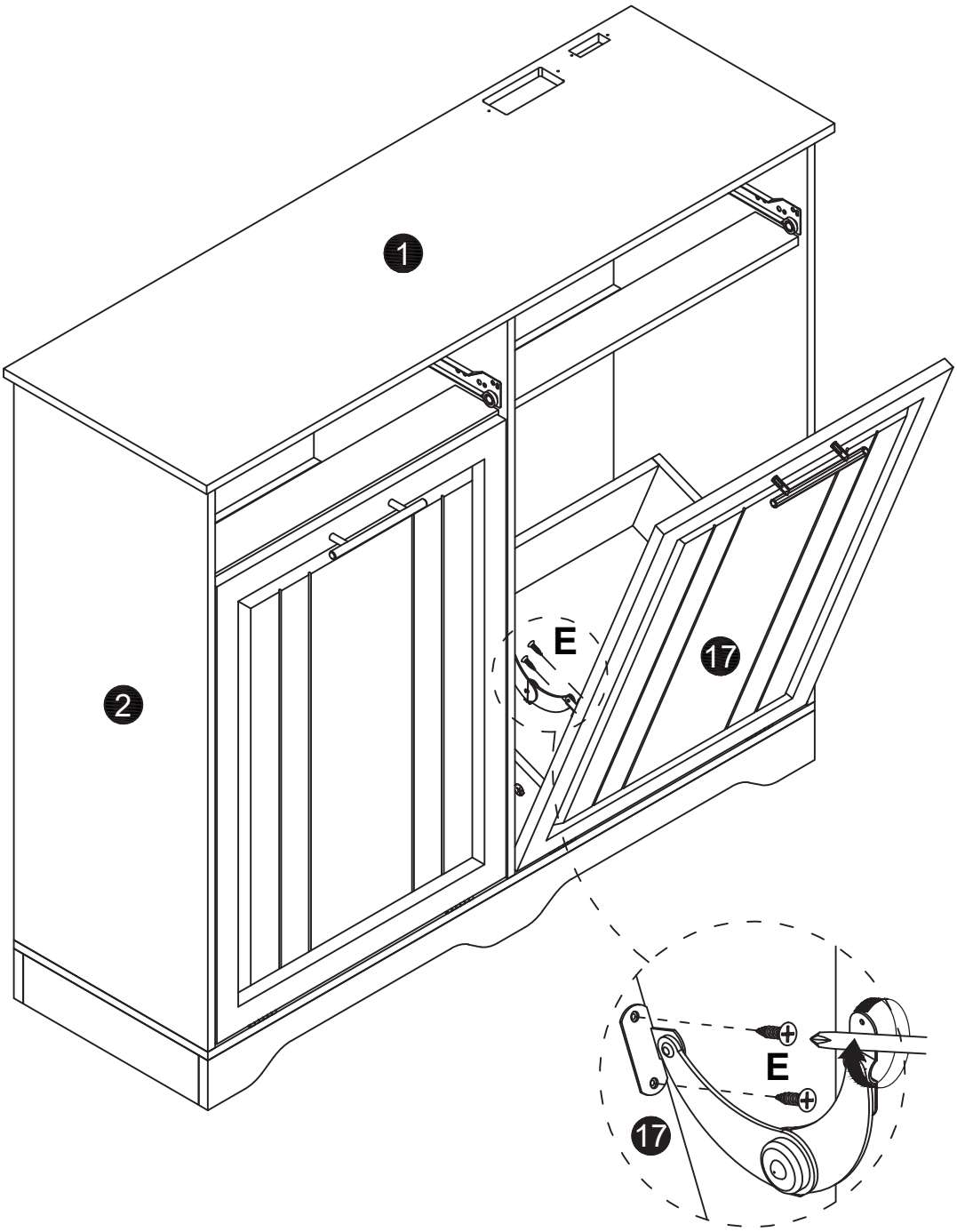

E x2	M x1	N x1	O x2
	M-1 M-2 	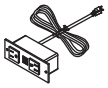	

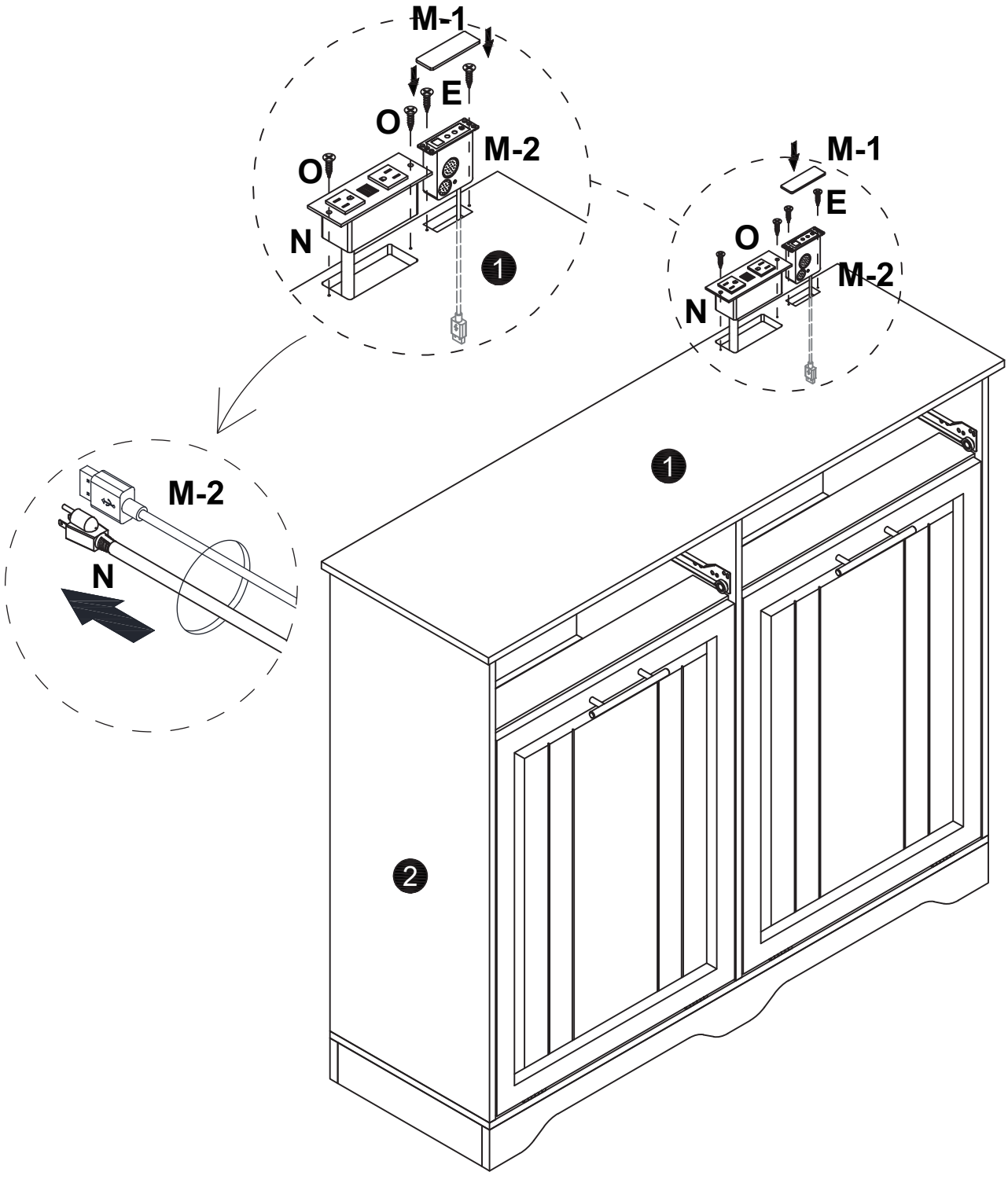

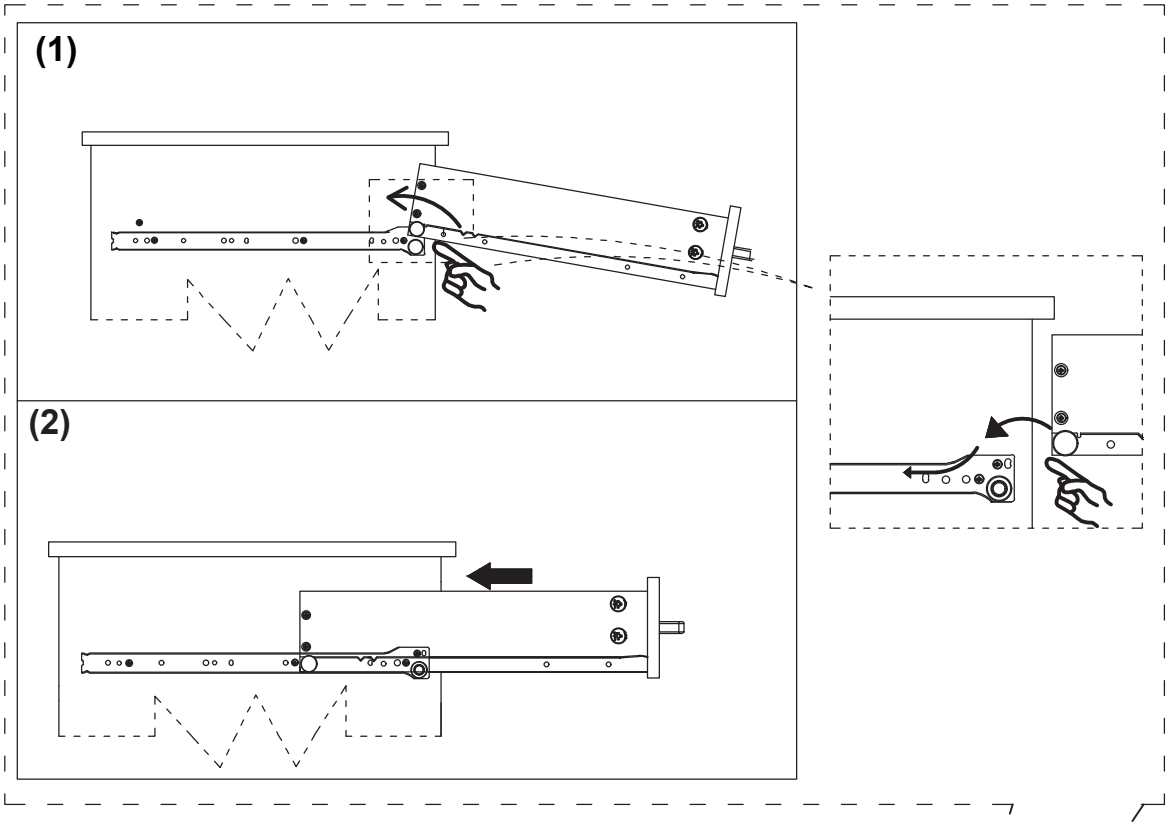
(1)
(2)

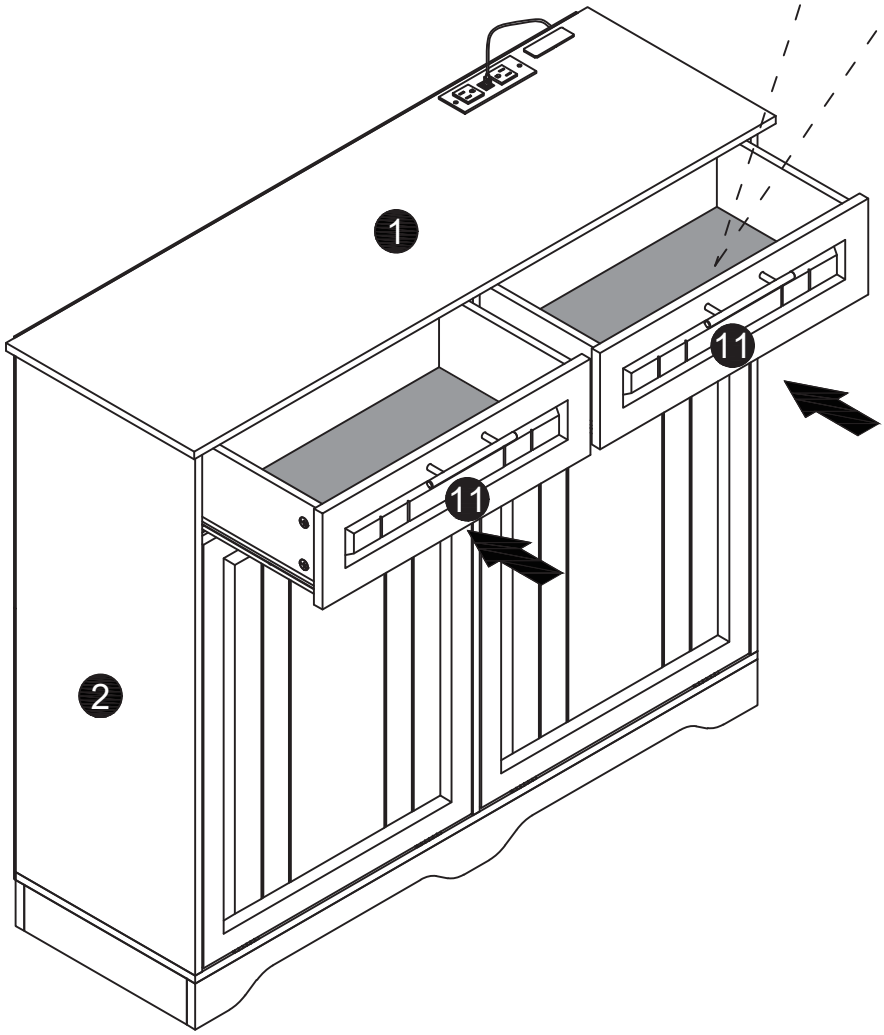
1
11
11
2

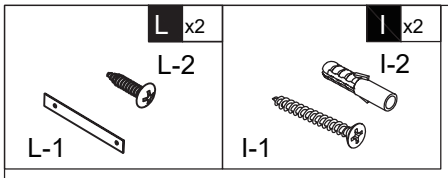

Done

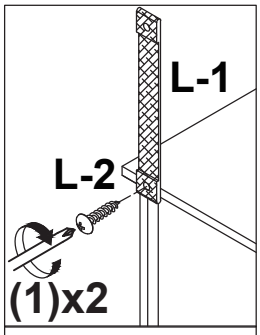

First fix the anti-rewind screw in the reserved hole of the product.

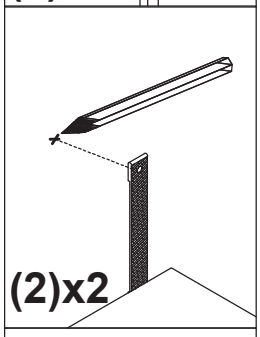

then, use a ruler to measure the approximate height of the product on the wall, and then mark it witha pen.

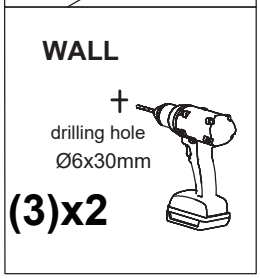

Then use a tape drill to make holes in the wall that are suitable for the product screws.

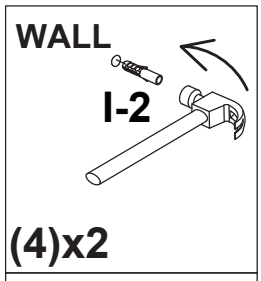

Then,put the expansion bolt into the hole

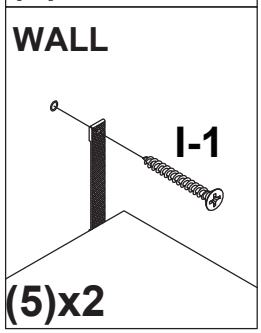

Finally,pass the matching screws throughthe "anti-rewind" and tighten themto fix them on the wall.

