FORIOUS

Specifications

Faucet Dimensions

Overall Height: 16.54"
Spout Height:8.58"
Spout Reach:8.35"

Feature

- Pull Down Faucet
- Brass Body
- ABS Sprayer
- 360° Swivel Spout
- Flow Rate: 1.8GPM at 60 psi
- Spray Type:Spray/Stream
- Quick Connect Sprayer Hose
- 35mm Ceramic Cartridge
- Swivel Sprayer Connector
- Environmental PEX material
- Connections 3/8" Compression
- Easy 1-Hole Or 3-Hole Installation
- Single lever handle
- 27.5" Stainless Steel Braided Waterlines
- Max Deck Thickness: 2.03"

Pull Down Single Handle
Kitchen Faucet with Deck Plate

Models: WW0200

Accessories Included

- Weight
- Deck Plate

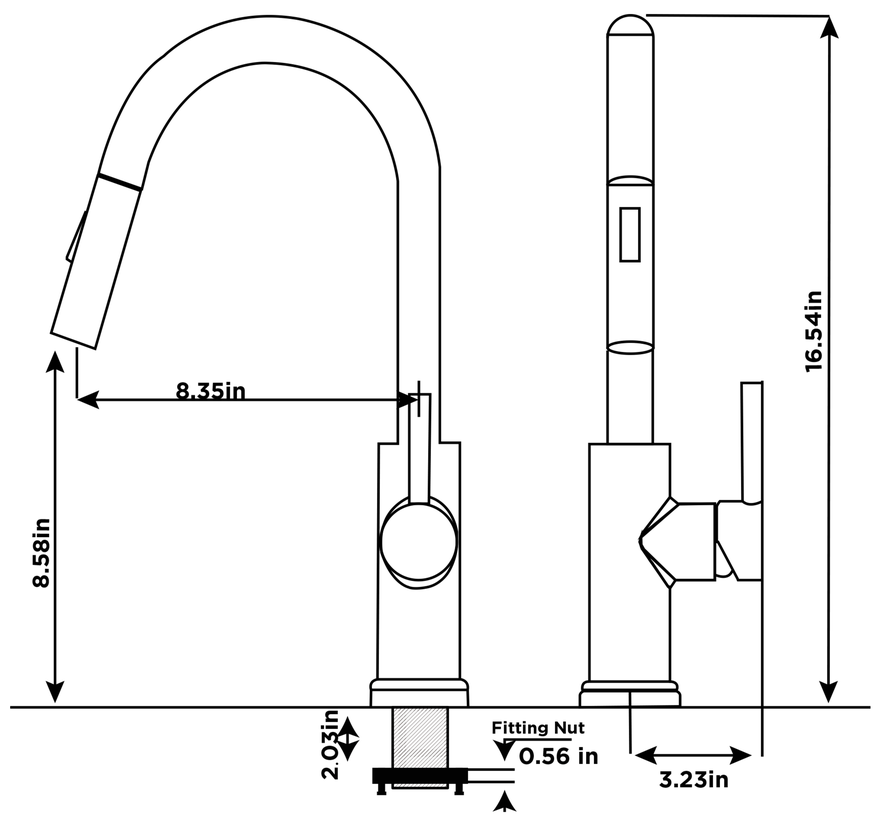

Available Finishes

- Brushed Nickel
- Black
- Gold
- Gray

Warranty

FORIOUS Full Lifetime Warranty
Warranty against leaks,drips and finish defects
to the orginal consumer purchaser

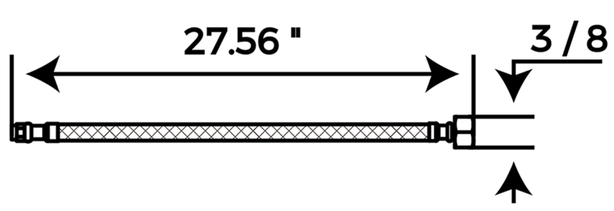

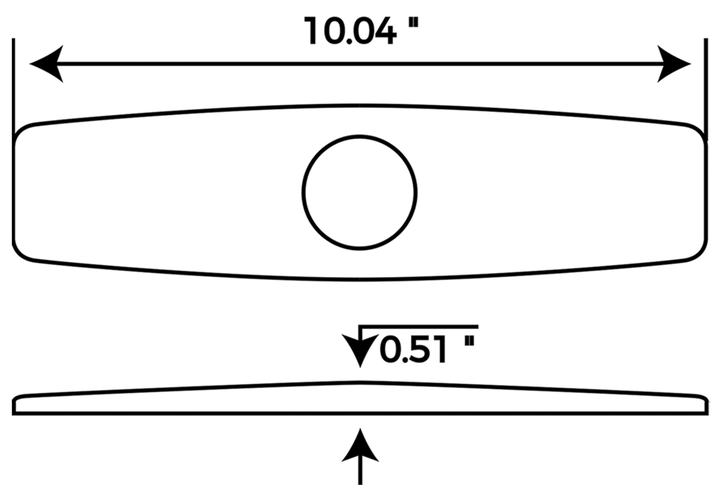

FORIOUS Customer Service
service@forious.com