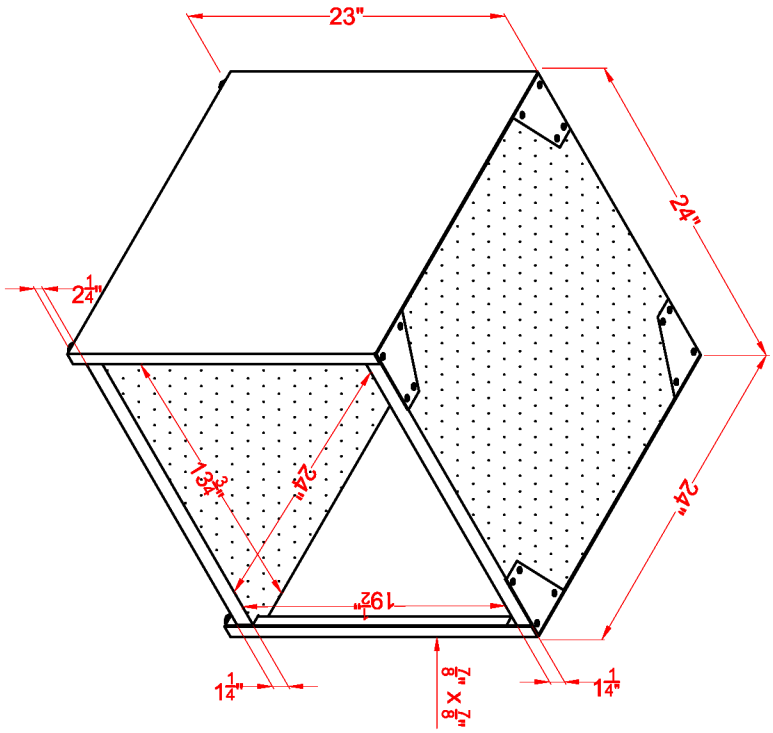
23"
24"
24"
$2\frac{1}{4}$"
$13\frac{3}{4}$"
24"
$19\frac{1}{2}$"
$1\frac{1}{4}$"
$1\frac{1}{4}$"
$\frac{7}{8}$" x $\frac{7}{8}$"