ASSEMBLY INSTRUCTIONS

FULL SIZE

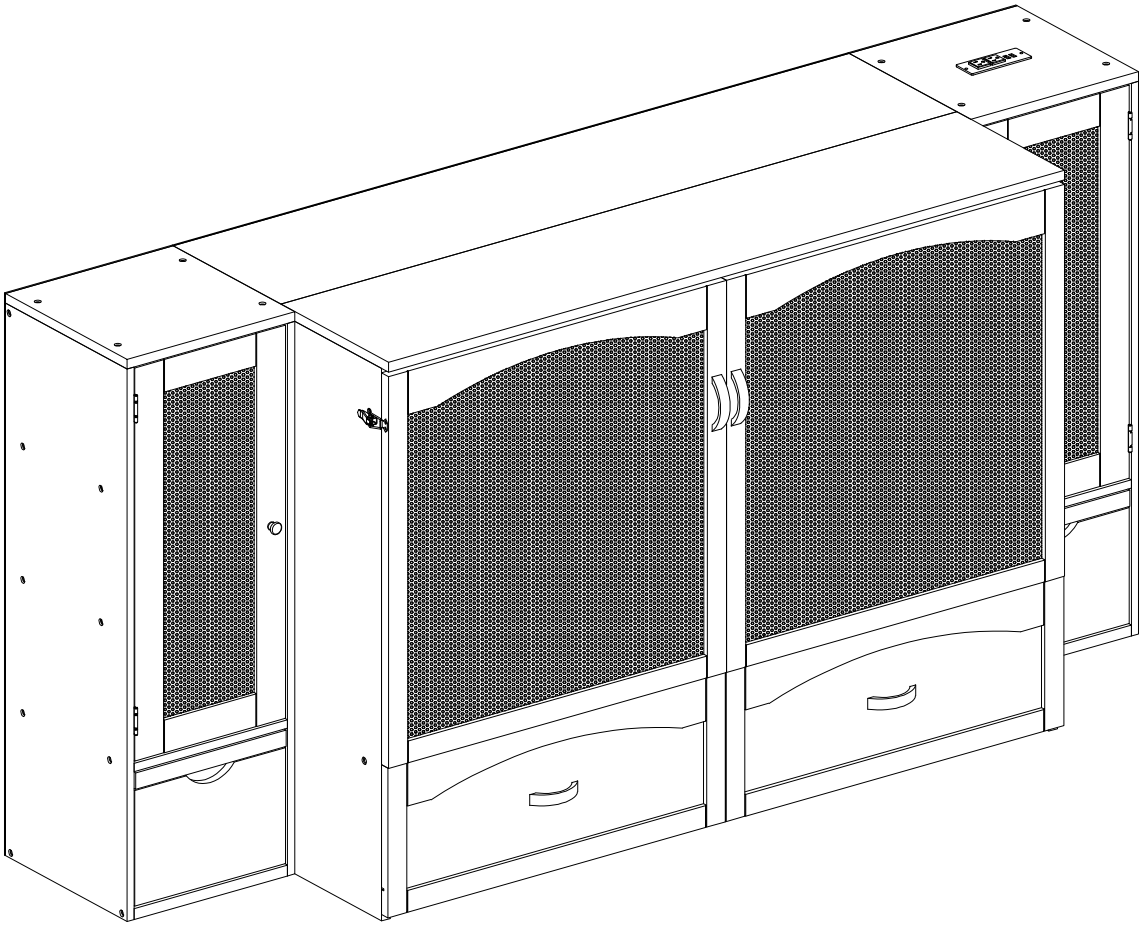

This set is included 3 boxes if don't receive full 3 boxes please contact our customer service team.

Detail View

WARNING:
Keep small components out of the reach of children

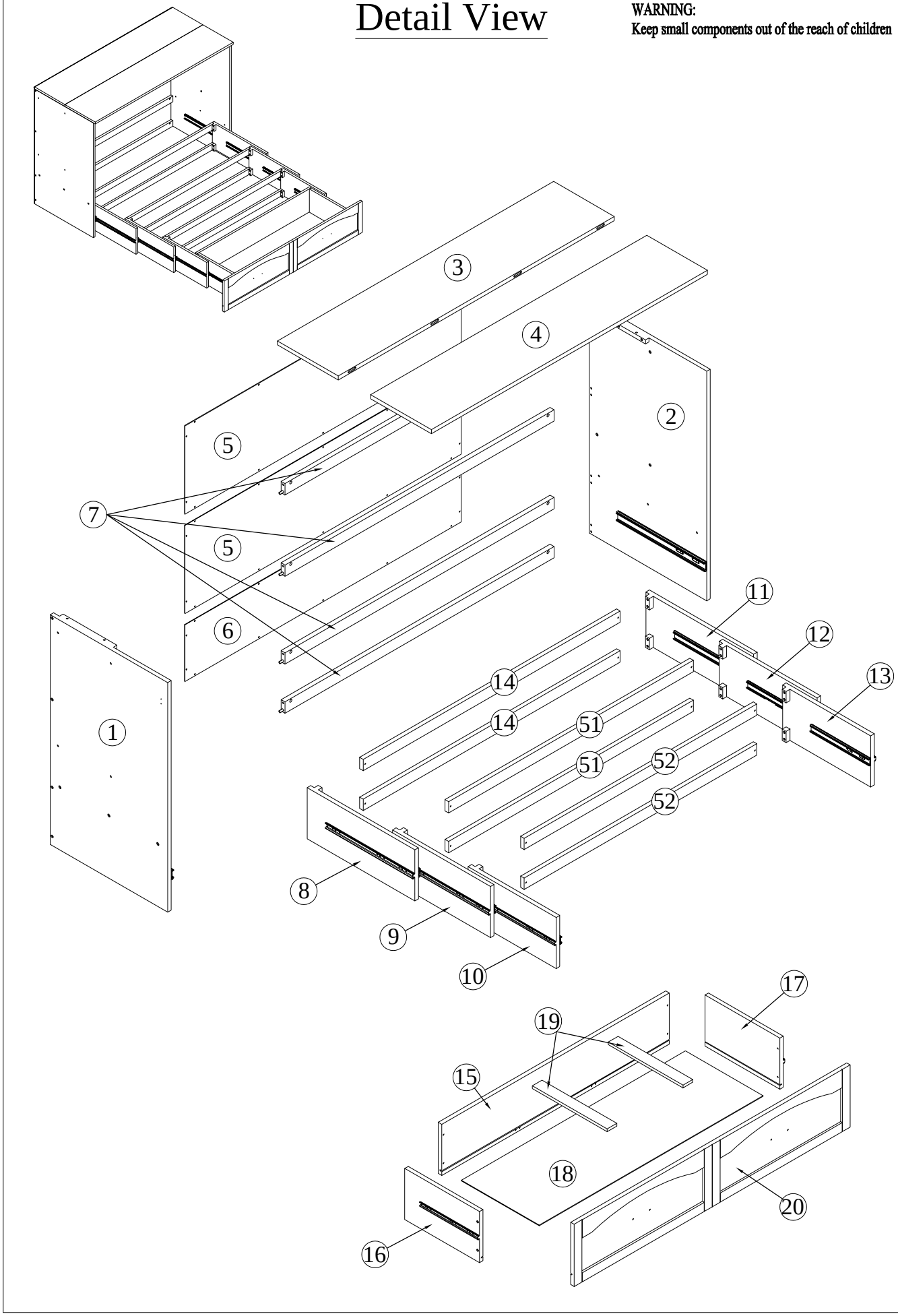

Detail View

WARNING:
Keep small components out of the reach of children

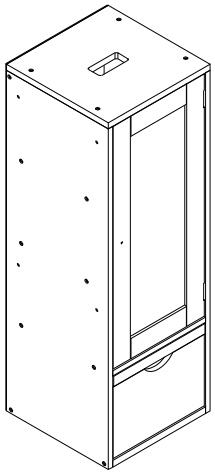

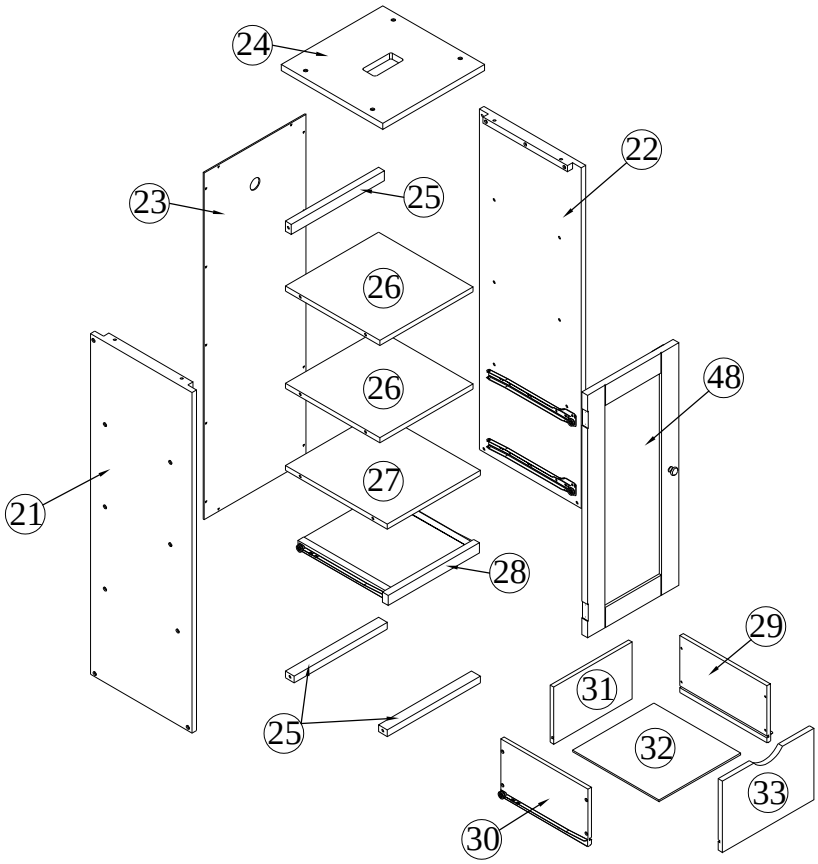

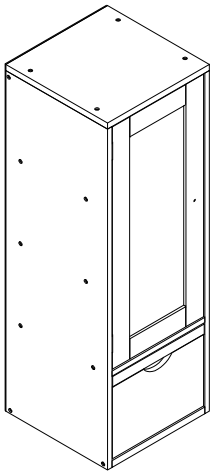

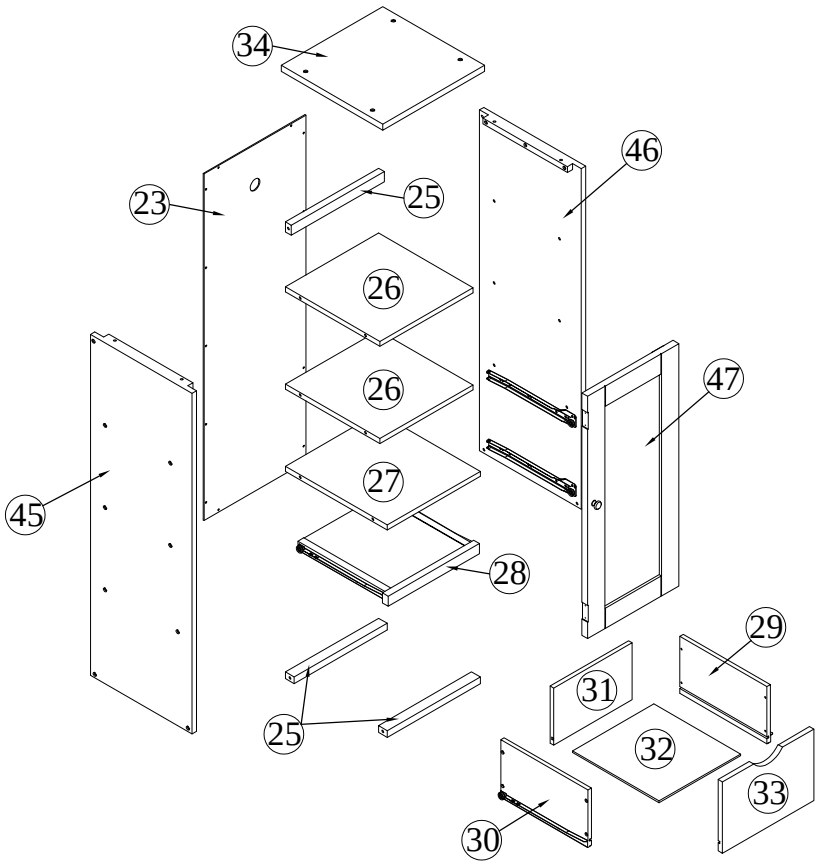

Detail View

WARNING:
Keep small components out of the reach of children

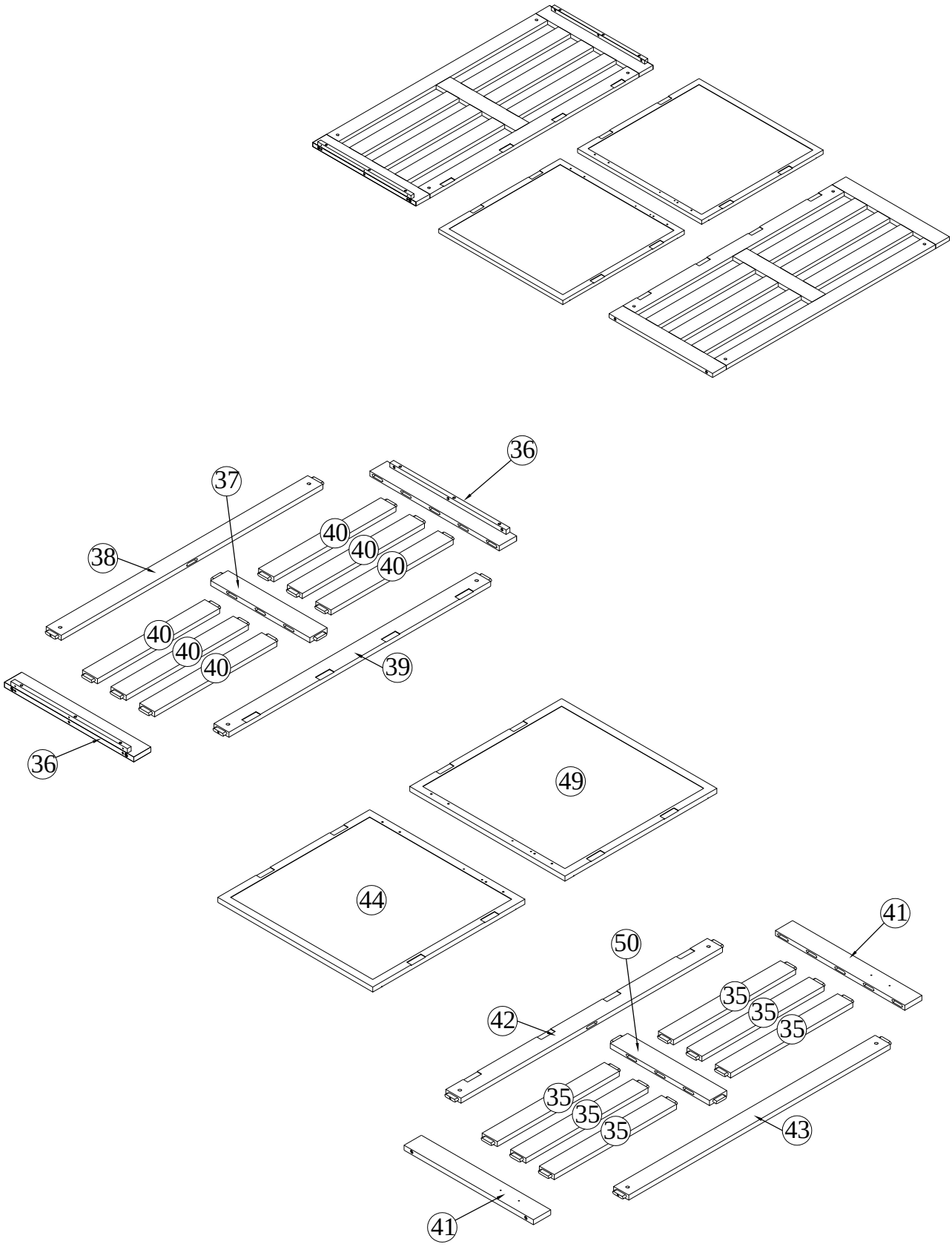

Part List

1 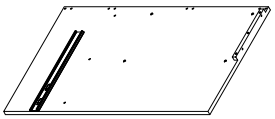	2 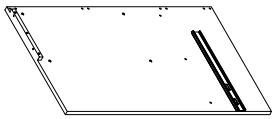	19 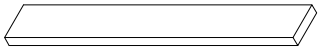
Right Hip Plank - 1pc	Left Hip Plank - 1pc	Fix the bottom of the drawer - 2pcs
21 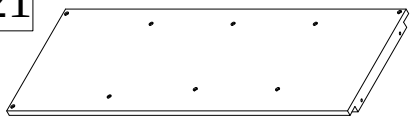	22 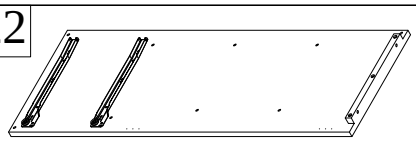	23
Cabinet Side Boards - 1pc	Cabinet Side Boards - 1pc	Cabinet backboard - 2pcs
24 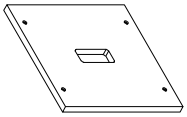	25 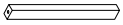	26 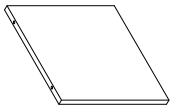
Roof Plank - 1pc	Cross the cabinet - 6pcs	Shelves - 4pcs
27 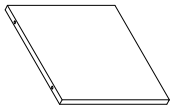	29 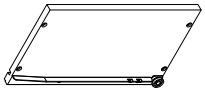	30 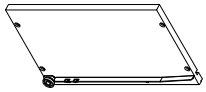
Partition board - 2pcs	Drawer side - 2pcs	Drawer side - 2pcs
31 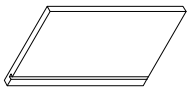	32 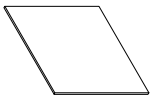	34 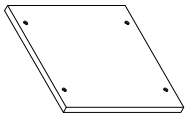
Backboard - 2pcs	Box bottom board - 2pcs	Roof Plank - 1pc
35 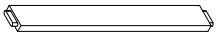	40 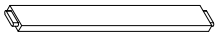	45 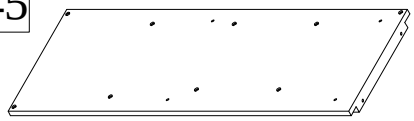
Puzzle along the middle - 1pc	Puzzle along the middle - 2pcs	Cabinet Side Boards - 1pc
46 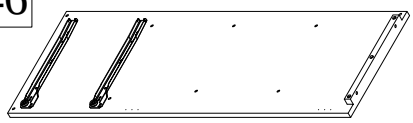		
Cabinet Side Boards - 1pc		

Part List

3	4 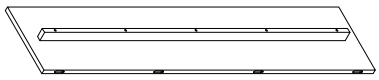	5 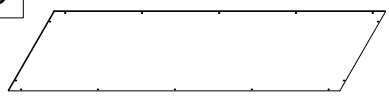
Rear Roof Board - 1pc	Front Roof Board - 1pc	Upper Backboard - 2pcs
6 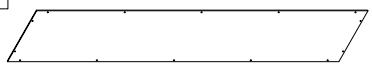	7 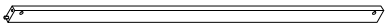	14 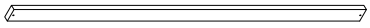
Lower Queen Board - 1pc	Quizzes - 4pcs	Pull frame rear puzzle - 2pcs
15 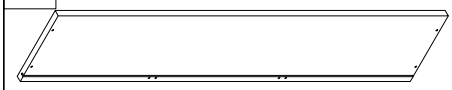	18	20 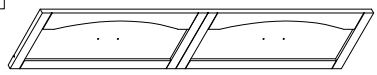
Backboard - 1pc	Drawer bottom board - 1pc	Drawer surface - 1pc
36 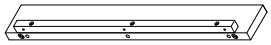	37	38
Puzzle along the frame - 2pcs	Puzzle along the middle - 1pc	Quiz outside - 1pc
39 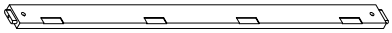	40 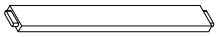	41 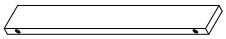
Quiz outside - 1pc	Puzzle along the middle - 4pcs	Puzzle along the frame - 2pcs
42 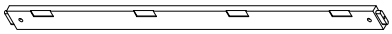	43	51 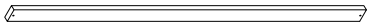
Outer frame puzzle - 1pc	Quiz outside - 1pc	Pull frame rear puzzle - 2pcs
52 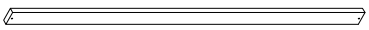		
Pull frame rear puzzle - 2pcs		

Part List

8 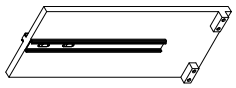	9 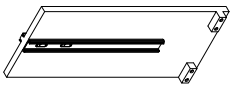	10 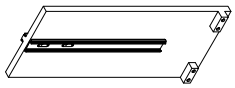
Side pull plank Left 1 - 1pc	Side plank pulling Left 2 - 1pc	Side plank pulls Left 3 - 1pc
11 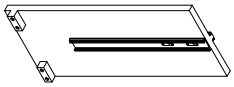	12 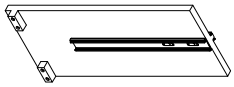	13 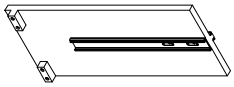
Right pull hip board 1 - 1pc	Hip board pulled right 2 - 1pc	Hip board pulled right 3 - 1pc
16 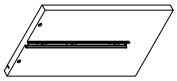	17 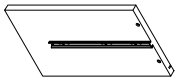	28 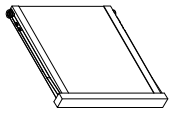
Left hip plank - 1pc	Right hip plank - 1pc	Drawer board - 2pcs
33 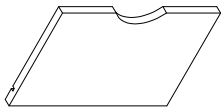	35	44 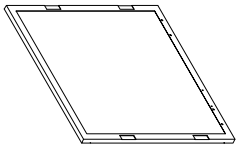
Pocket face board - 2pcs	Puzzle along the middle - 5pcs	Frame assembly - 1pc
47 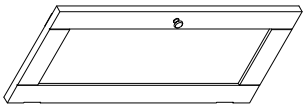	48 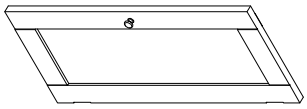	49 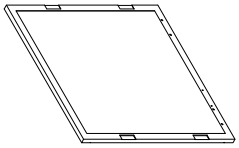
Door - 1pc	Door - 1pc	Frame assembly - 1pc
50		
Puzzle along the middle - 1pc		

Hardware List

A 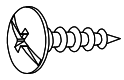	B 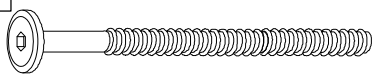	C 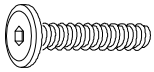
Screw # 3.5 x 15mm - 78pcs	Hex-head bolt - Ø1/4" x 100mm - 8pcs	Hex-head bolt - Ø1/4" x 25mm - 8pcs
D 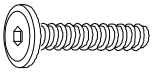	E 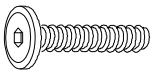	F
Hex-head bolt - Ø1/4" x 50mm - 8pcs	Hex-head bolt - Ø1/4" x 30 mm - 54pcs	Horizontal-hole bolt - 1/4 x 15 mm - 16pcs
G 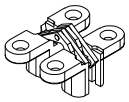	H	I 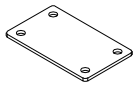
Negative Margin Table - 4pcs	Wheels - 10pcs	Piece of Iron - 2pcs
J	K	L
Lock In - 2pcs	External Key - 2pcs	Screw # 3.5 x 25mm - 78pcs
N	P	Q 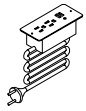
Screw # 3.5 x 15mm - 68pcs	Screw Handle - 14pcs	USB Power Outlet
R 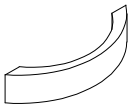	S 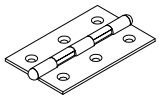	T 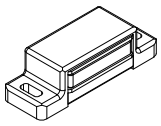
Iron Grip - 6pcs	Large Margin Table - 8pcs	Department of Sniffing - 2pcs
U	V	W 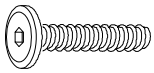
Wooden Handle - 2pcs	K 4 mm - 1pc	Hex-head bolt - Ø1/4" x 15mm - 8pcs

Please sort out all parts before you begin to assembly the item. This is to make sure you always use the correct part.

ASSEMBLY TOOLS REQUIRED (NOT INCLUDED)

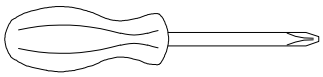

PLEASE BE CAREFUL DO NOT DAMAGE THE HOLE POSITION WHEN YOU USE POWER TOOLS !

STEP 1

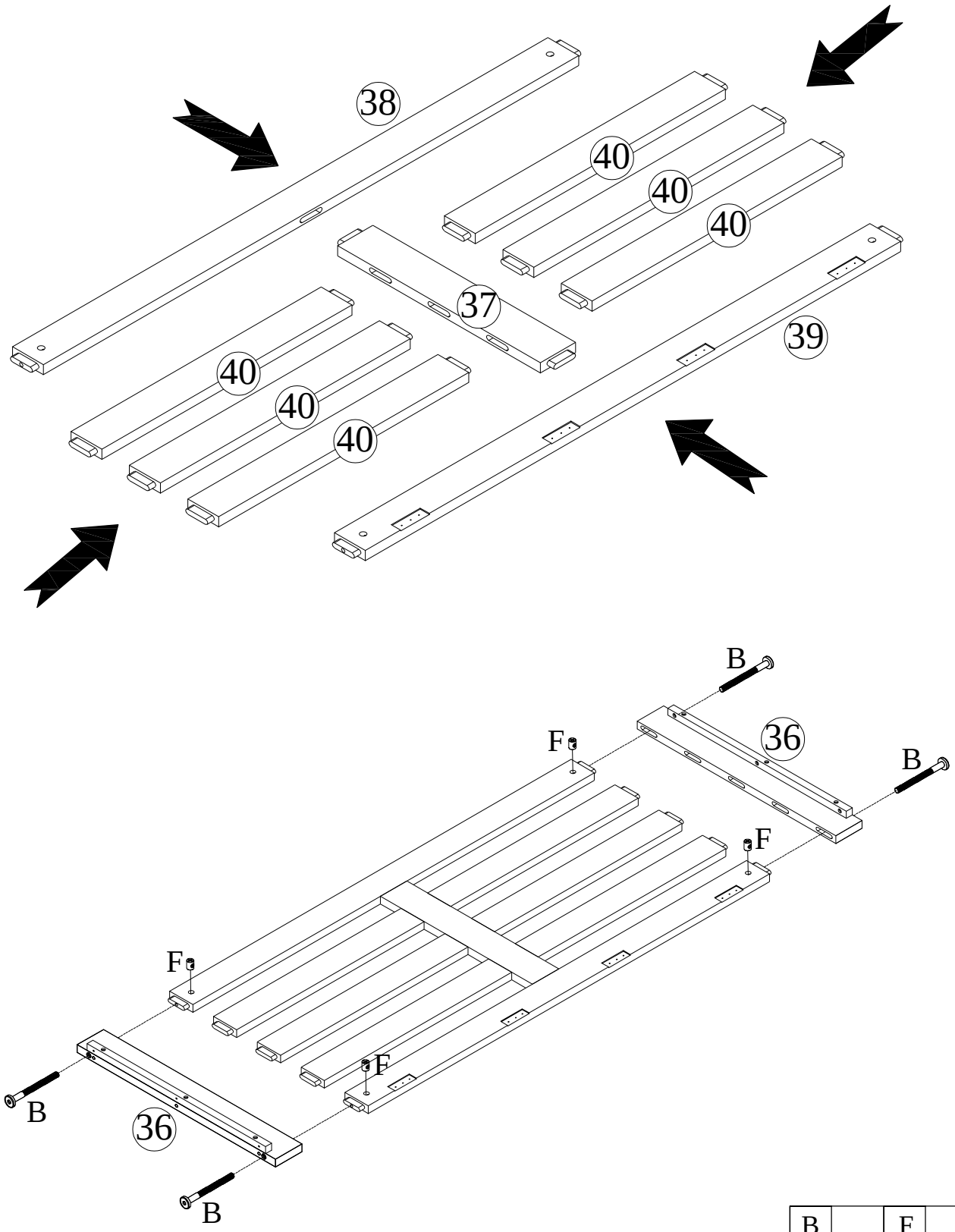

B	F
4	4

STEP 2

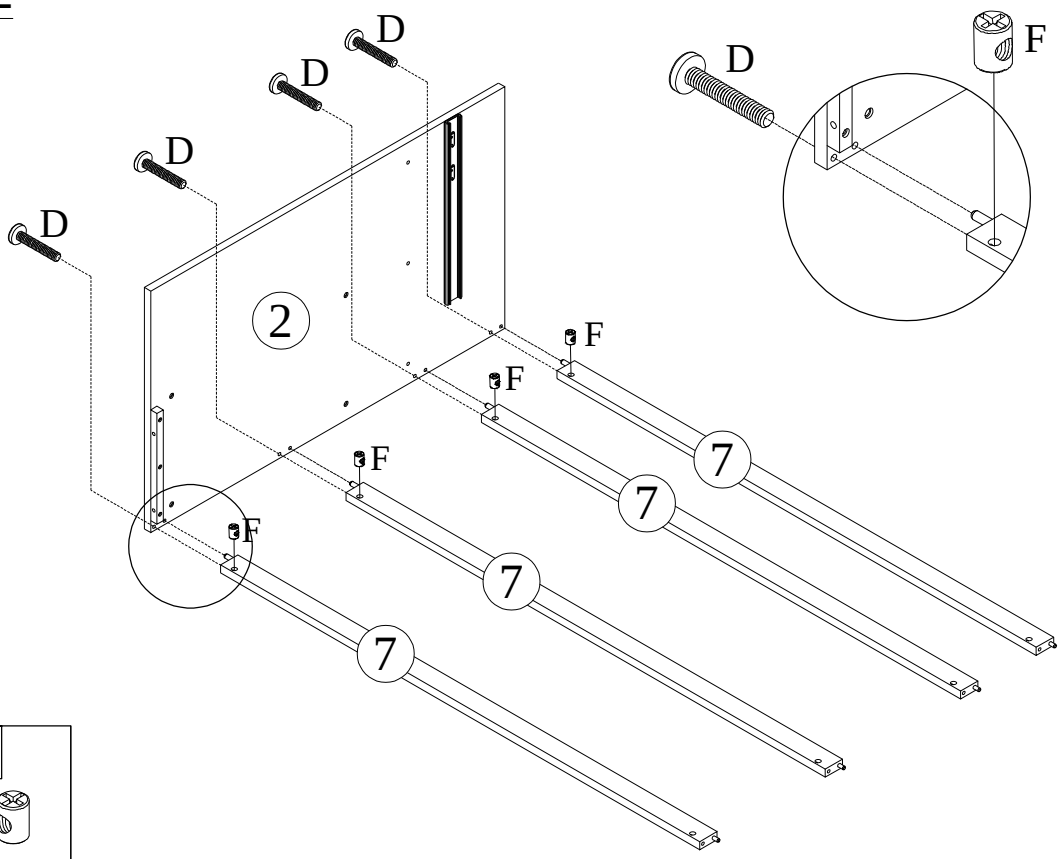

D	F
4	4

STEP 3

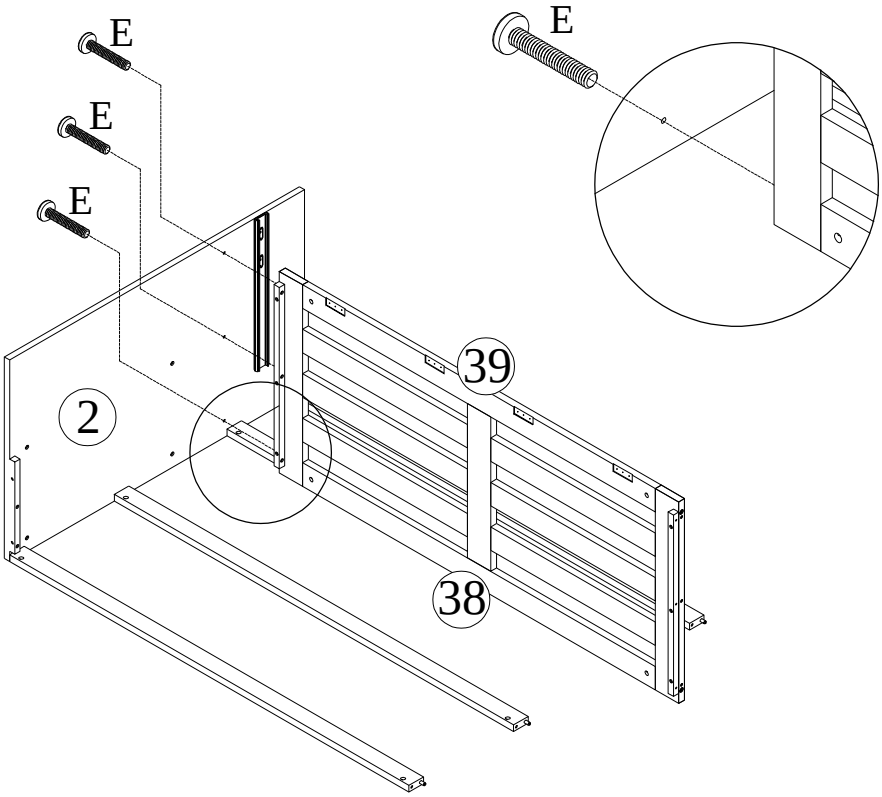

E
3

STEP 4

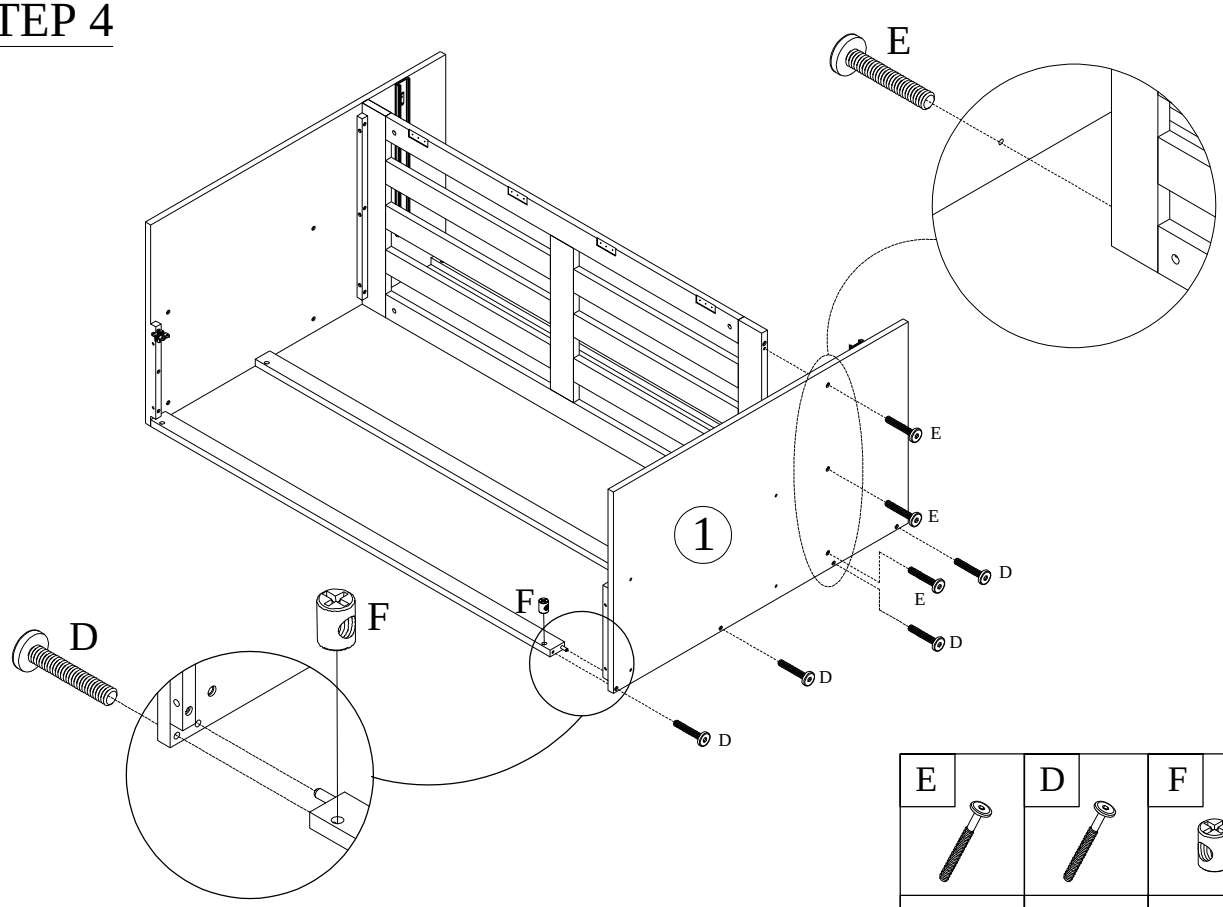

E	D	F
3	4	4

STEP 5

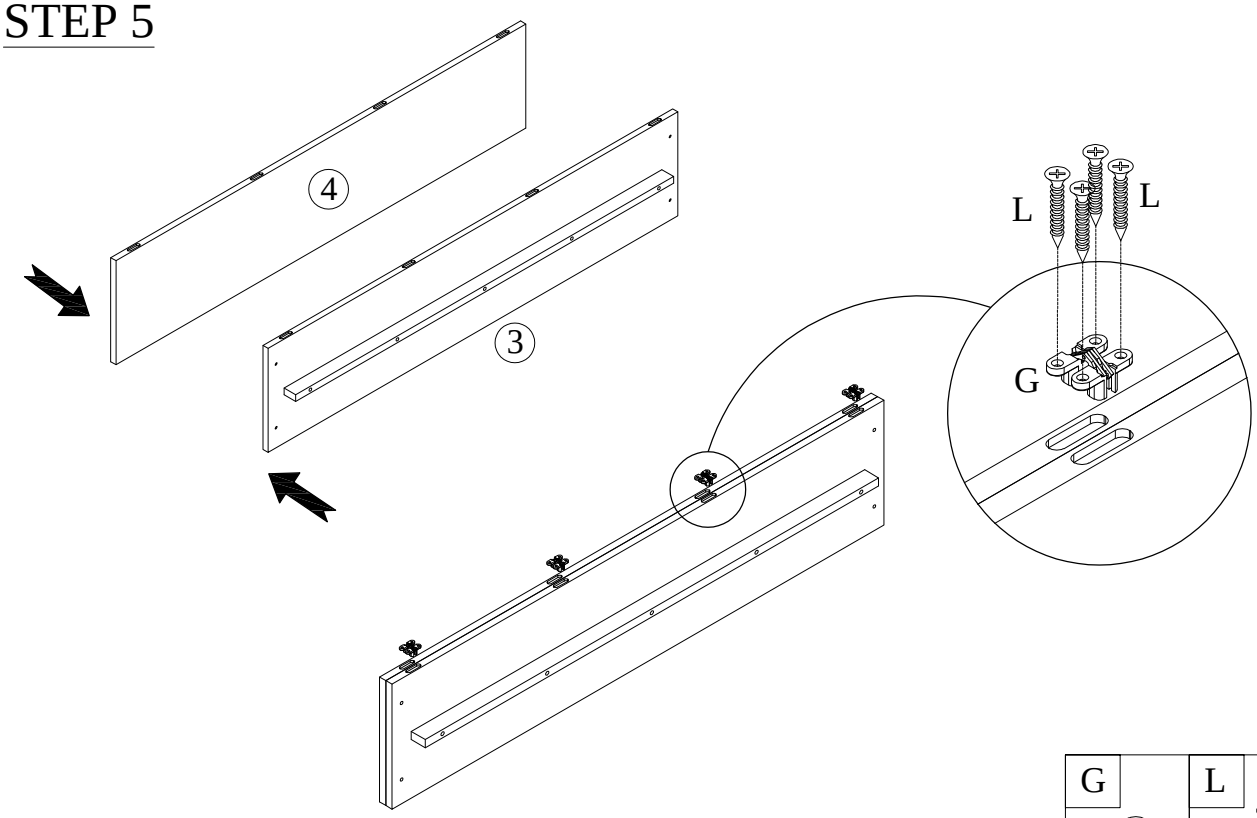

G	L
4	16

STEP 6

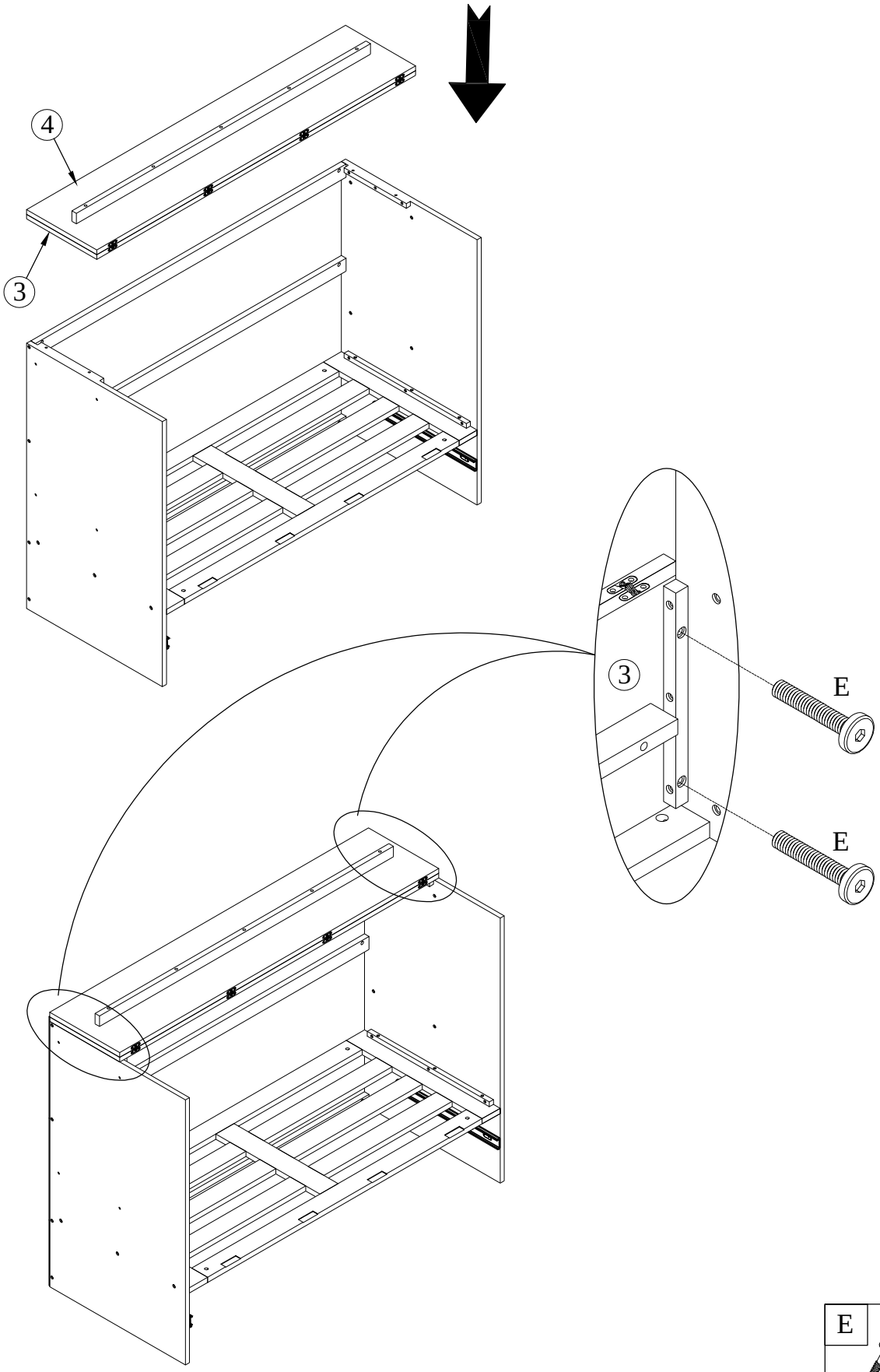

E	
4	

STEP 7

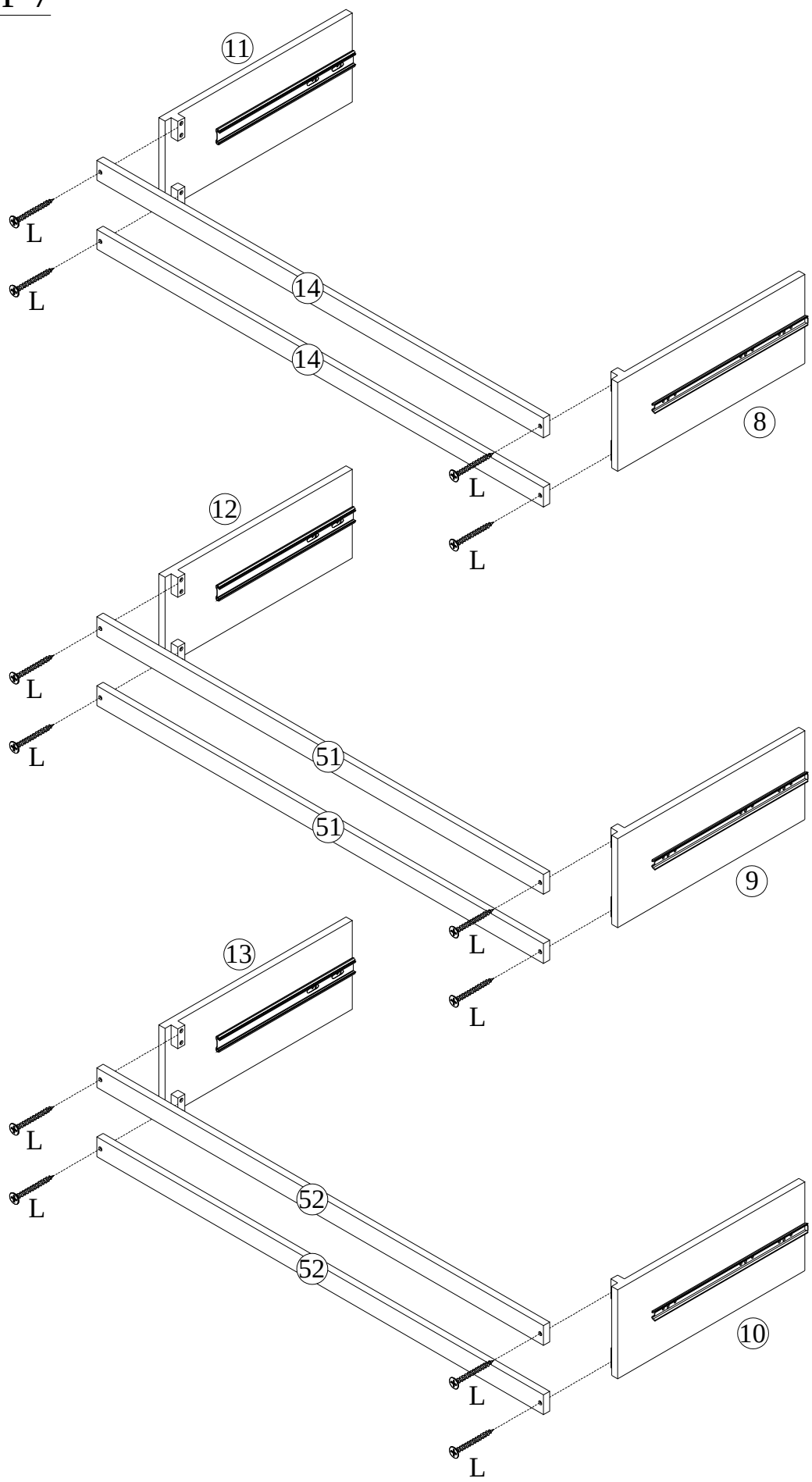

STEP 8

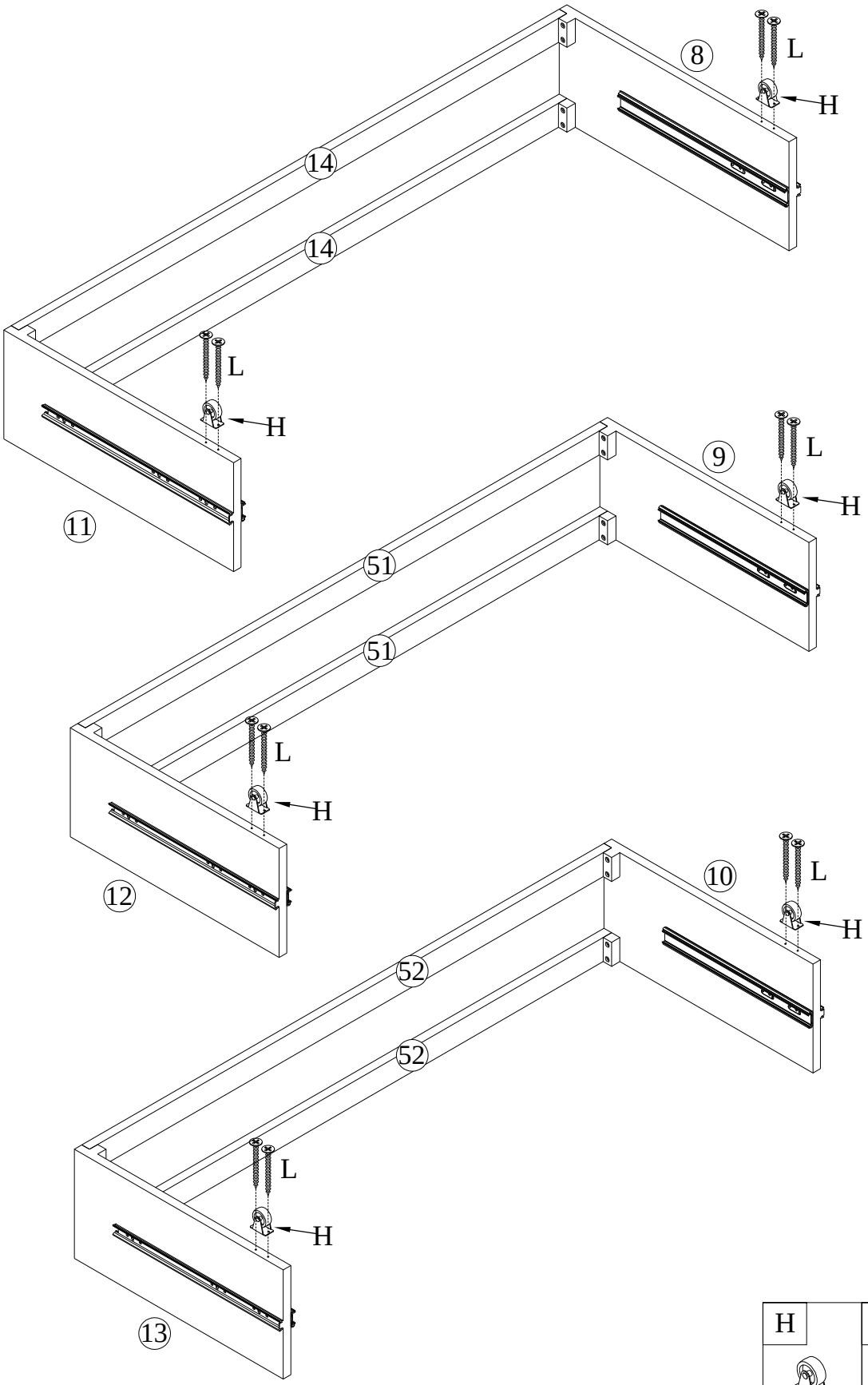

H	L
6	12

STEP 9

L
14

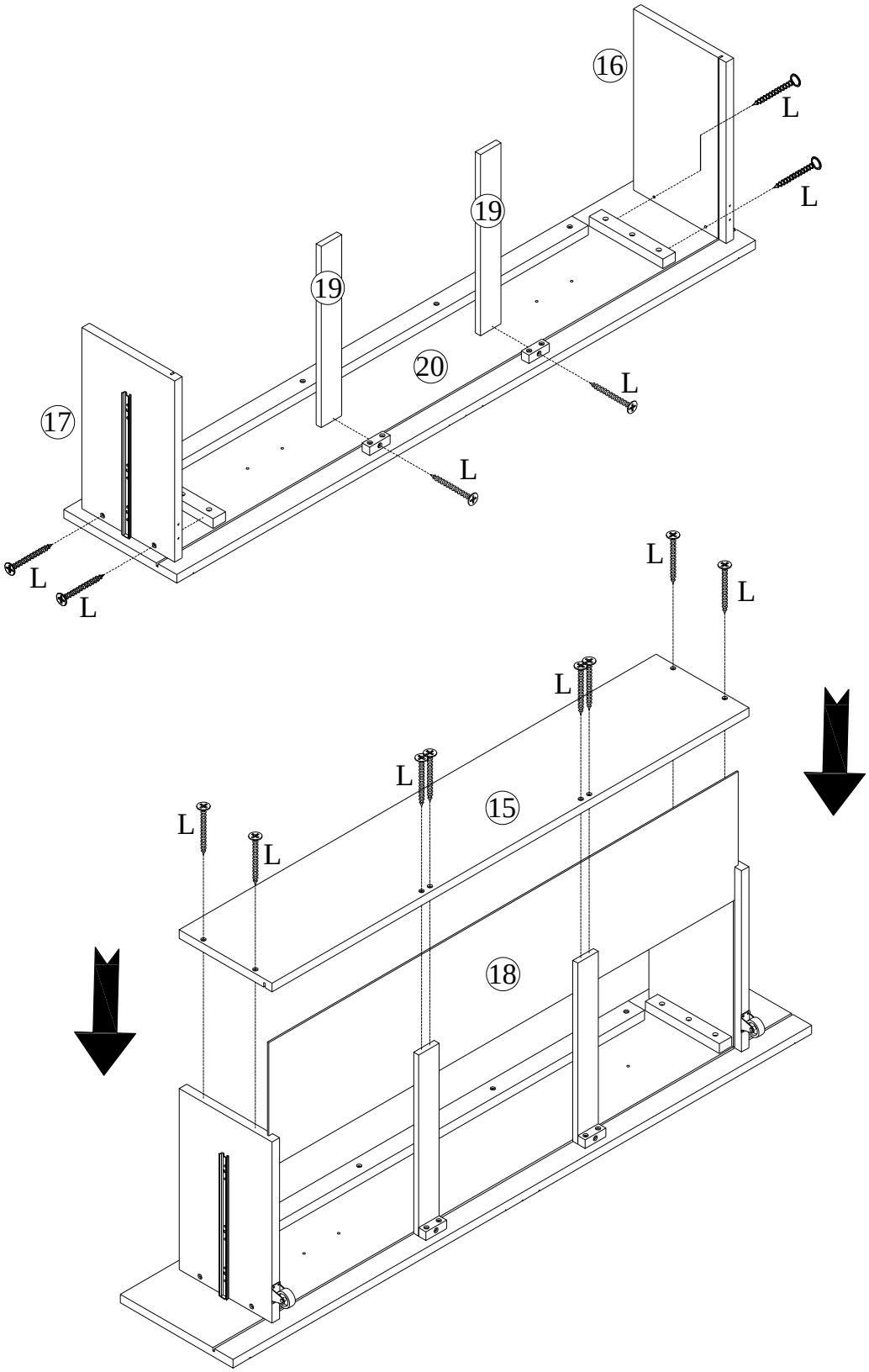

STEP 10

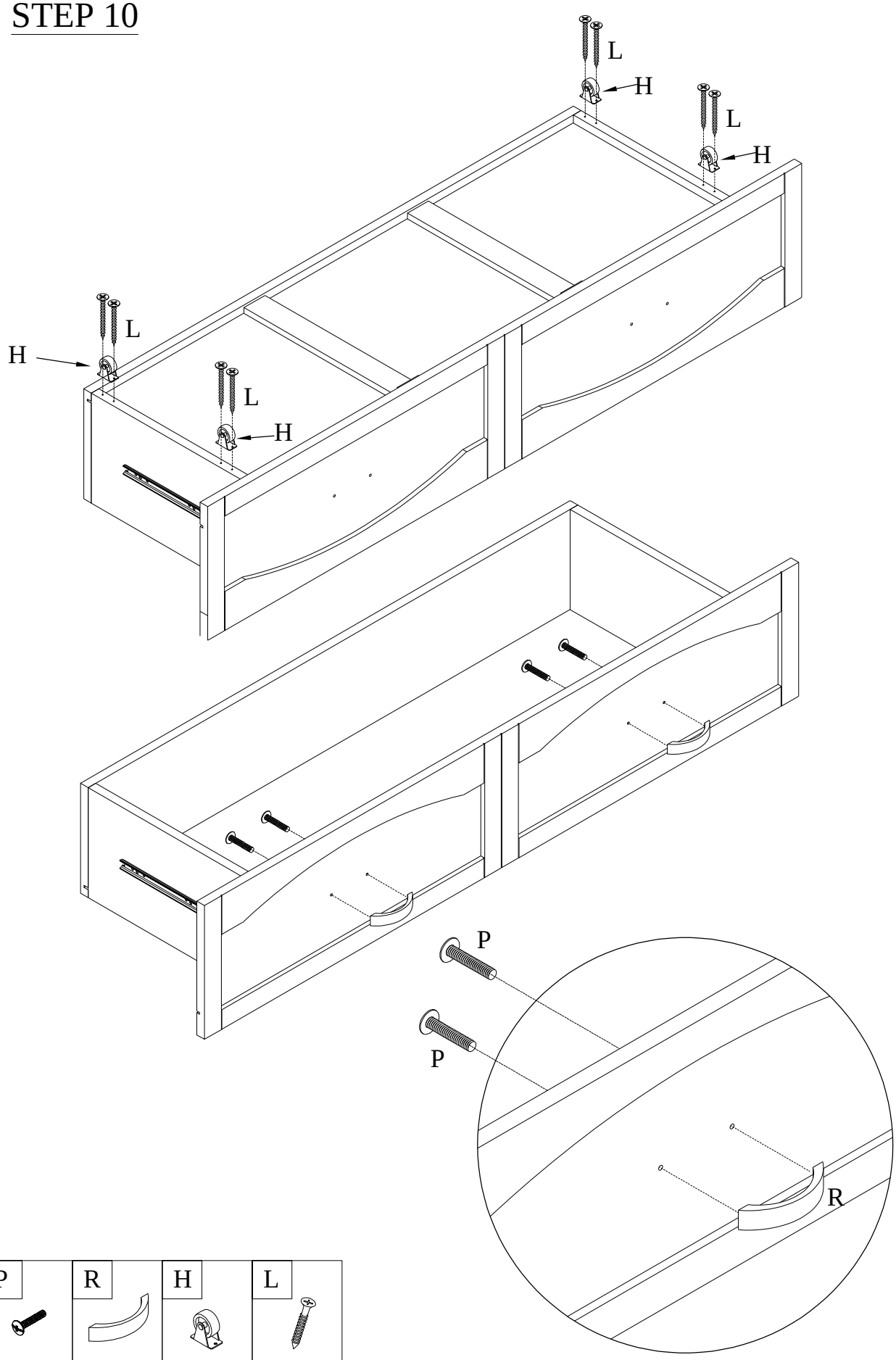

P	R	H	L
4	2	4	8

STEP 11

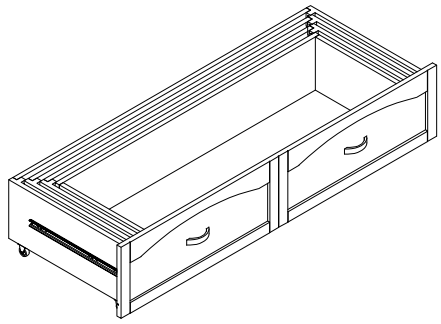

Complete

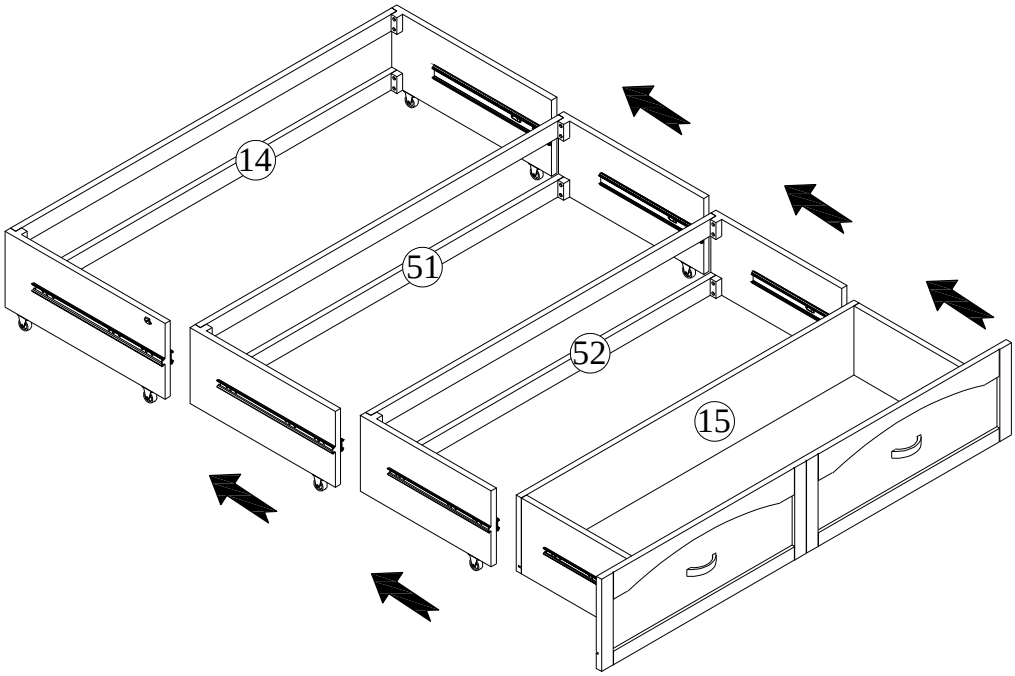

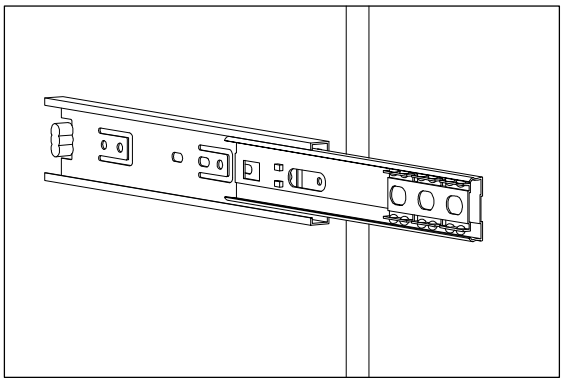

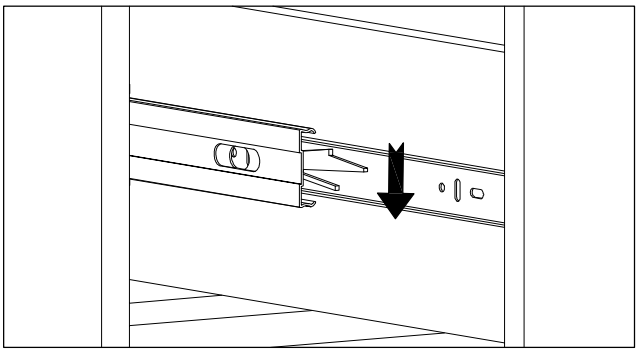

STEP 12

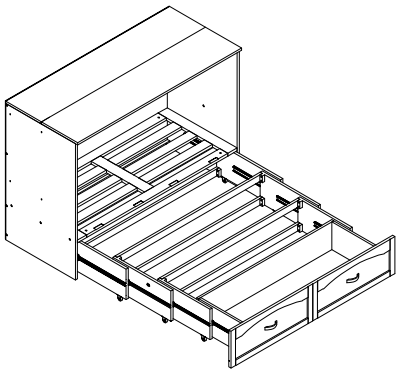

Complete

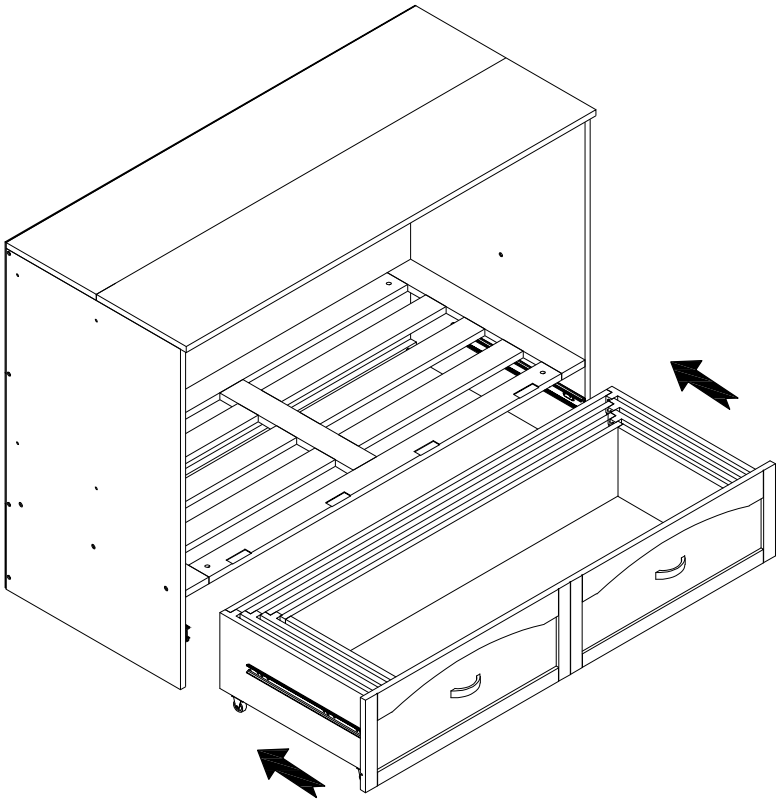

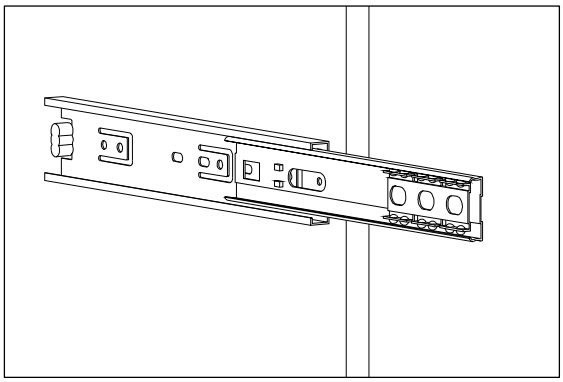

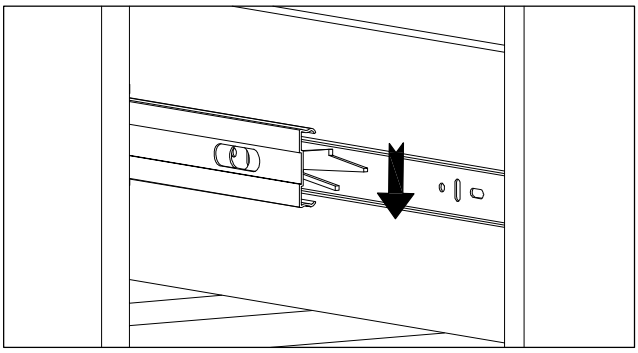

STEP 13

P	R
4	2

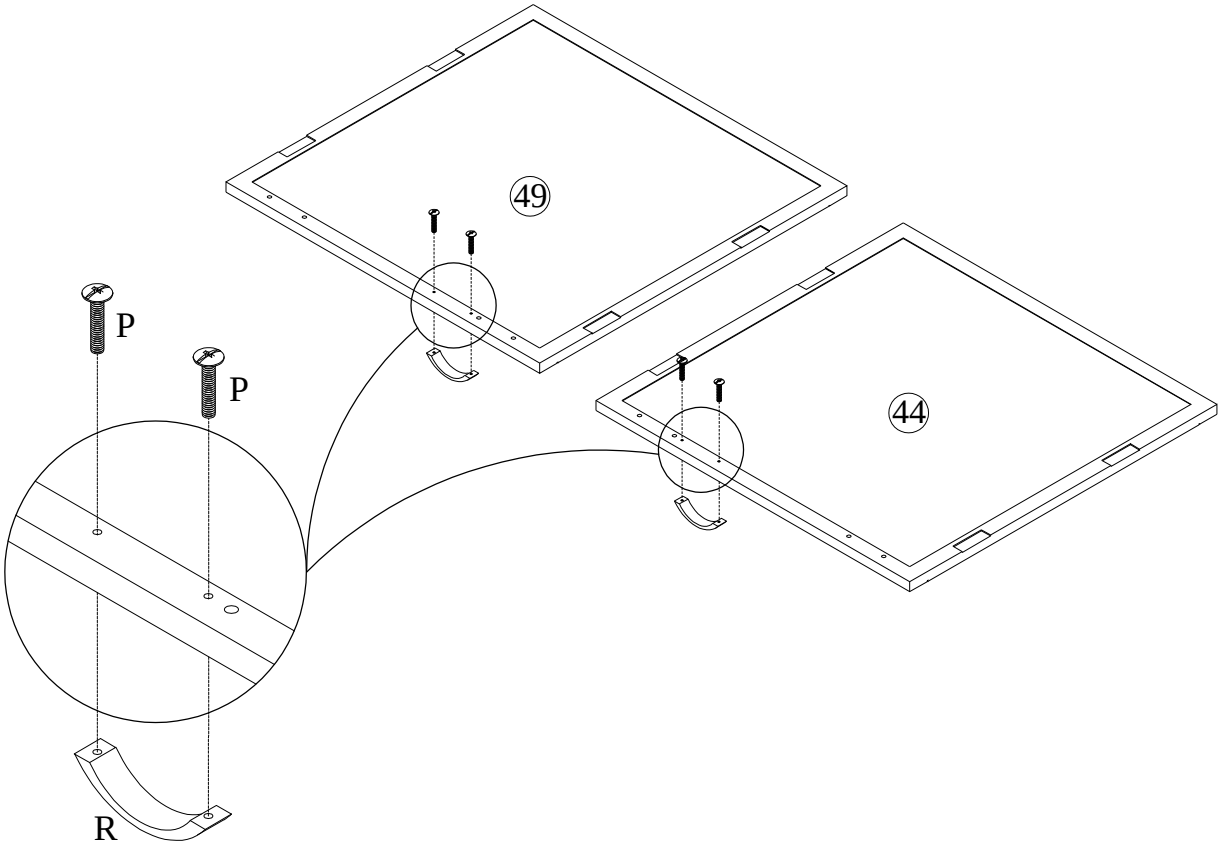

STEP 14

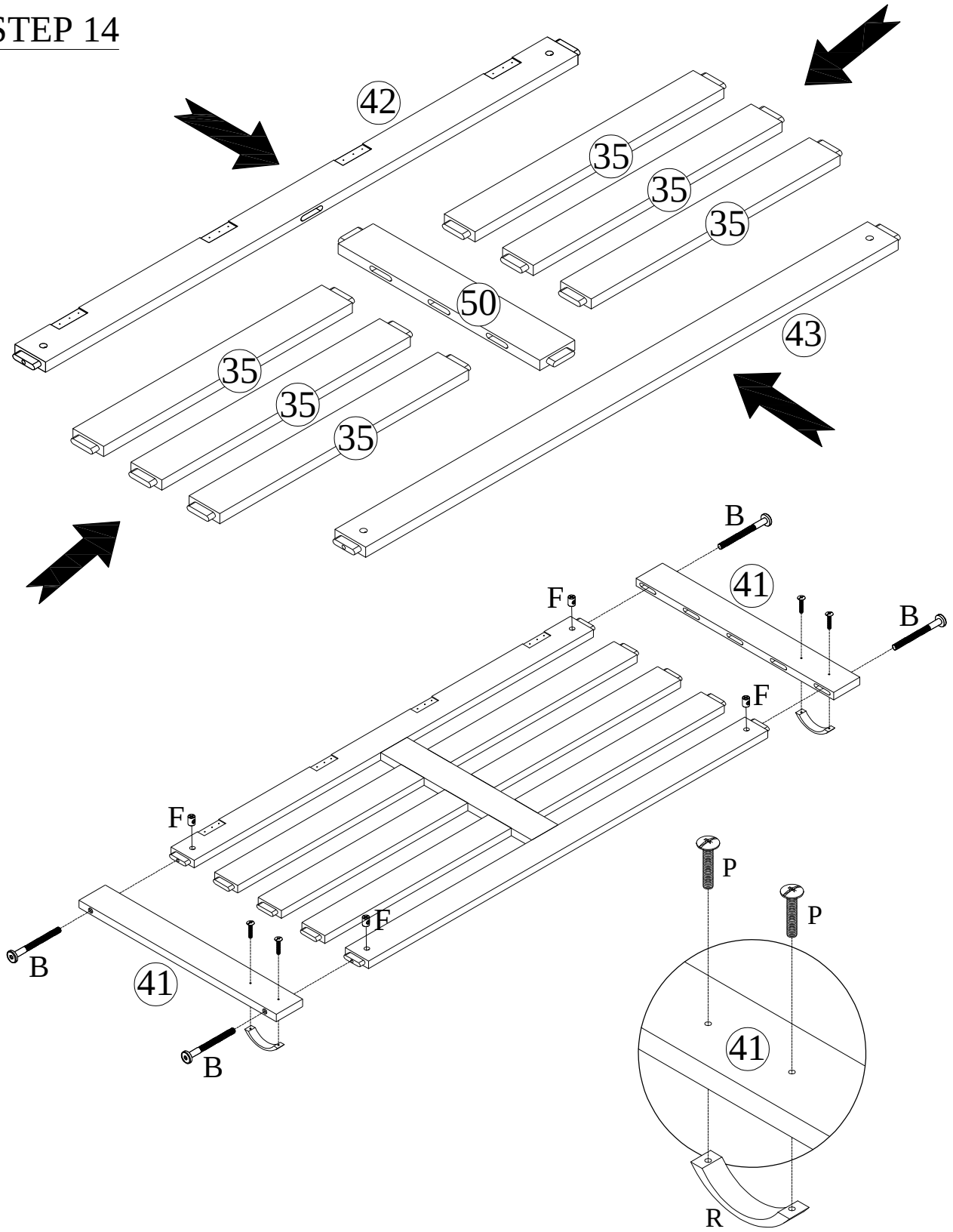

P	R	B	F
4	2	4	4

STEP 15

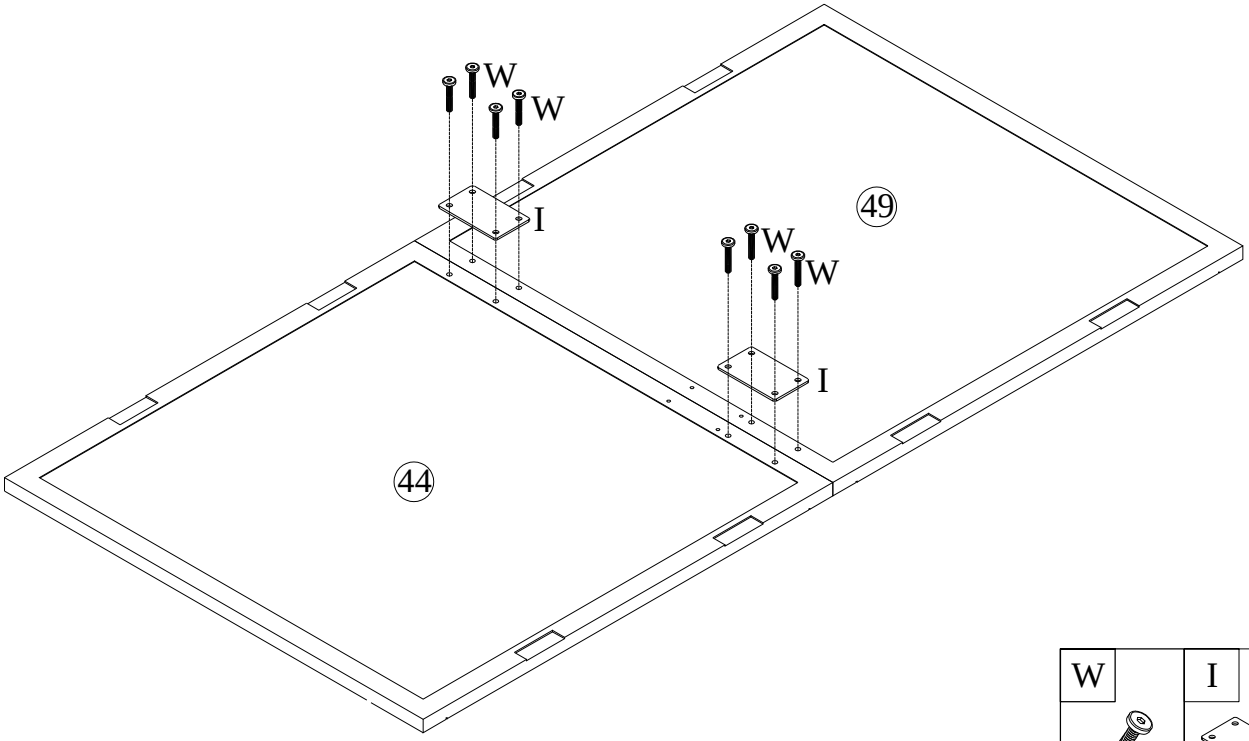

W	I
8	2

STEP 16

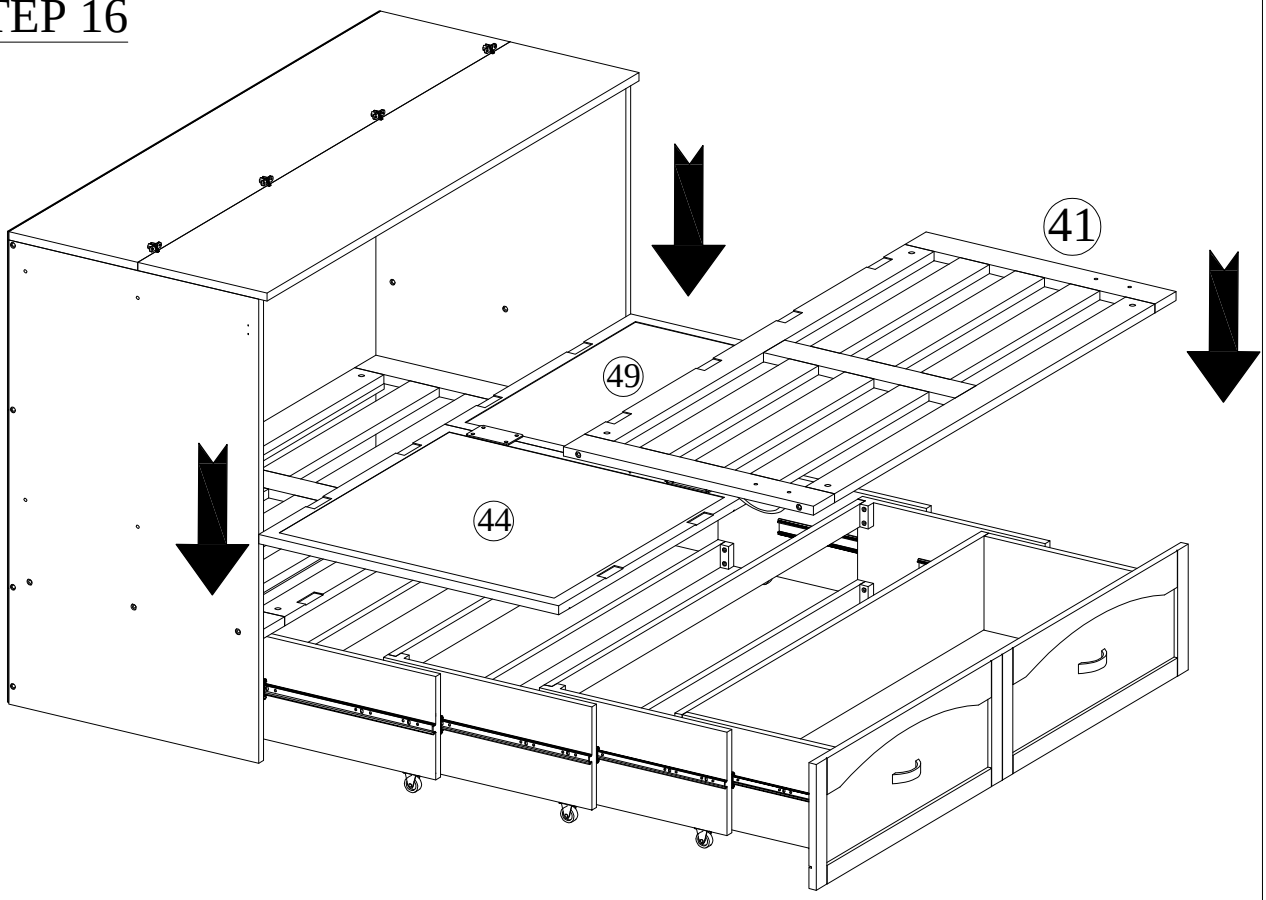

STEP 17

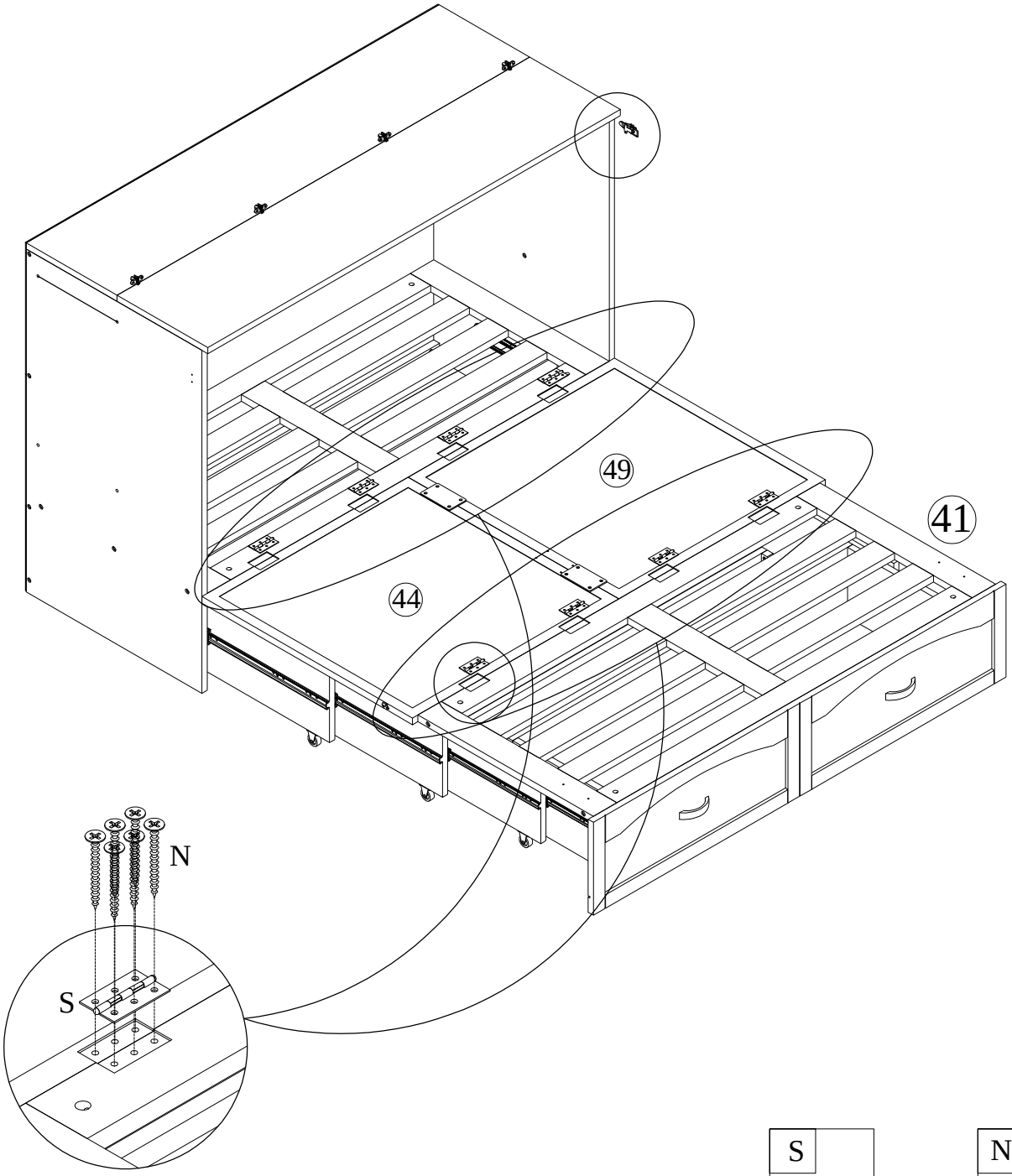

S	N
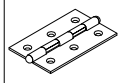	
8	52

STEP 18

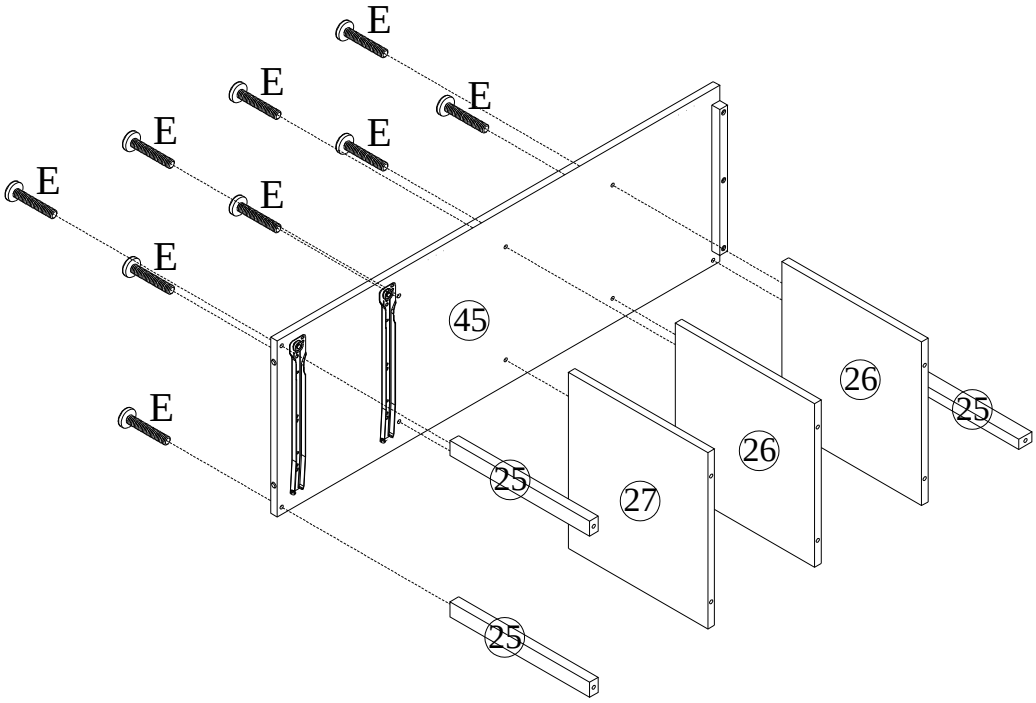

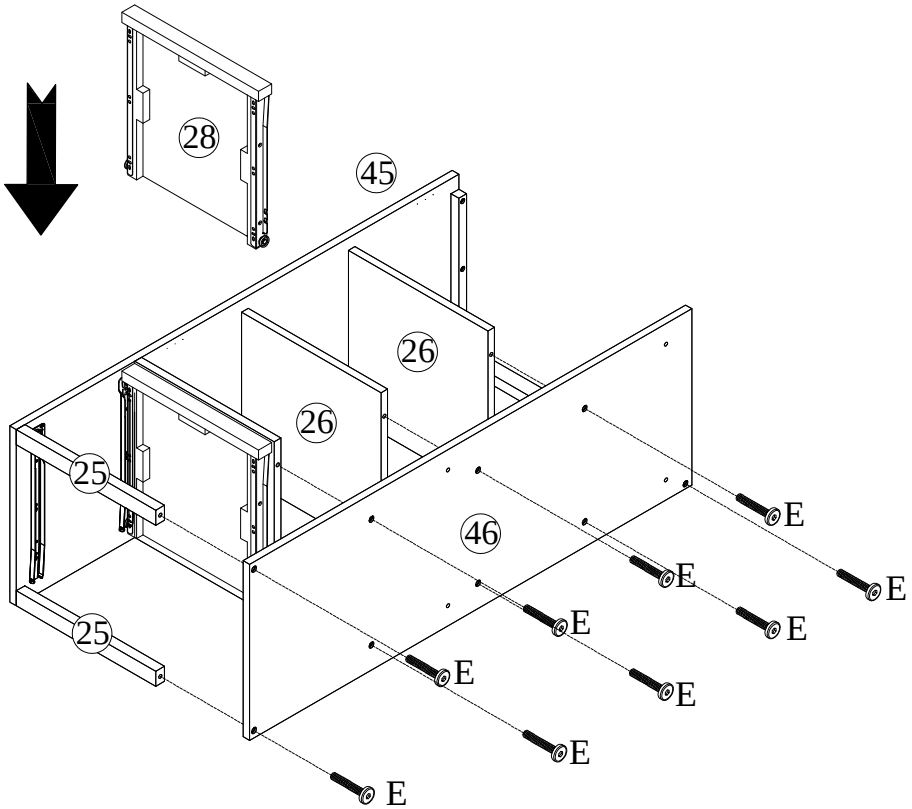

E
18

STEP 19

A	T	E
2	1	4

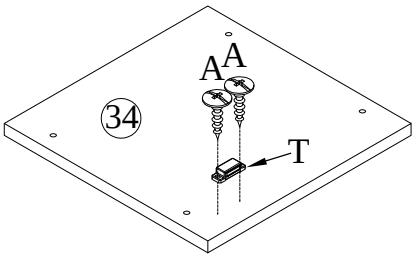

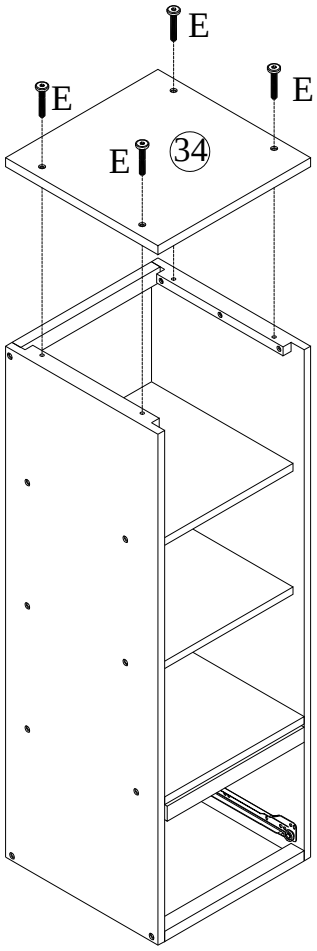

STEP 20

N	U	P
6	1	1

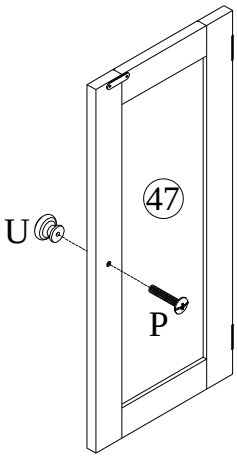

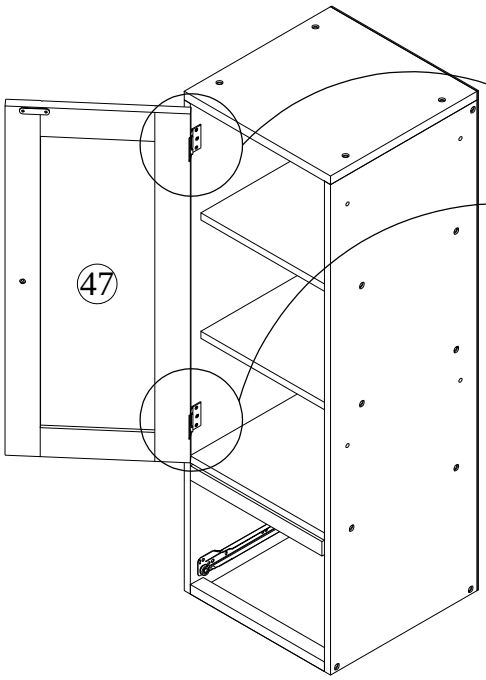

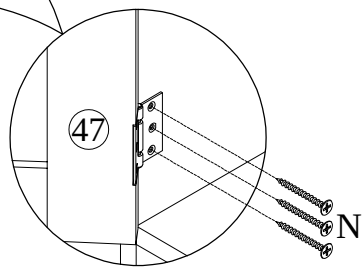

STEP 21

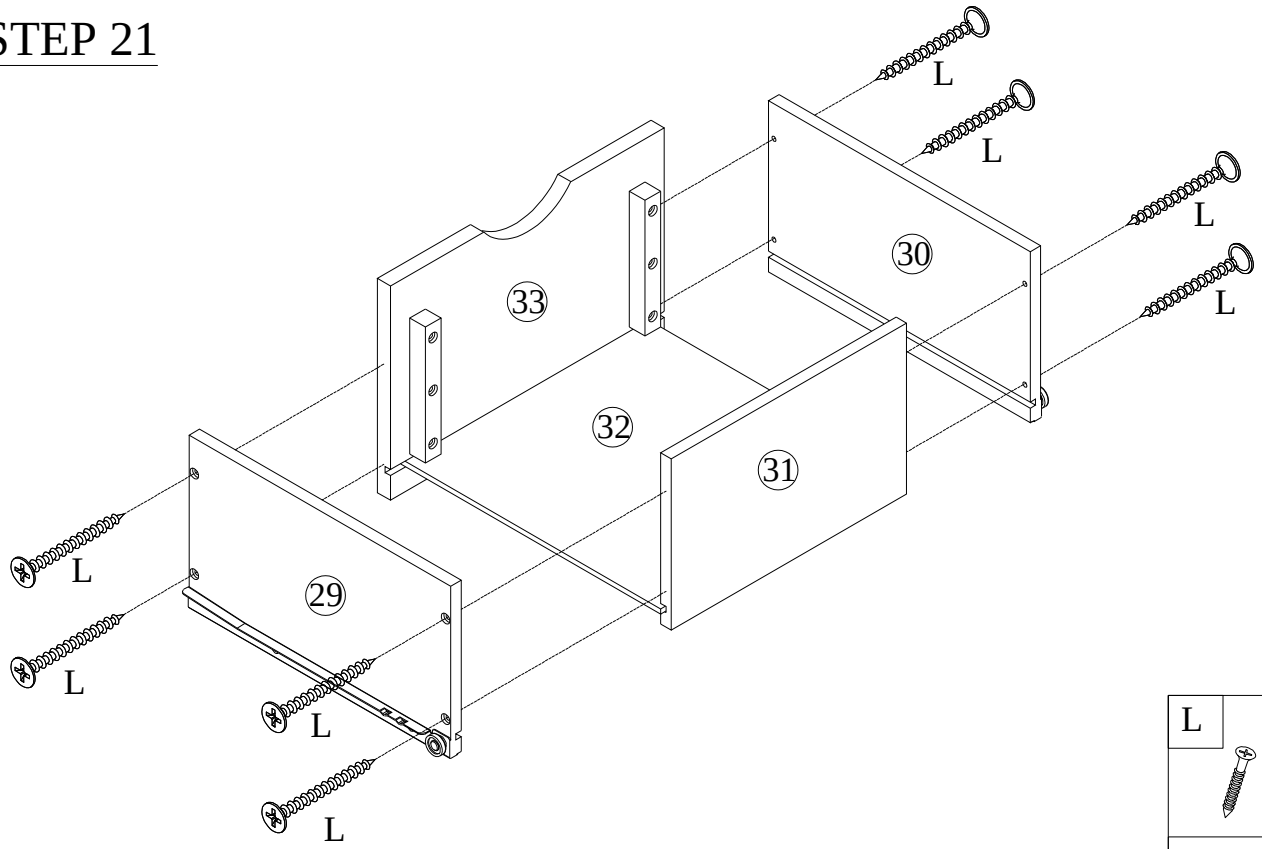

L	
	8

STEP 22

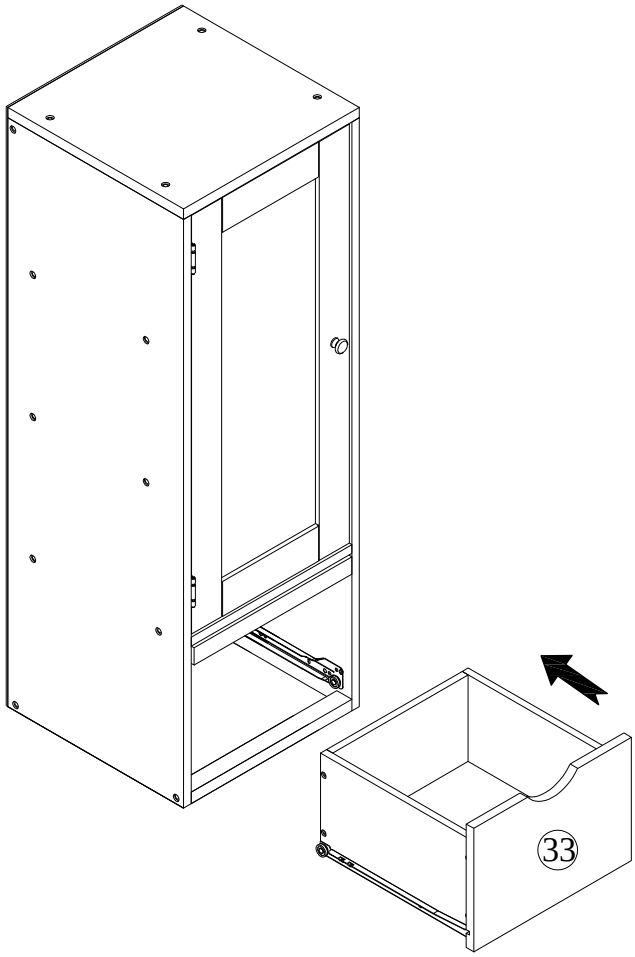

STEP 23

A
14

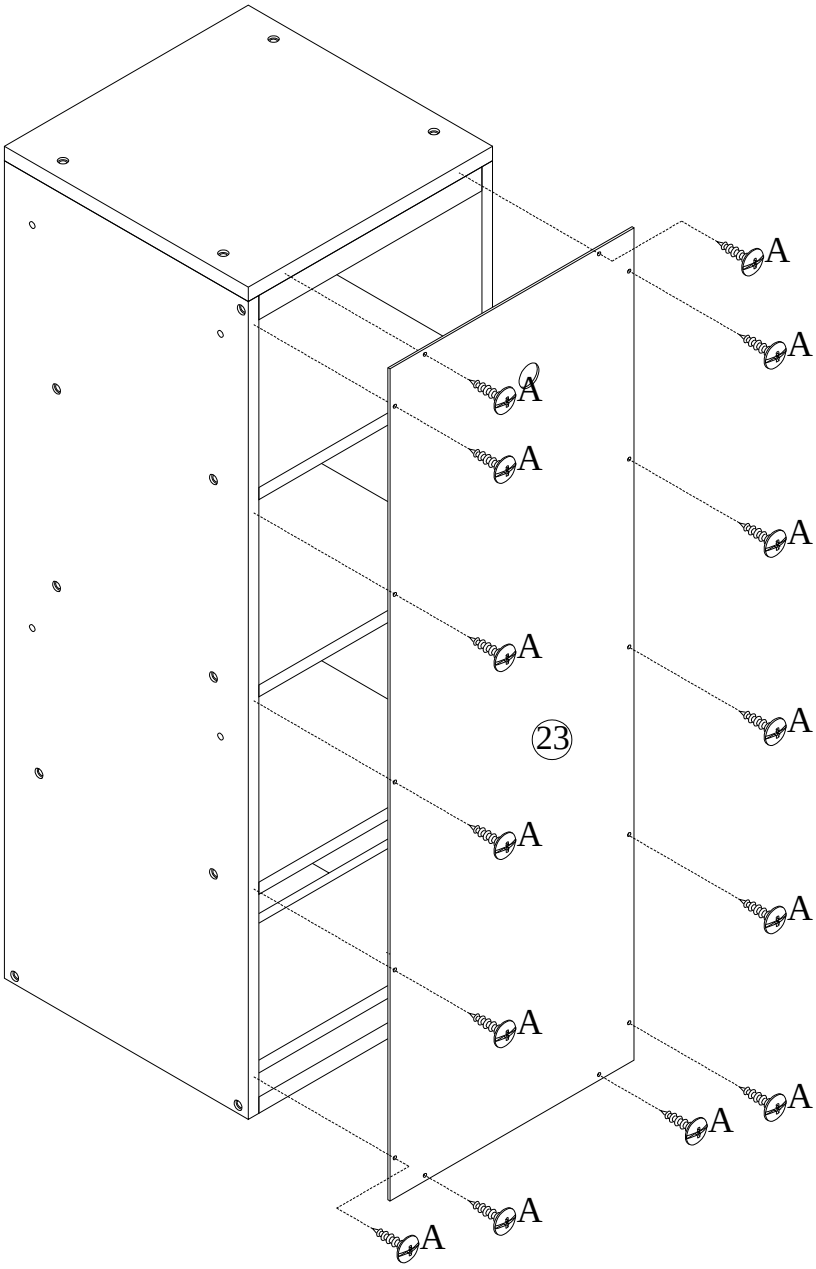

STEP 24

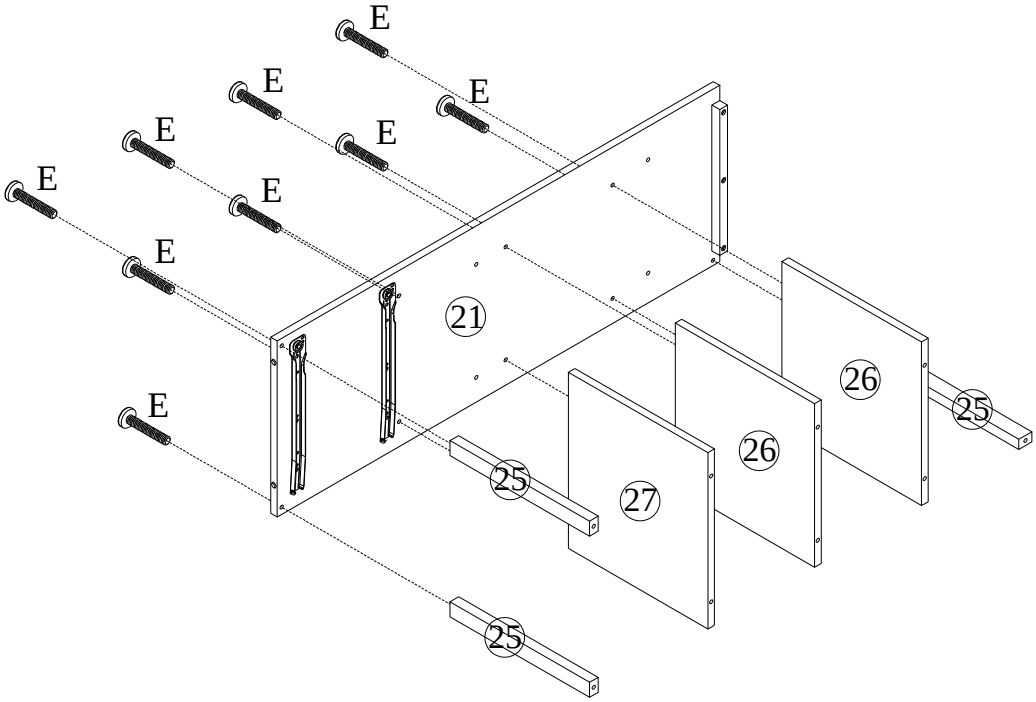

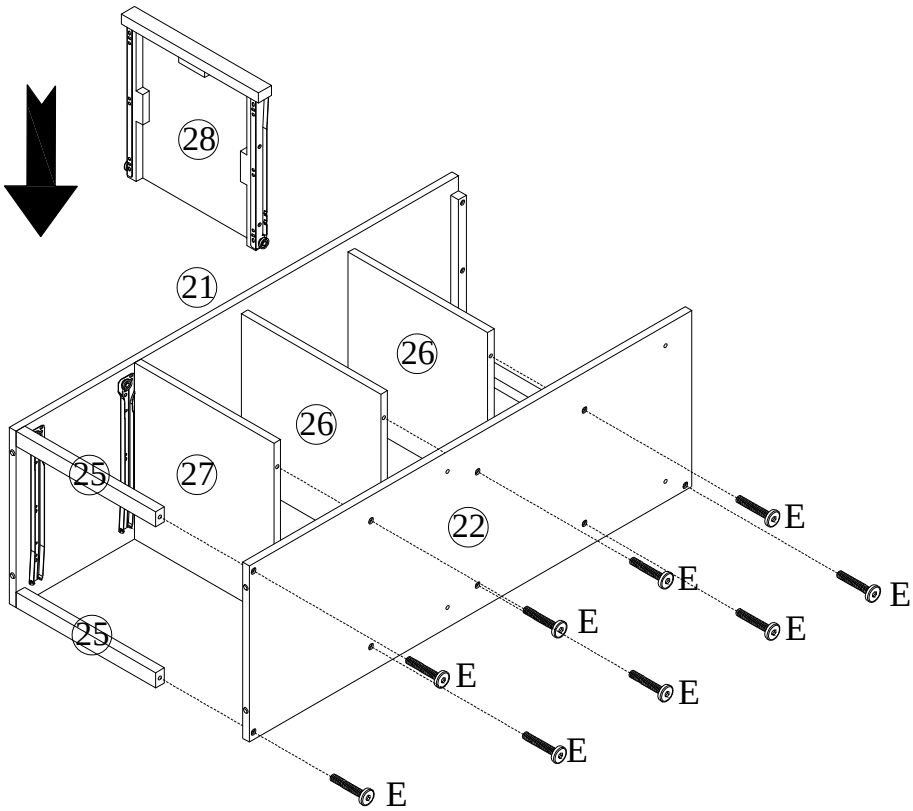

E	
	18

STEP 25

A	T	E
2	1	4

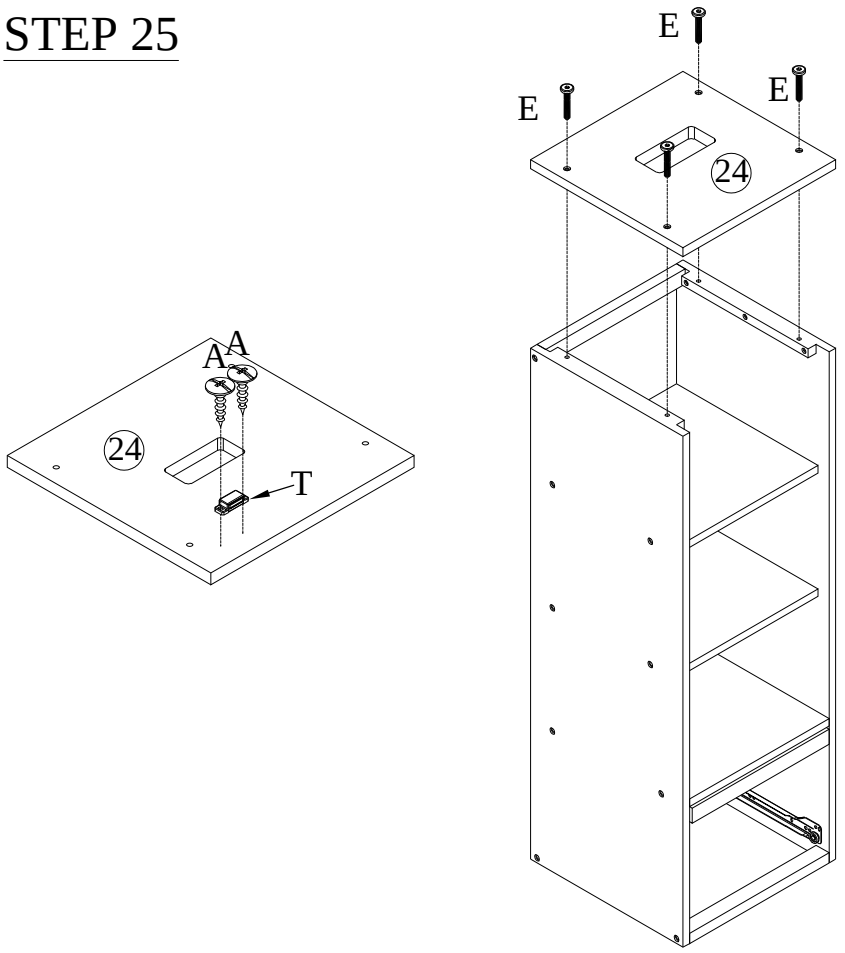

STEP 26

N	U	P
6	1	1

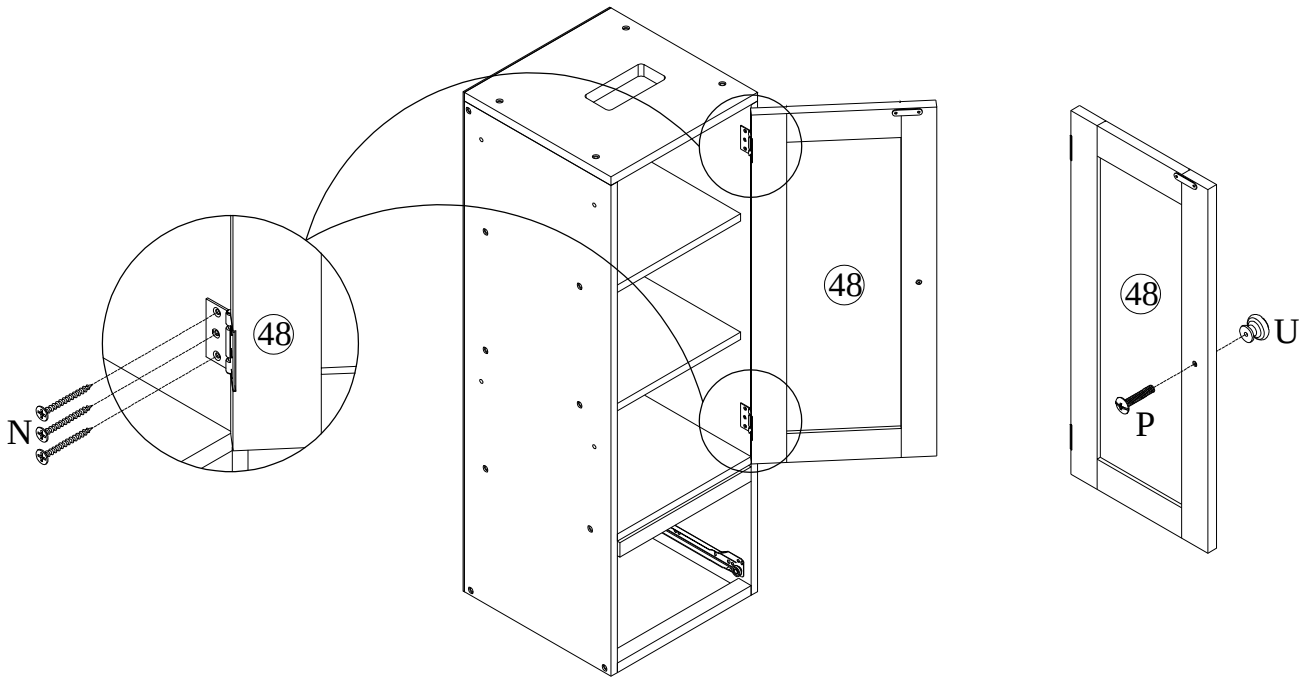

STEP 27

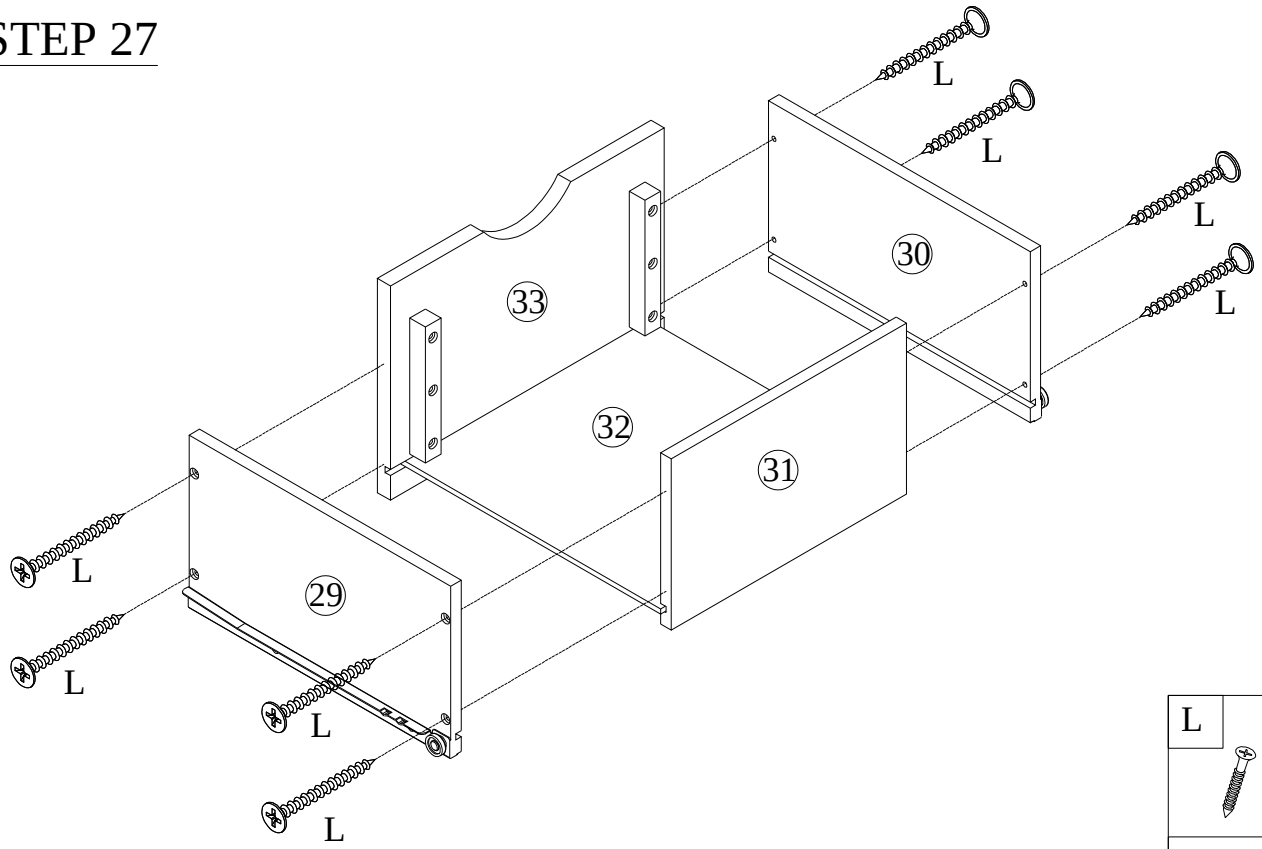

L	
	8

STEP 28

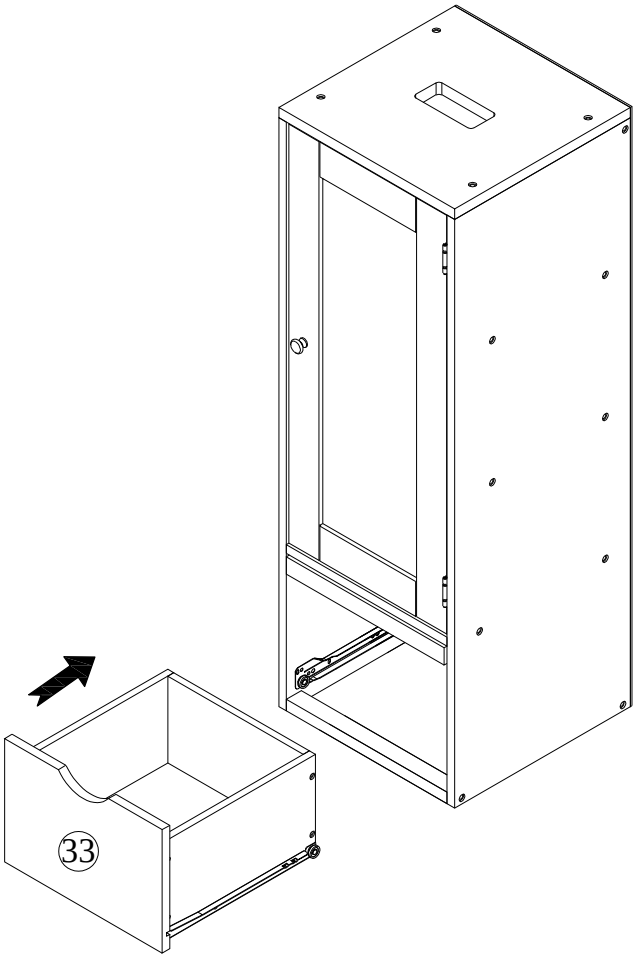

STEP 29

A
14

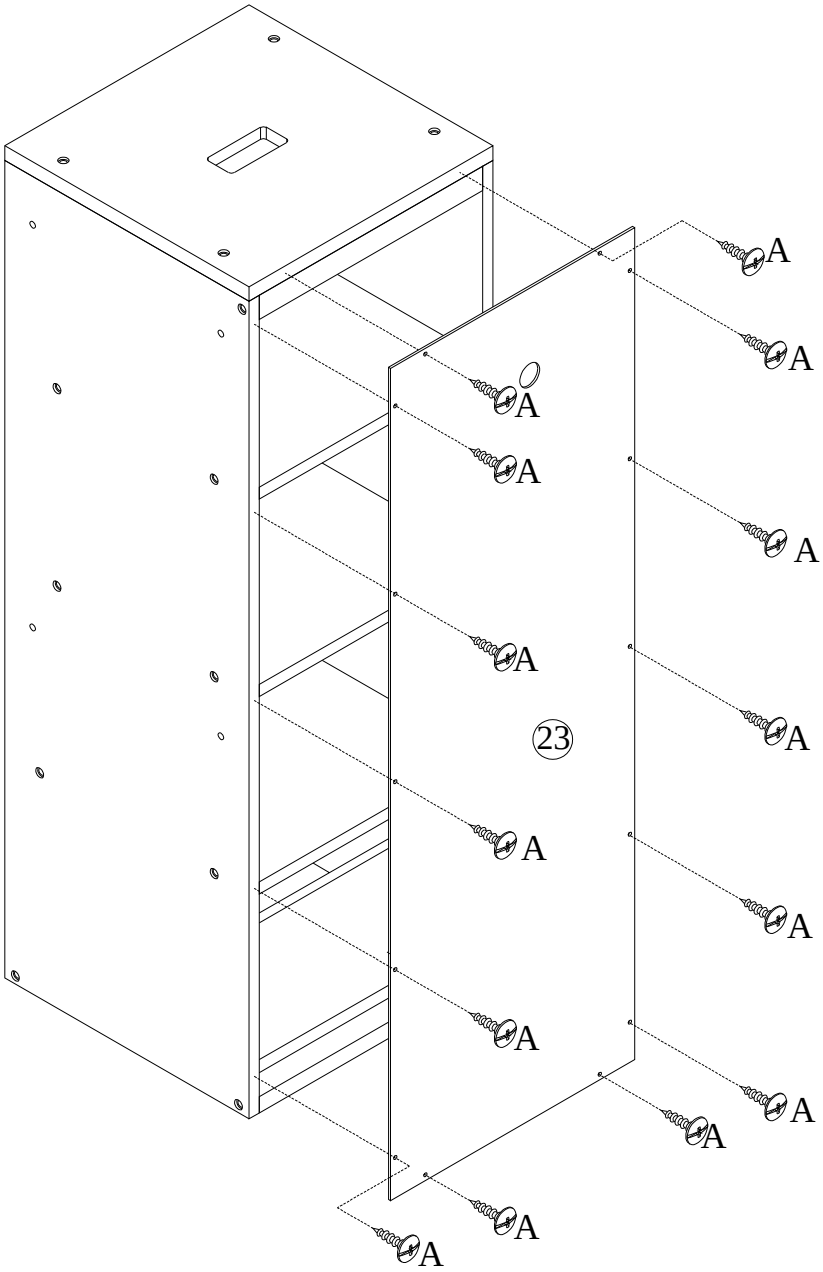

STEP 30

Q	A
1	2

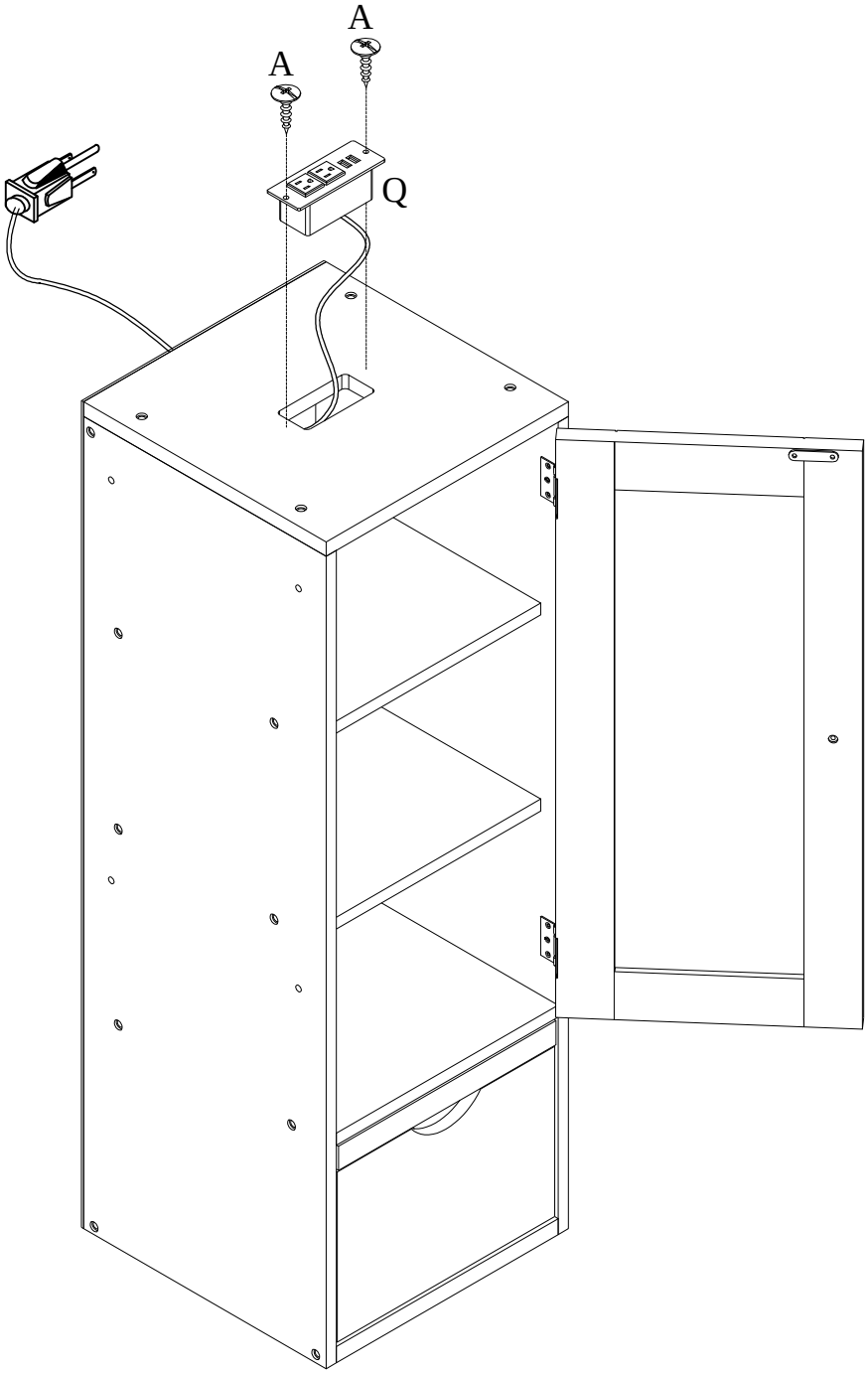

STEP 31

C
8

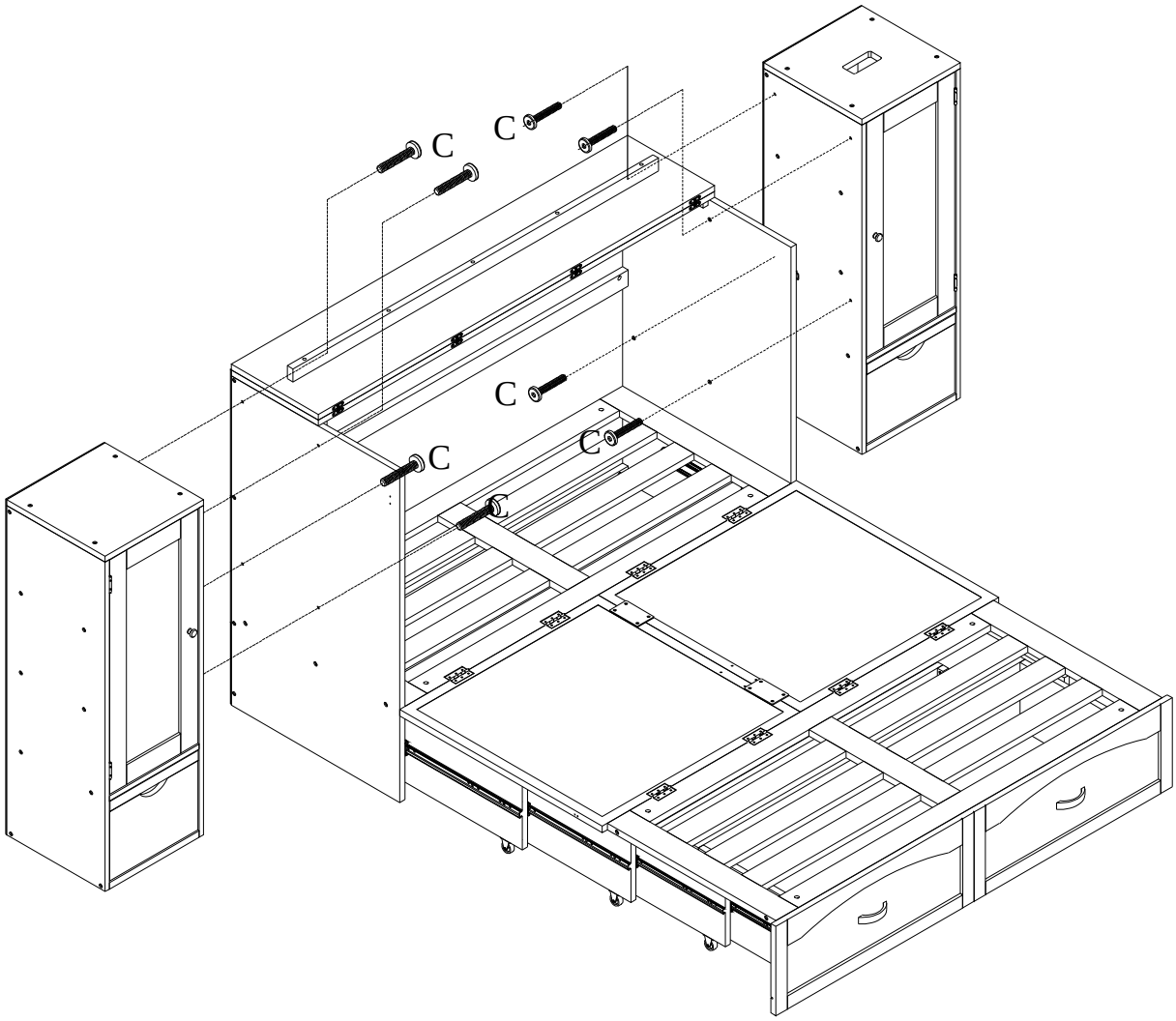

STEP 32

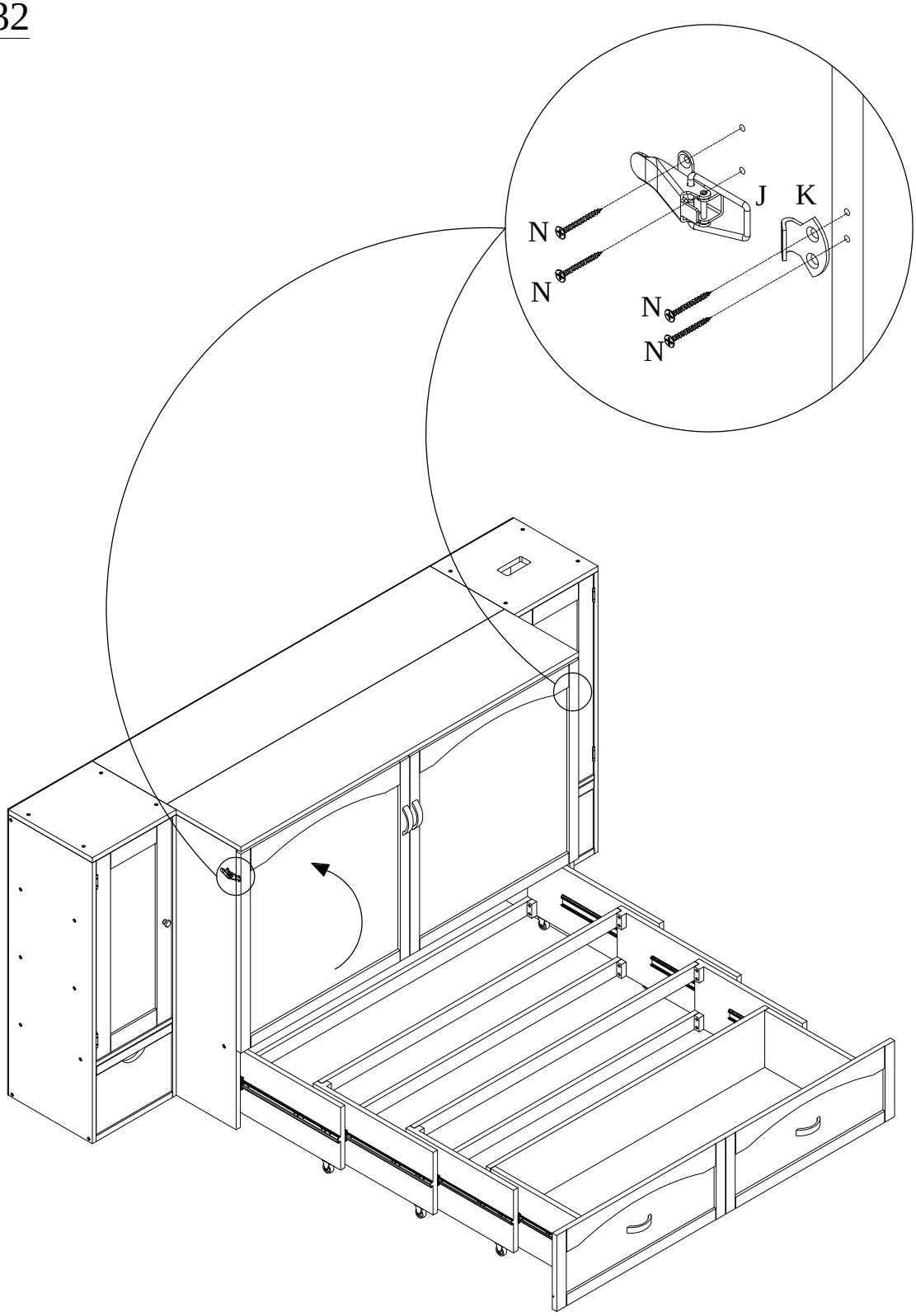

J	K	N
2	2	8

STEP 32

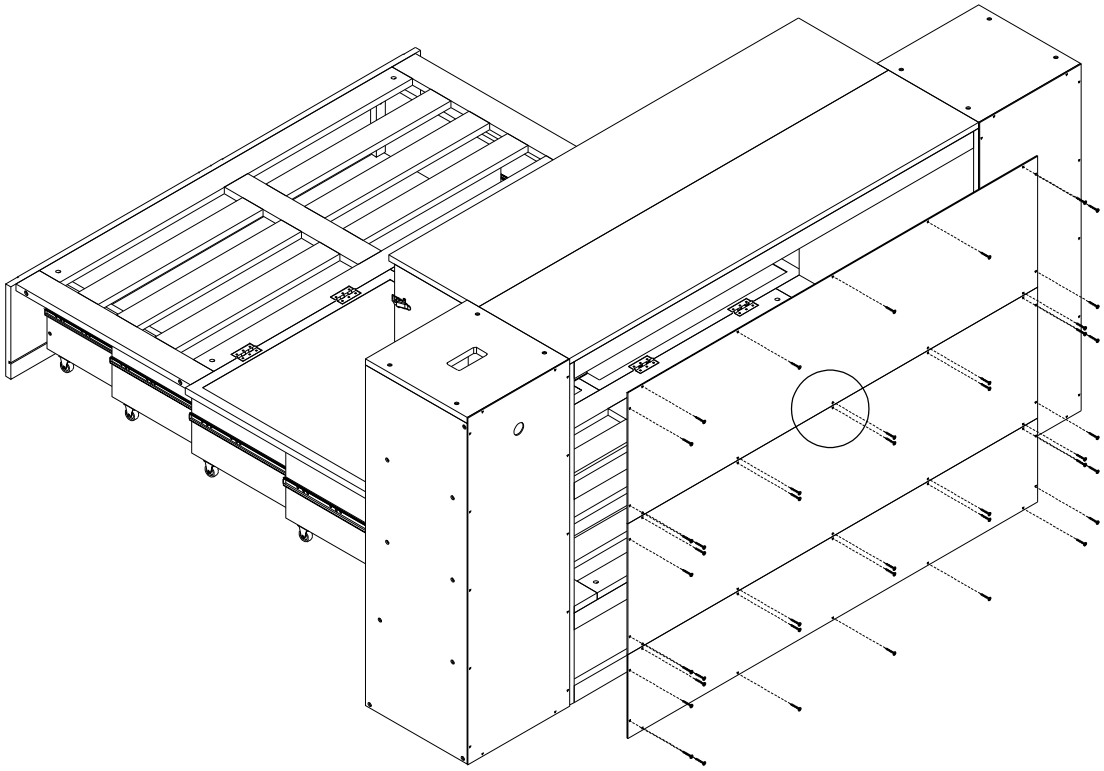

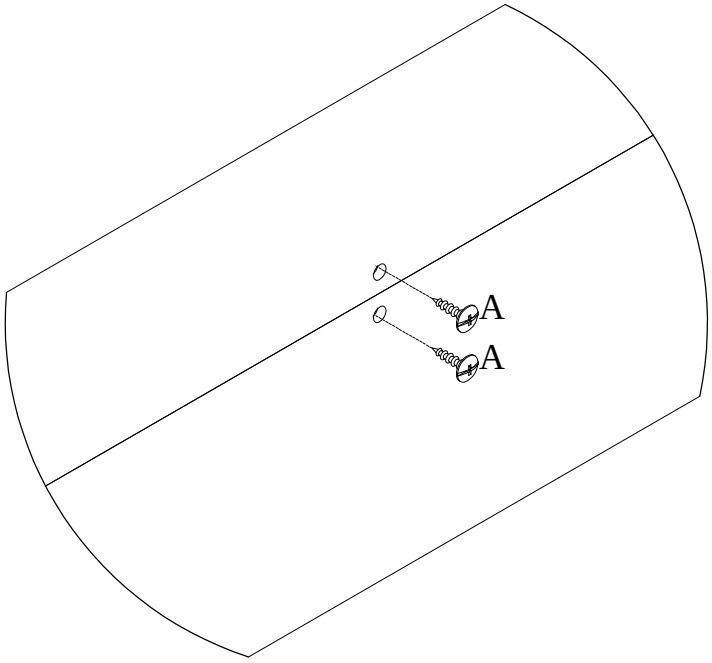

A	
44	

To keep the Murphy bed at it's minimal size, follow the steps below.

1. Fold up Support Panels (50)

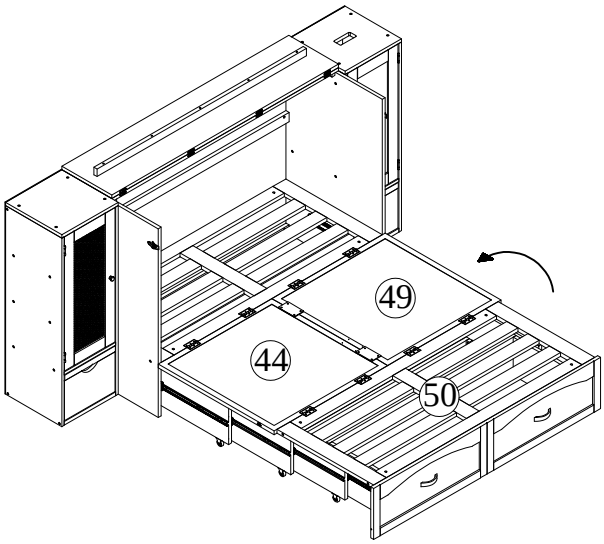

4. Push Drawer and Extension Sides in.

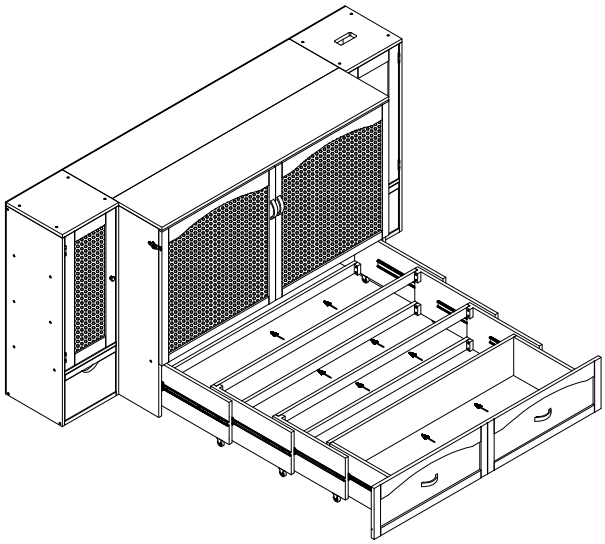

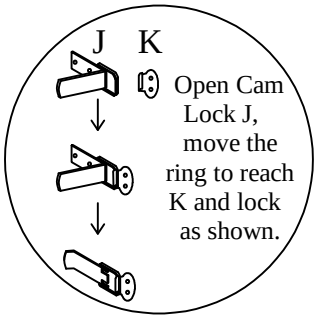

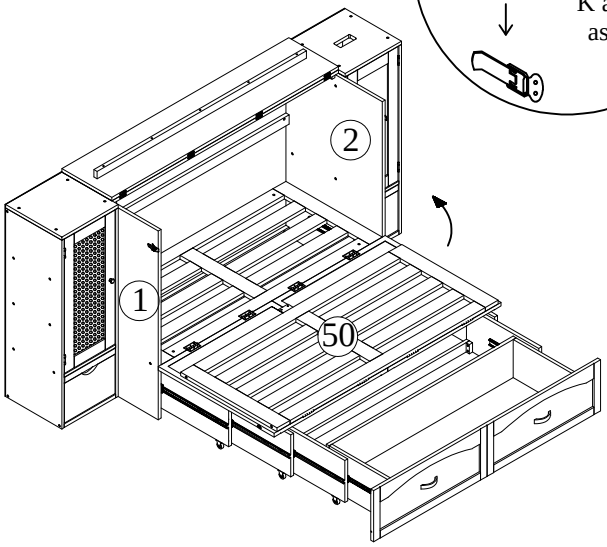

2. Fold up Doors (44,49) and support panels (50) and lock cam lock on Side Panels (1,2).

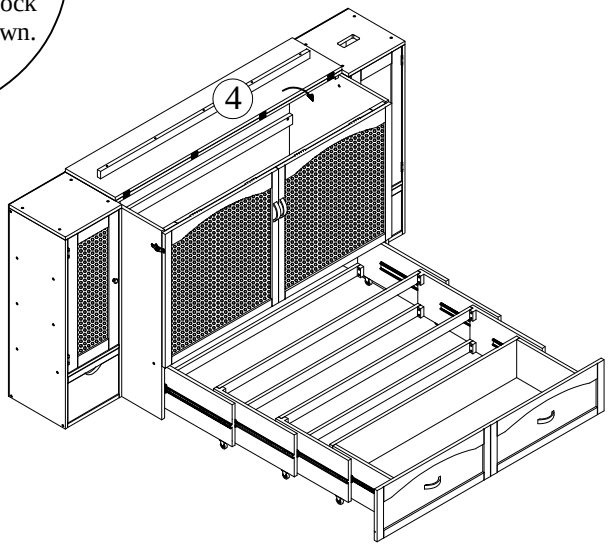

3. Fold Top Panel(4)

***To use the Murphy bed, PULL THE DRAWER OUT BEFORE PUTTING** DOORS/PANELS DOWN. Failing to do so will cause damages to the furniture.*