KINGSTON

TO ORDER PARTS, CALL: 1-877-252-7277
www.kingstonbrass.com

VTAP603222L

60" Acrylic Alcove Tub with Left Hand Drain Hole

M10 x 65 (5 pcs)

Drain Hole Size
(Scale 3:1)

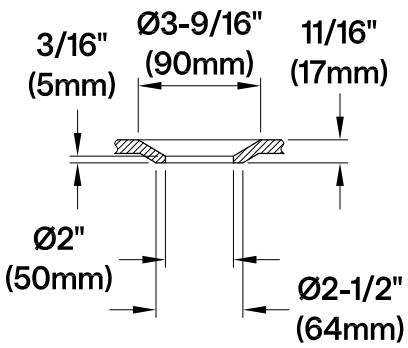

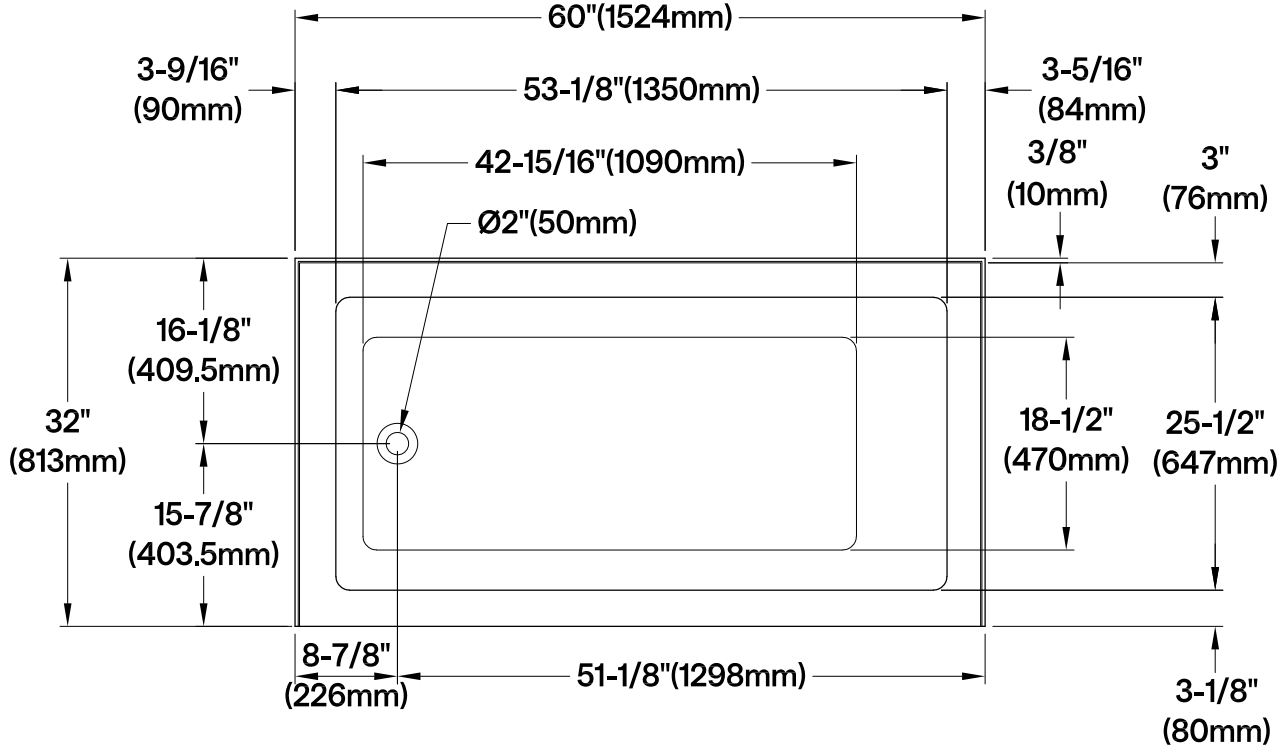

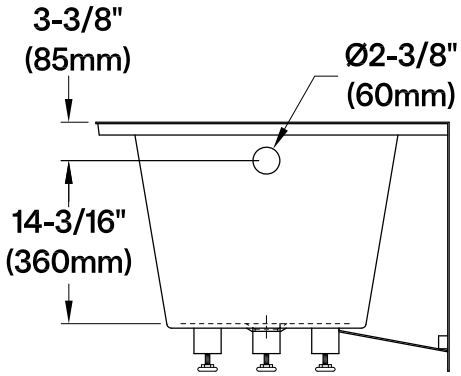

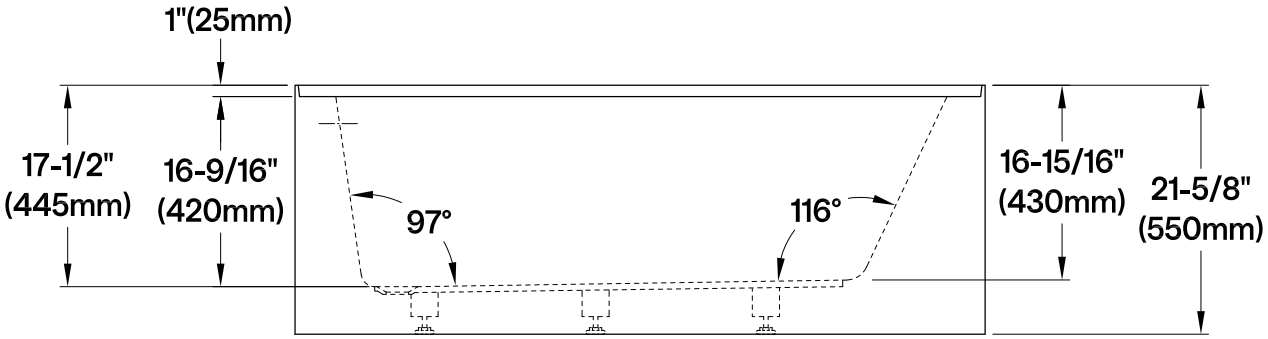

2025-10-A