ASSEMBLY INSTRUCTION

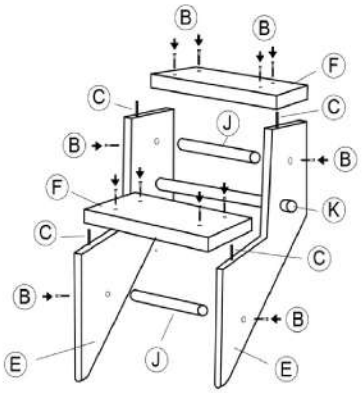

Step 1

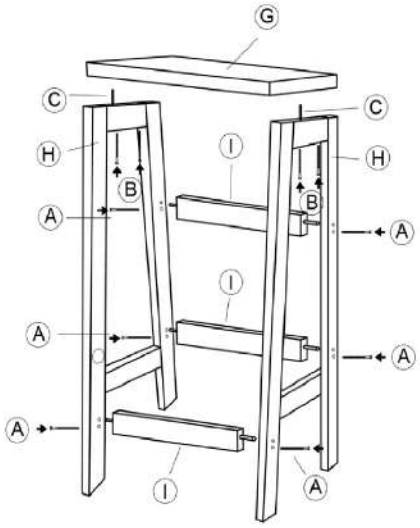

Step 2

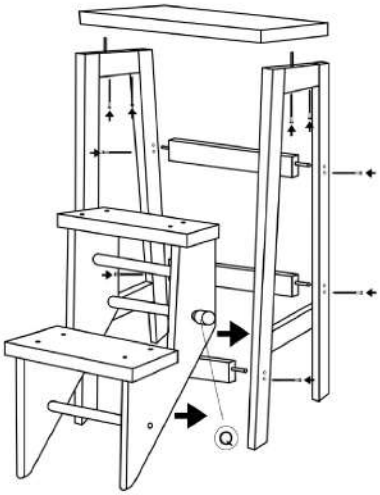
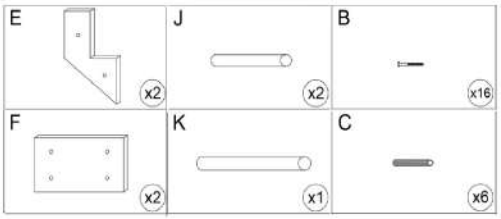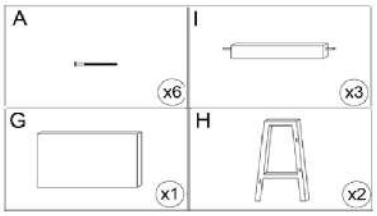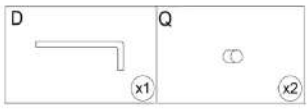
Step 3