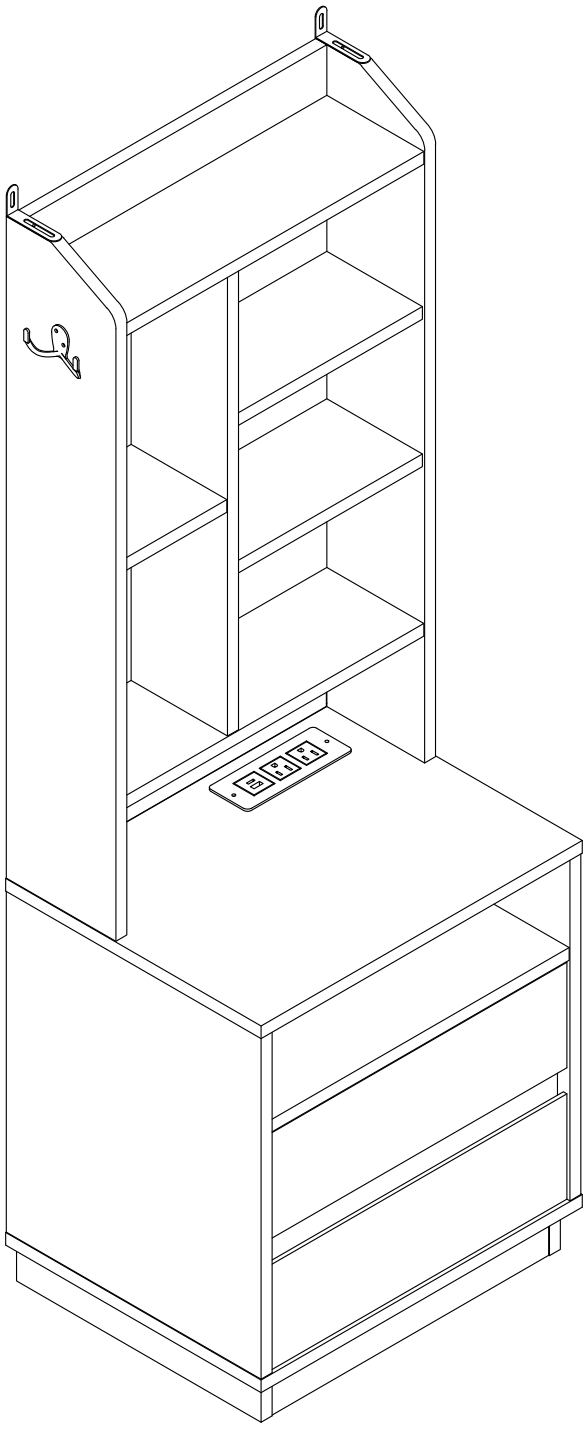

General Guidelines

- Please read the following instruction carefully and use the product accordingly.
- Please keep this manual and hand it over when you transfer the product.
- Please check that you have all the listed components and tools, before you start assembling the item.
- Assemble the item as close to its final position(in the same room) as possible.

Care and Maintanance

- The product is intended for indoor use only. The product must be assembled and used in accordance
- with the provisions of the manual.
- Avoid long-term exposure to humid environments to prevent mildew.
- Keep the product away from fire sources and high temperatures. Do not expose the product to direct sunlight.
- Do not place any hot objects on the surface of the product.

Warning ⚠

- Keep children and animals away from the work area, small parts could choke if swallowed.
- Children are not allowed to climb or stand on the product to avoid personal injury caused by the product tilting or tipping over.
- Please do not use the product if there is/are defective and/or missing part/s, as this can result in damage or injury.
- To avoid the potential dangers of suffocation, please keep all parts and packaging (film, plastic bags, foam, etc.) away from babies and children.

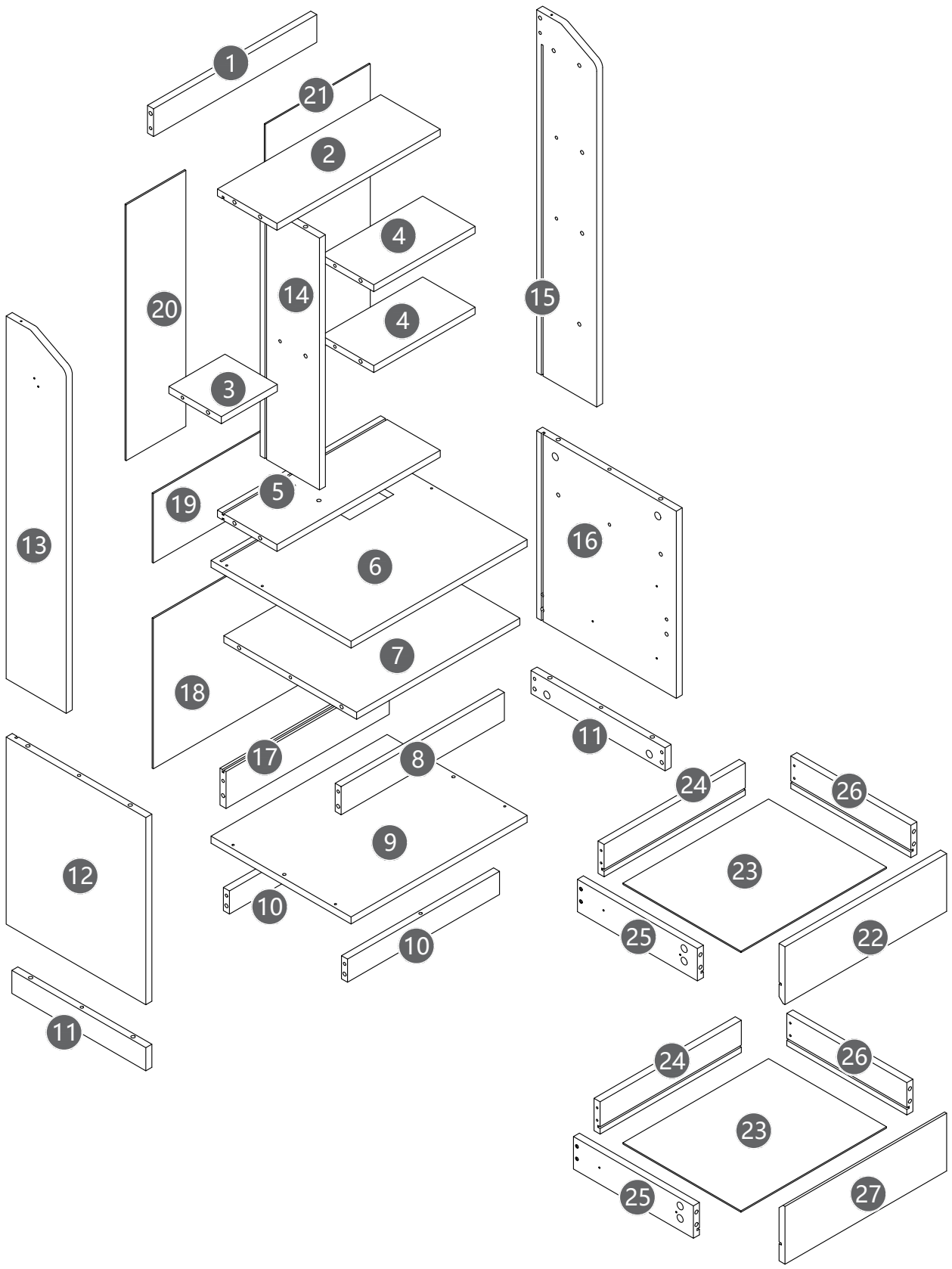
1
21
2
4
4
20
14
15
3
13
19
5
16
6
7
18
11
17
8
24
26
12
9
23
10
25
22
10
11
24
26
23
25
27

1 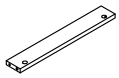 408*60(mm) 1PC	2 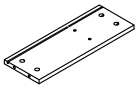 408*149(mm) 1PC	3  140*131(mm) 1PC	4  253*131(mm) 2PCS	5 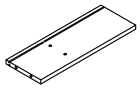 408*149(mm) 1PC
6 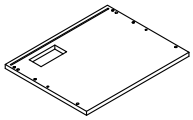 440*350(mm) 1PC	7 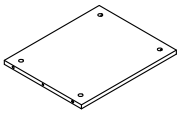 408*332(mm) 1PC	8 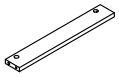 408*61(mm) 1PC	9 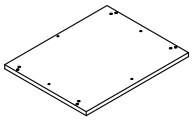 440*350(mm) 1PC	10 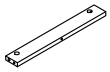 380*50(mm) 2PCS
11  335*50(mm) 2PCS	12 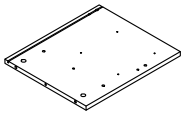 405*349(mm) 1PC	13 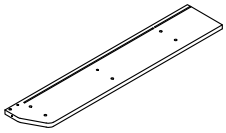 785*150(mm) 1PC	14 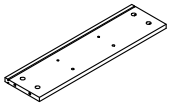 545*148(mm) 1PC	15 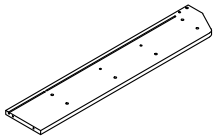 785*150(mm) 1PC
16 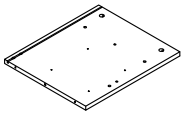 405*349(mm) 1PC	17  408*80(mm) 1PC	18 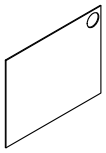 419*334(mm) 1PC	19 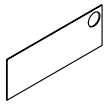 419*157(mm) 1PC	20  554*149(mm) 1PC
21 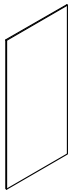 554*262(mm) 1PC	22 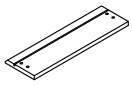 404*125(mm) 1PC	23 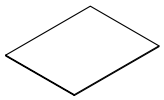 364*295(mm) 2PCS	24  353*70(mm) 2PCS	25  300*70(mm) 2PCS
26  300*70(mm) 2PCS	27 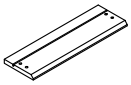 404*125(mm) 1PC			

A 48x 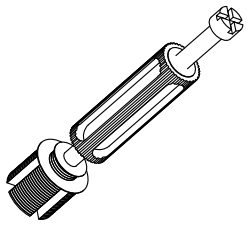	B 48x 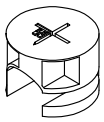 15*12	C 26x 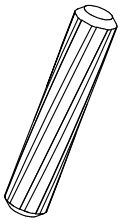 M8x40mm	D 8x 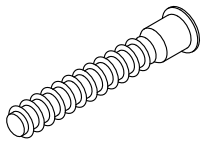 M7x50mm
E 16x 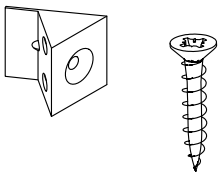	F 30x 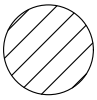	G 22x 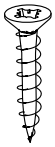 M3.5x14mm	H 8x 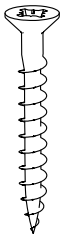 M3.5x35mm
I 2x 	J 4x 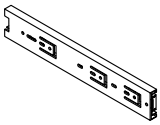 300mm	K 1x 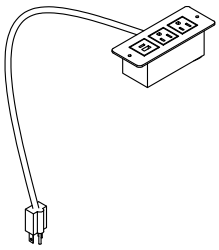	L 2x 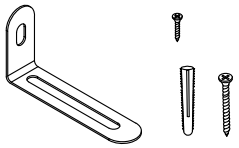
LED 1x 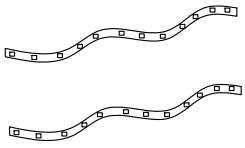			

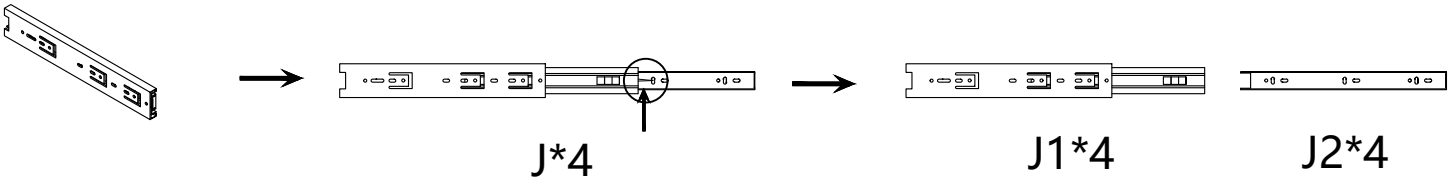

Hardware installation demonstration

NOTE:Please make sure "A"hardware tightened and can't be pulled out!

I

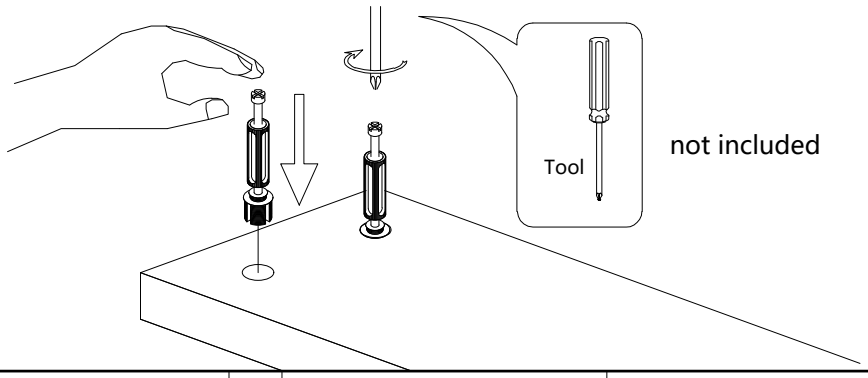

II

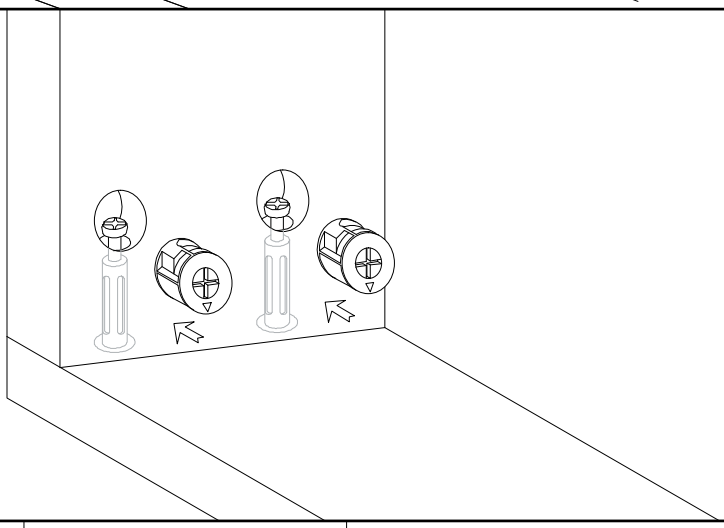

III

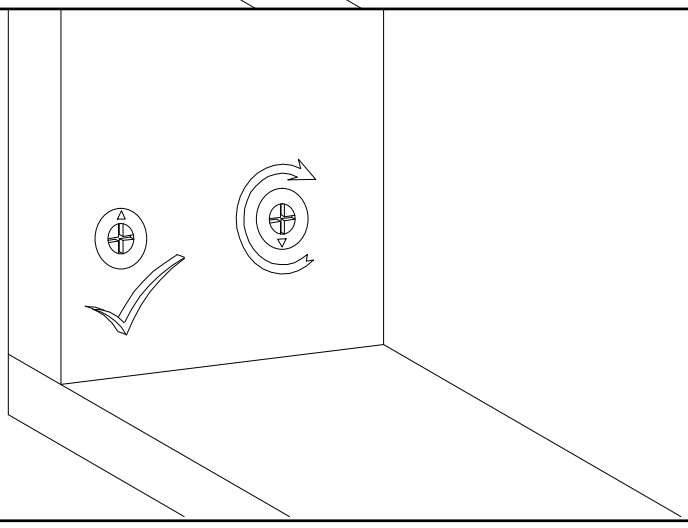

01

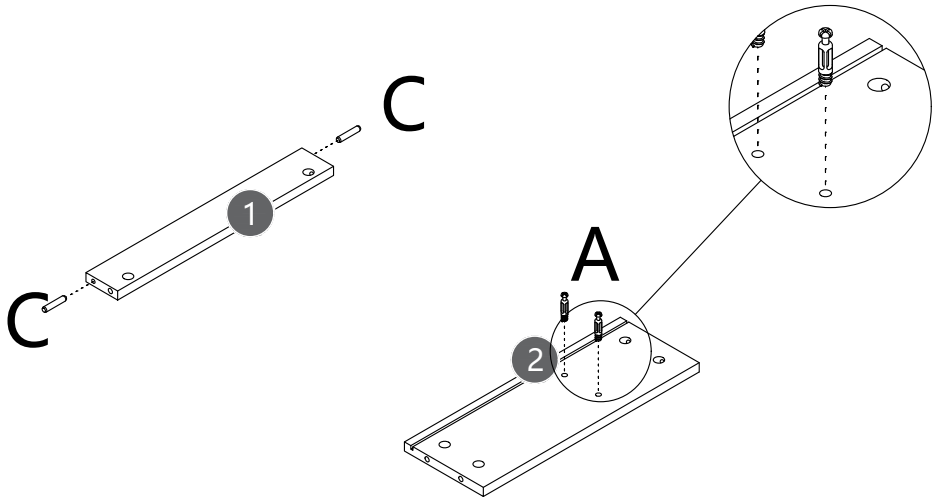

A 2x



C 2x

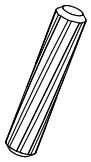

02

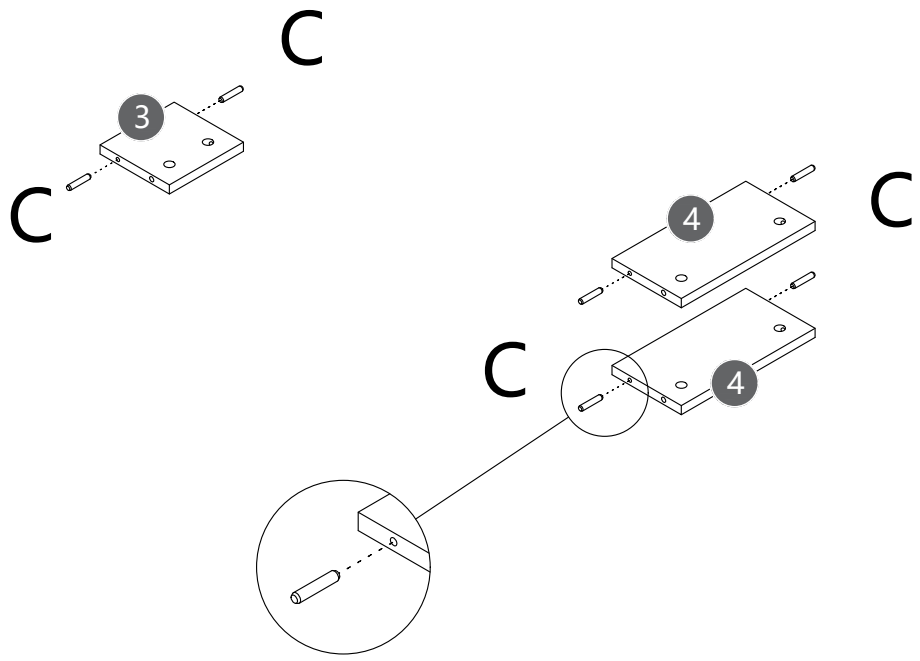

C 6x



03

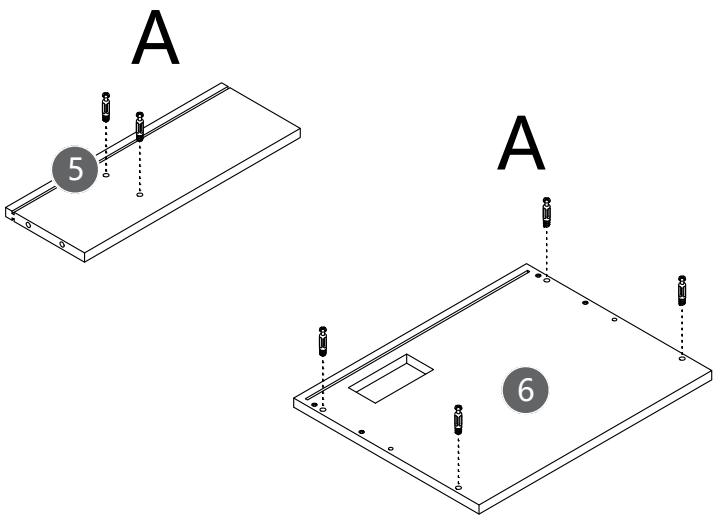

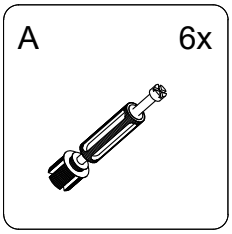

04

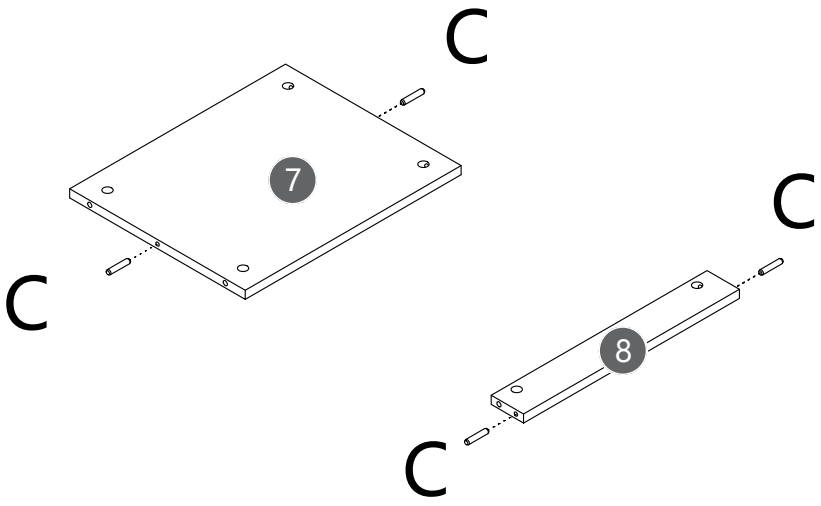

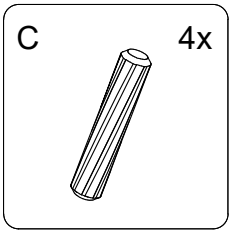

05

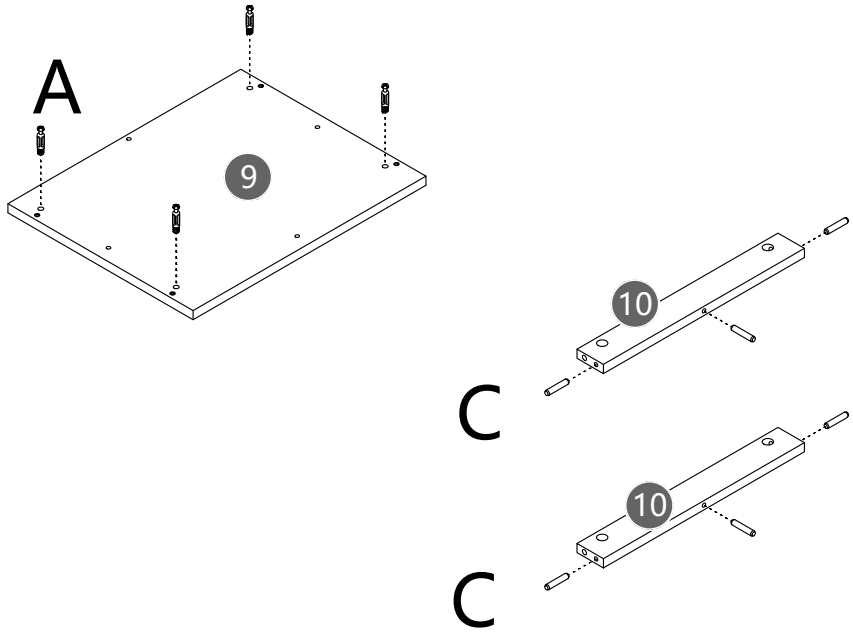

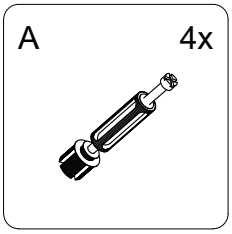

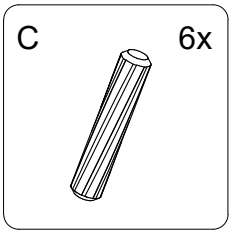

06

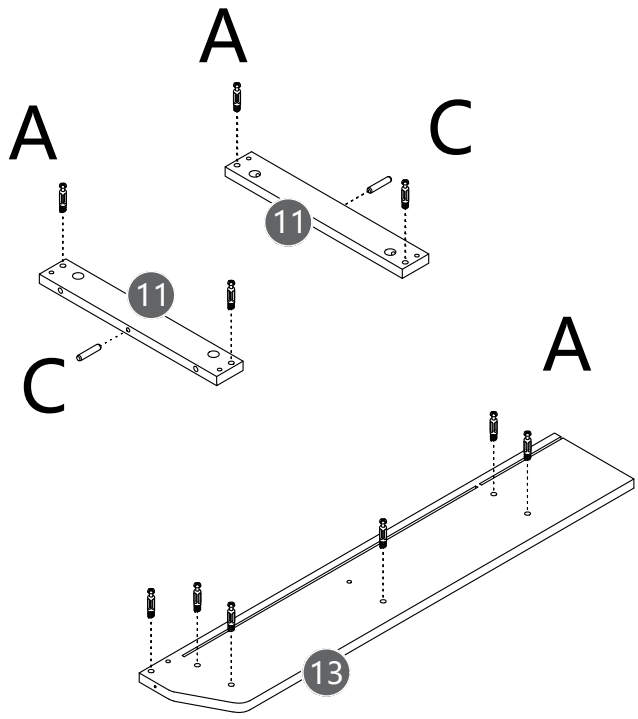

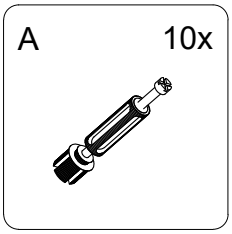

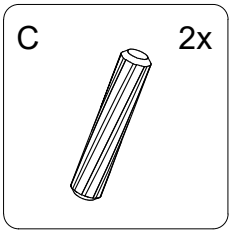

07

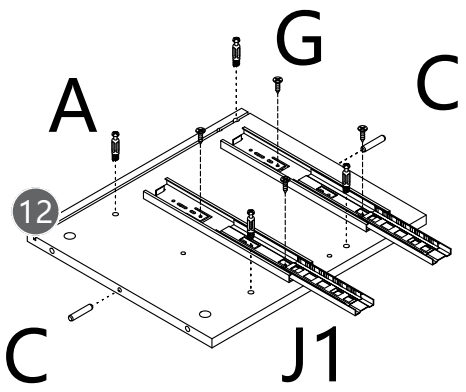

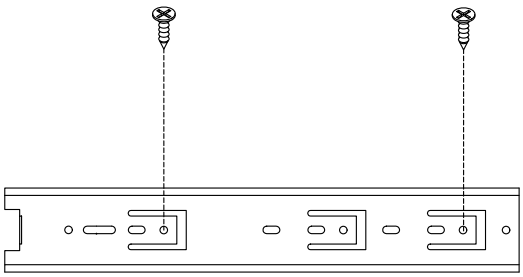

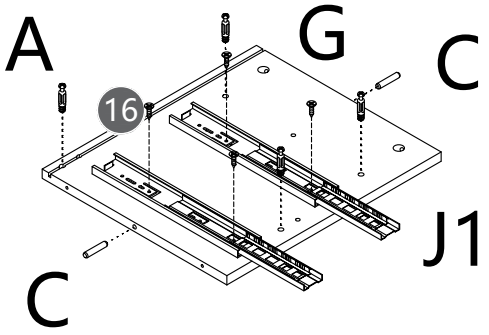

A	8x
C	4x
J1	4x
G	8x

08

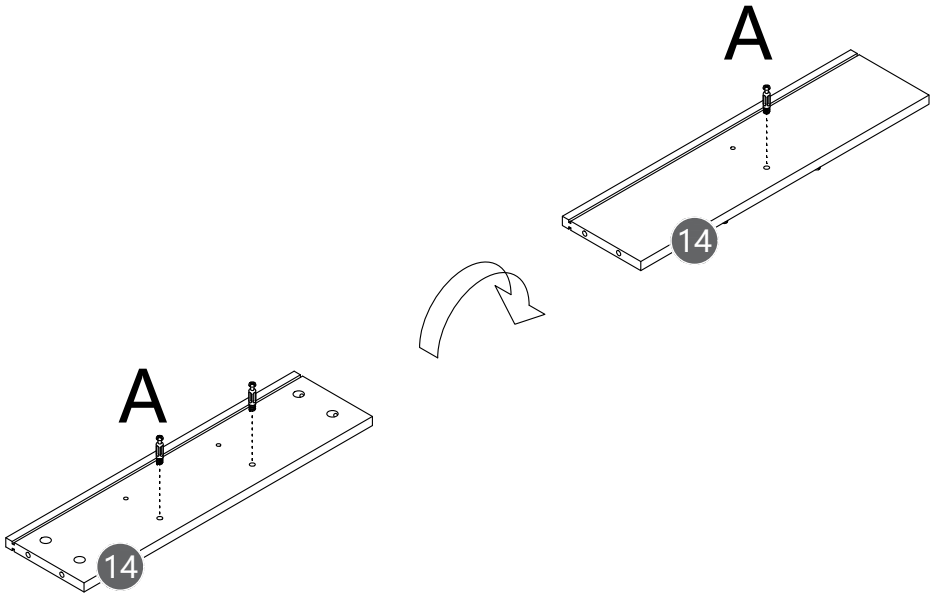

A	3x

09

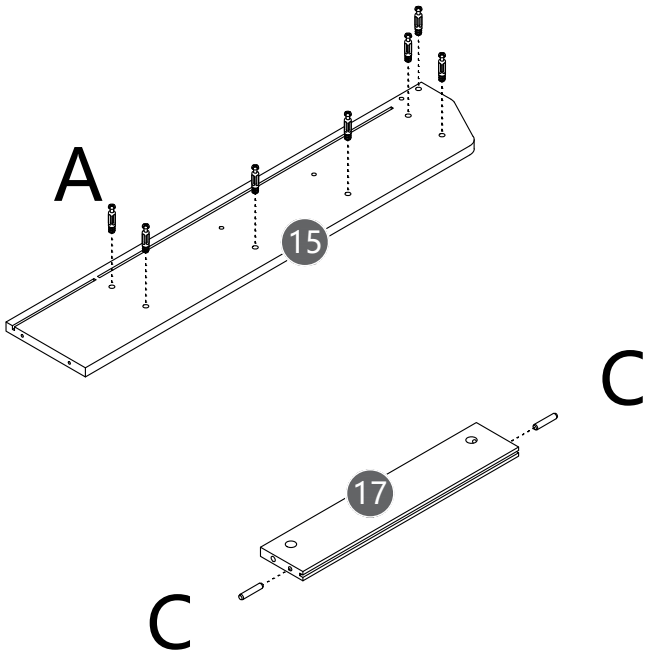

A 7x

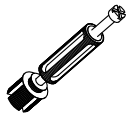

C 2x

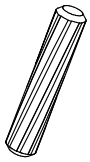

10

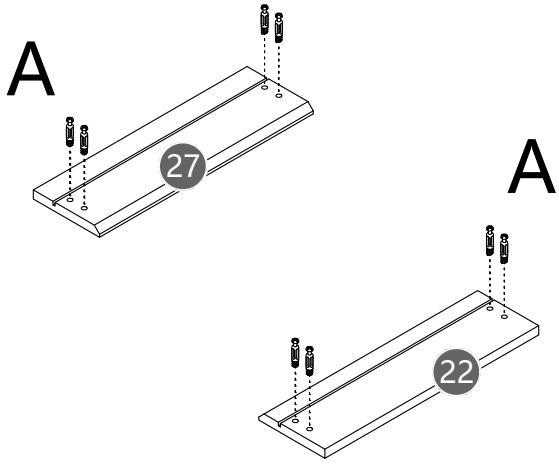

A 8x

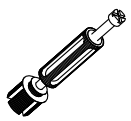

11

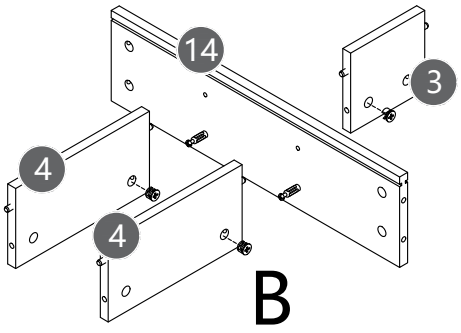

B 3x



12

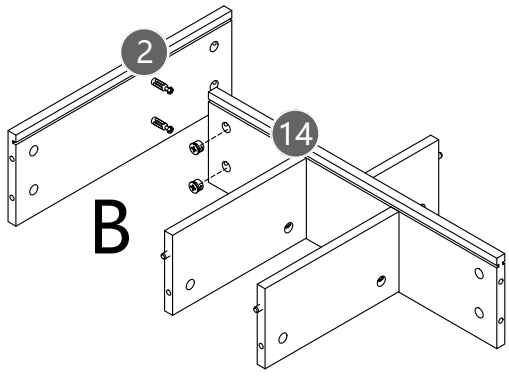

B 2x



13

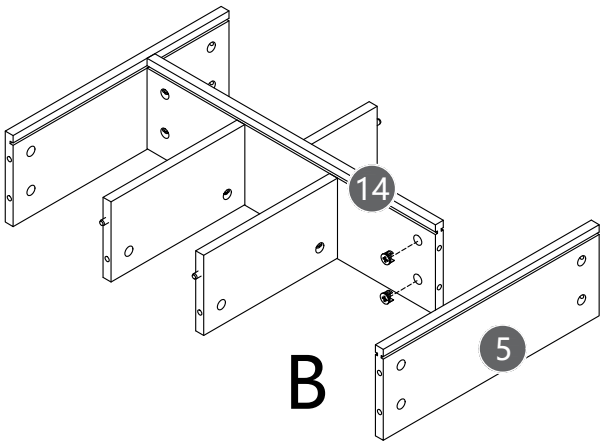

B 2x



14

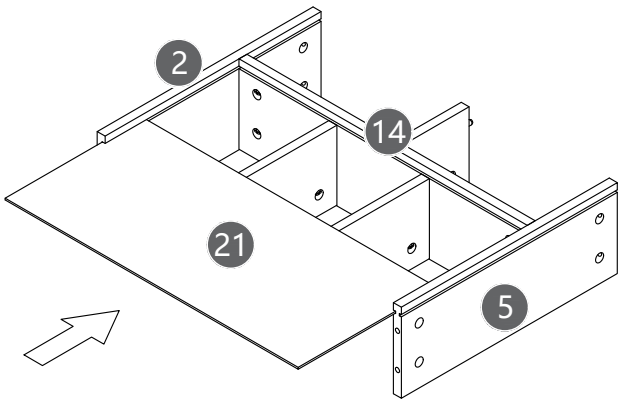

15

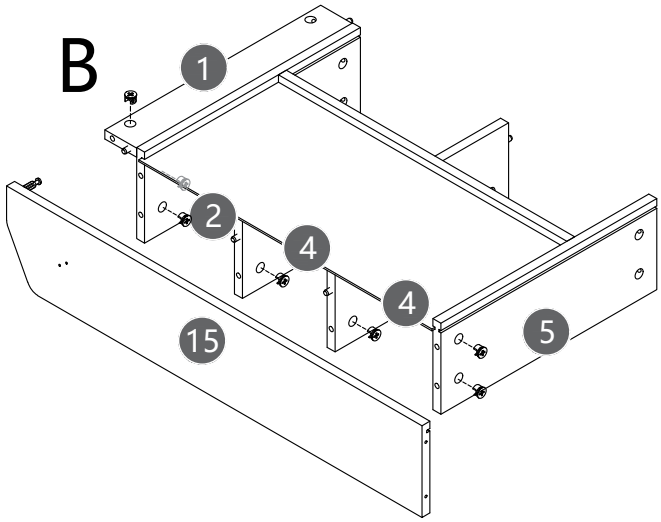

B 7x



16

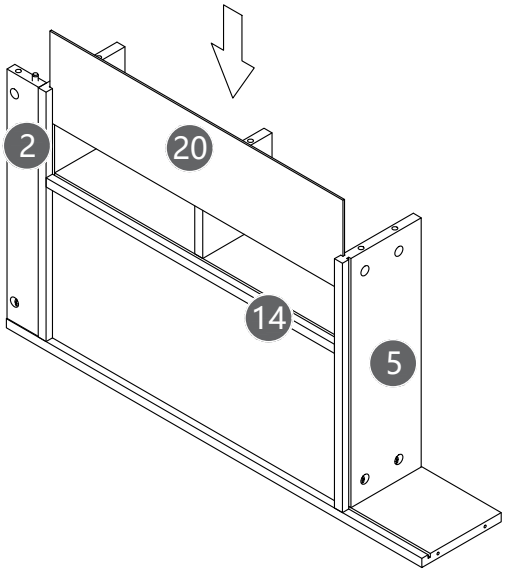

17

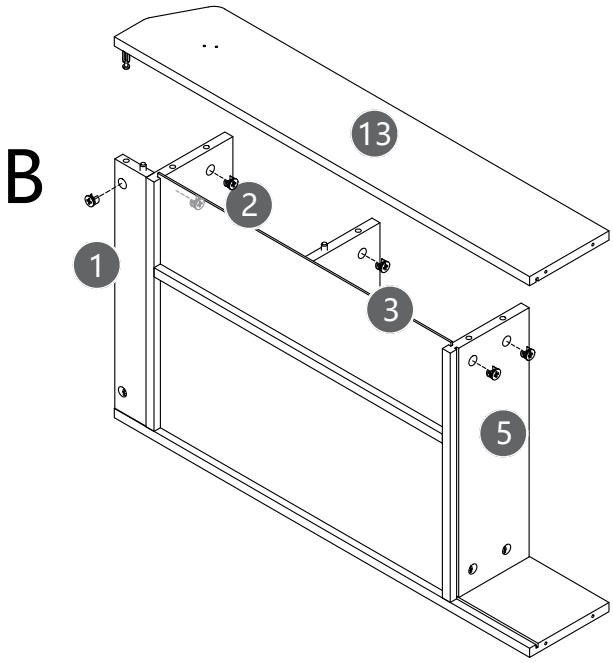

B	6x



18

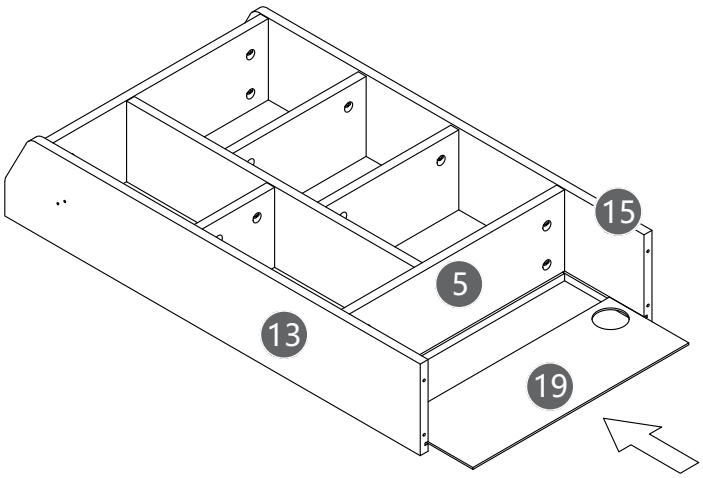

19

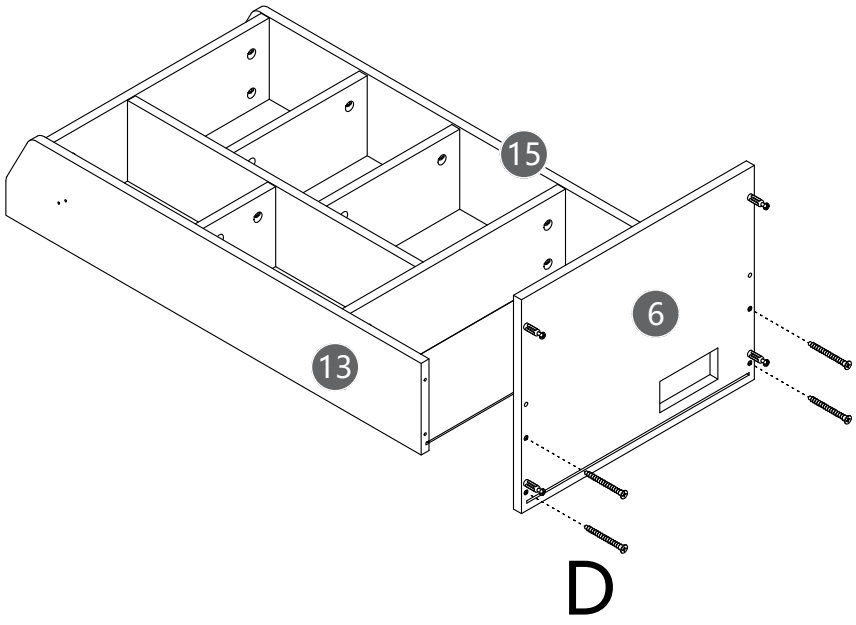

D 4x

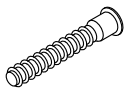

20

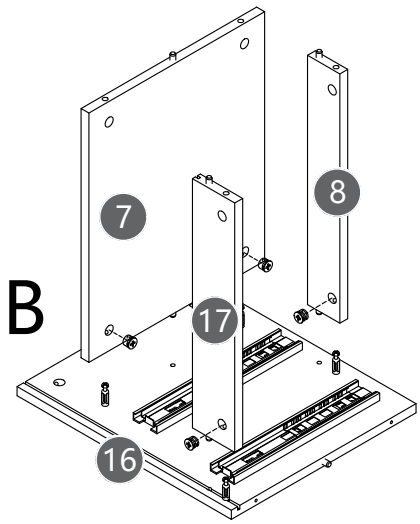

B 4x



21

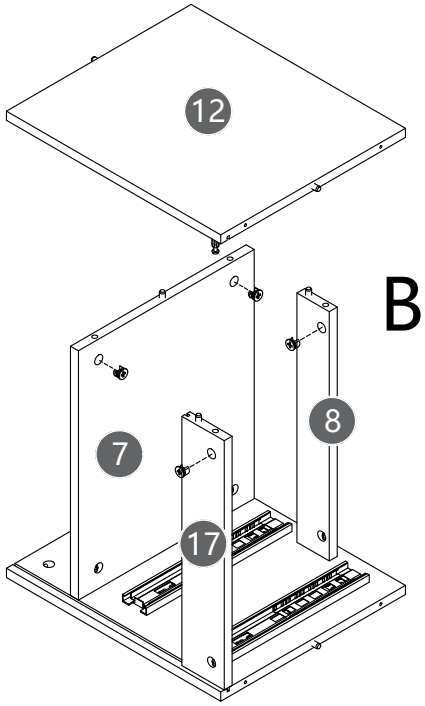

B 4x



22

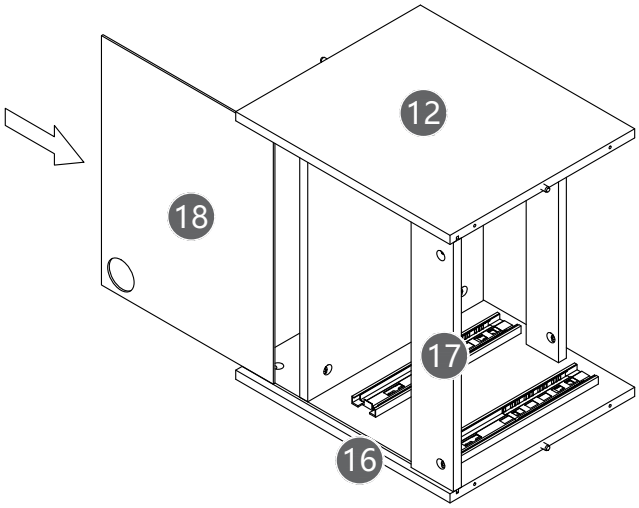

23

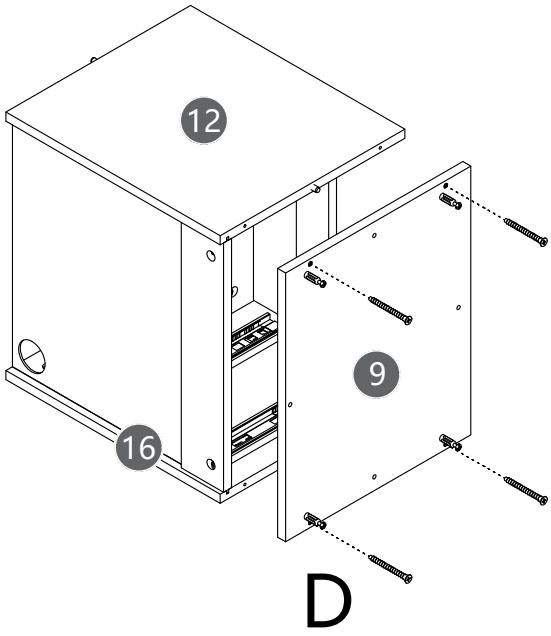

D 4x

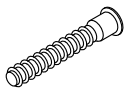

24

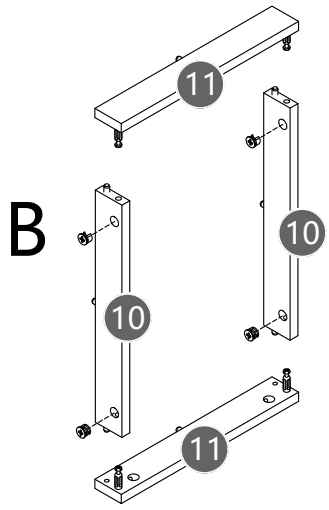

B 4x



25

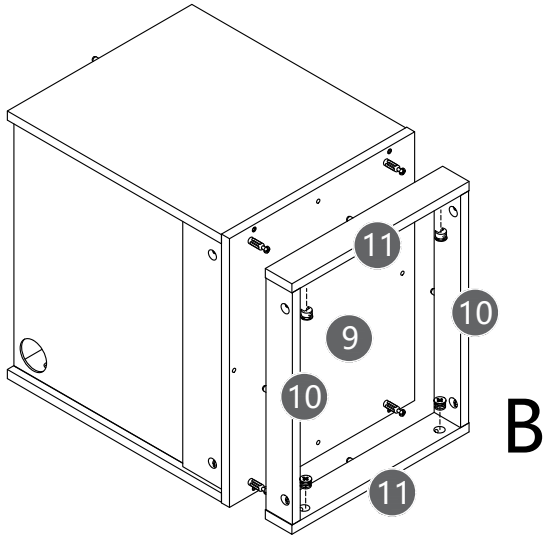

B 4x



26

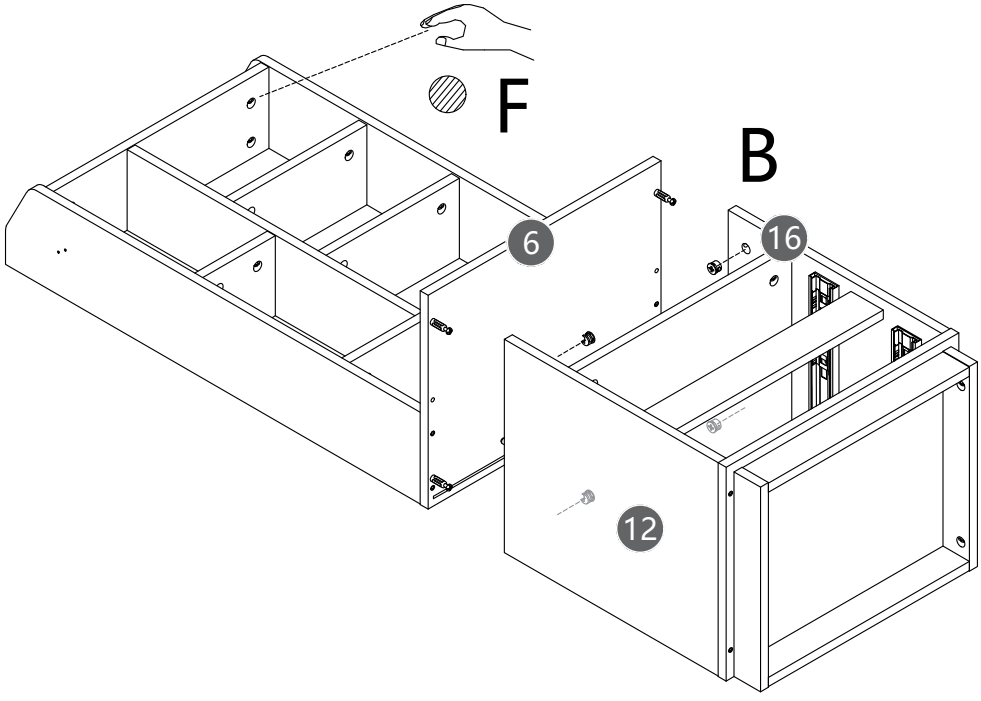

F 30x



B 4x



27

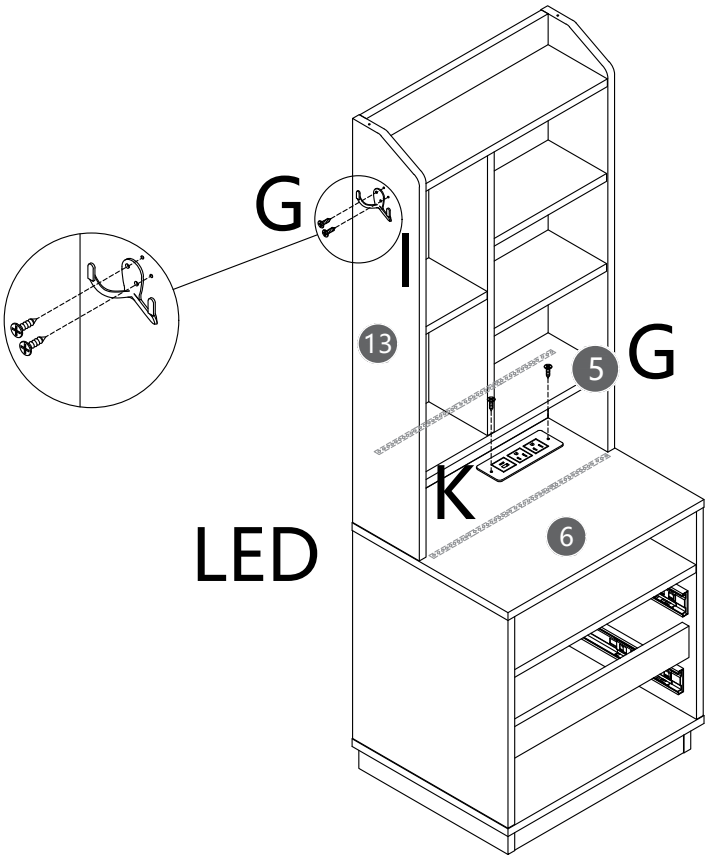

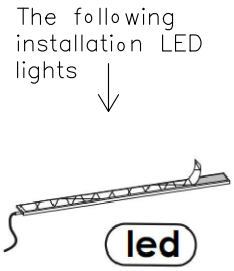

G 4x



I 1x



K 1x

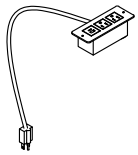

LED 1x

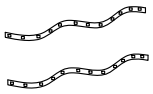

28

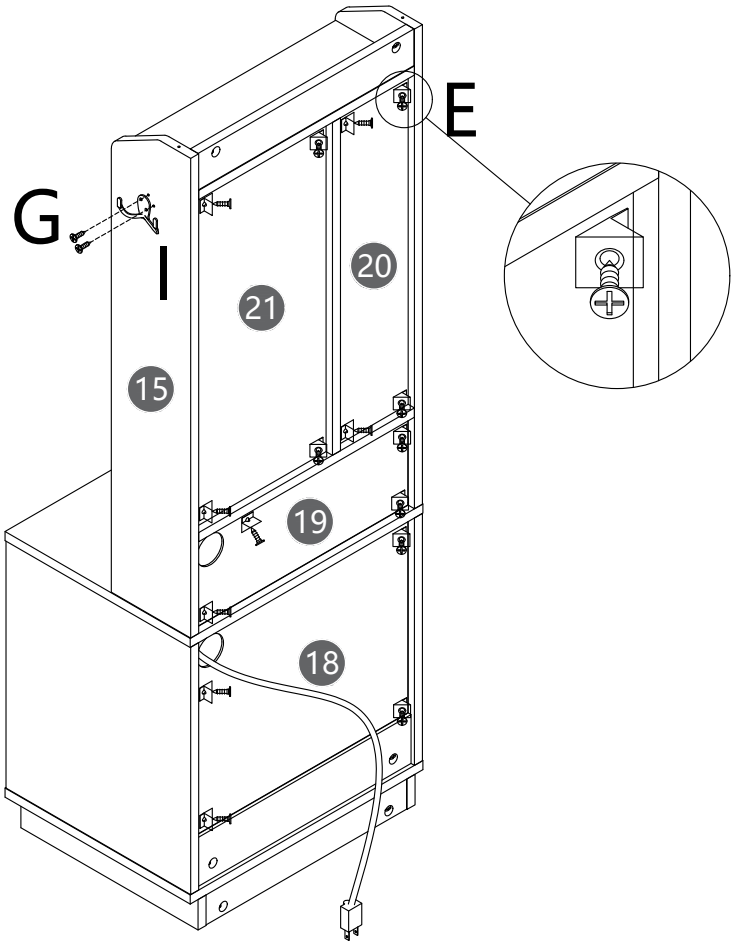

G 2x



I 1x



E 16x

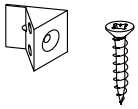

29

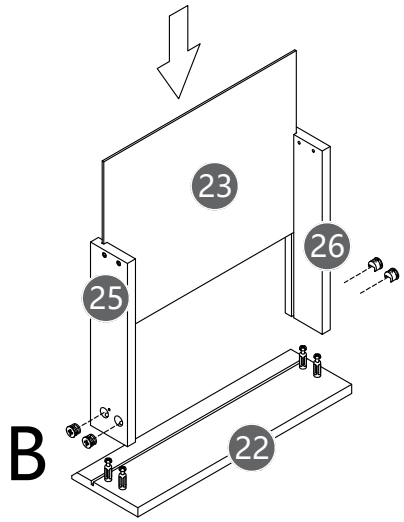

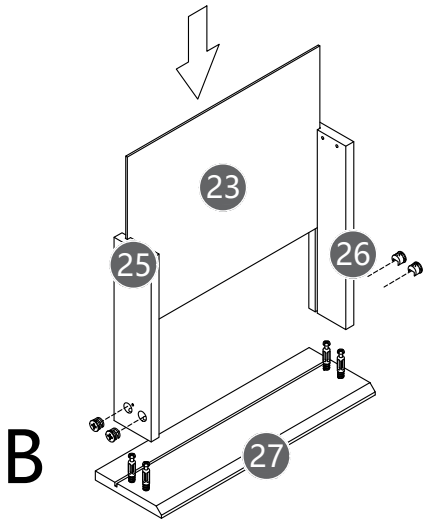

B 8x



30

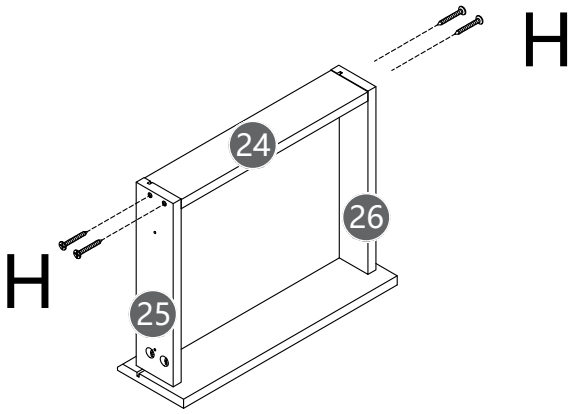

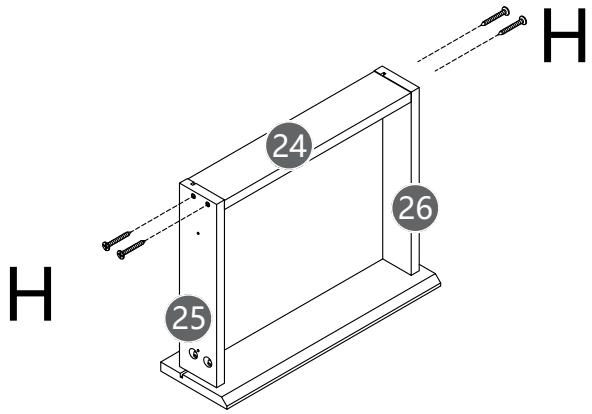

H 8x

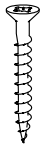

31

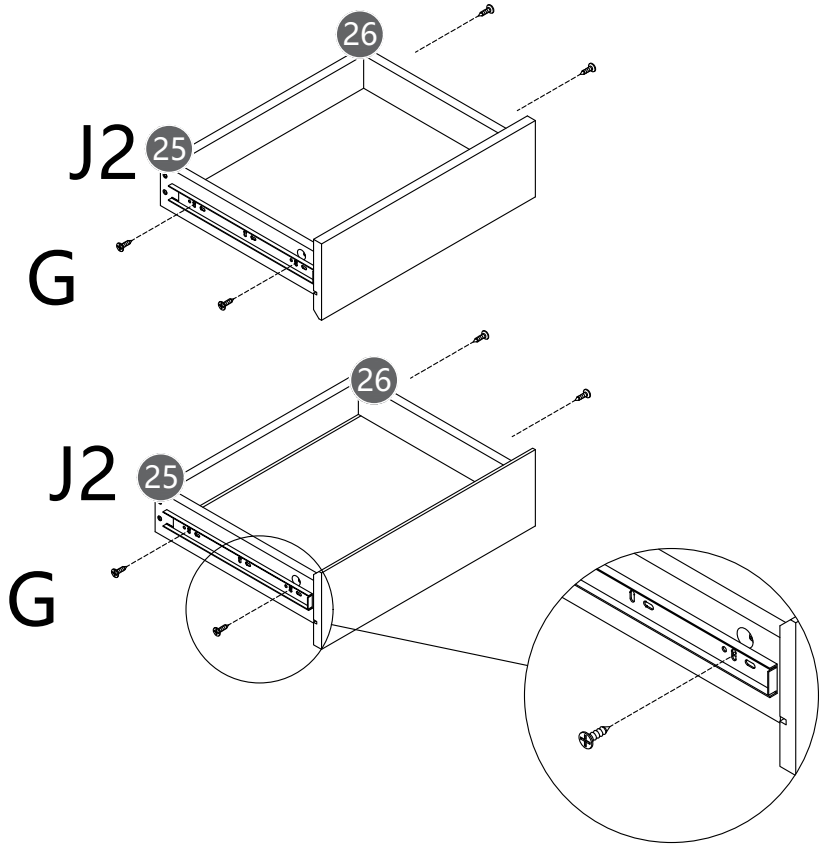

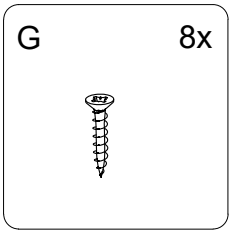

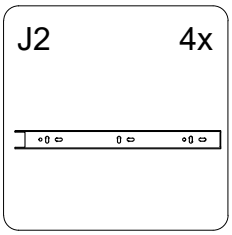

32

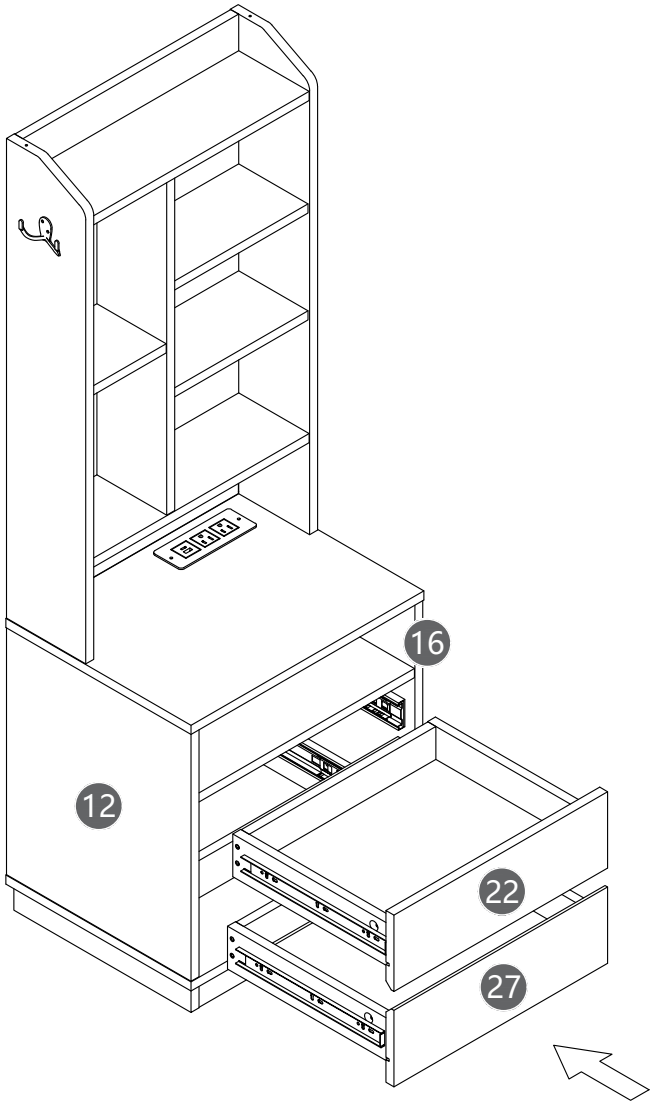

33

