Assembly Manual

Swivel Bar & Counter Stool

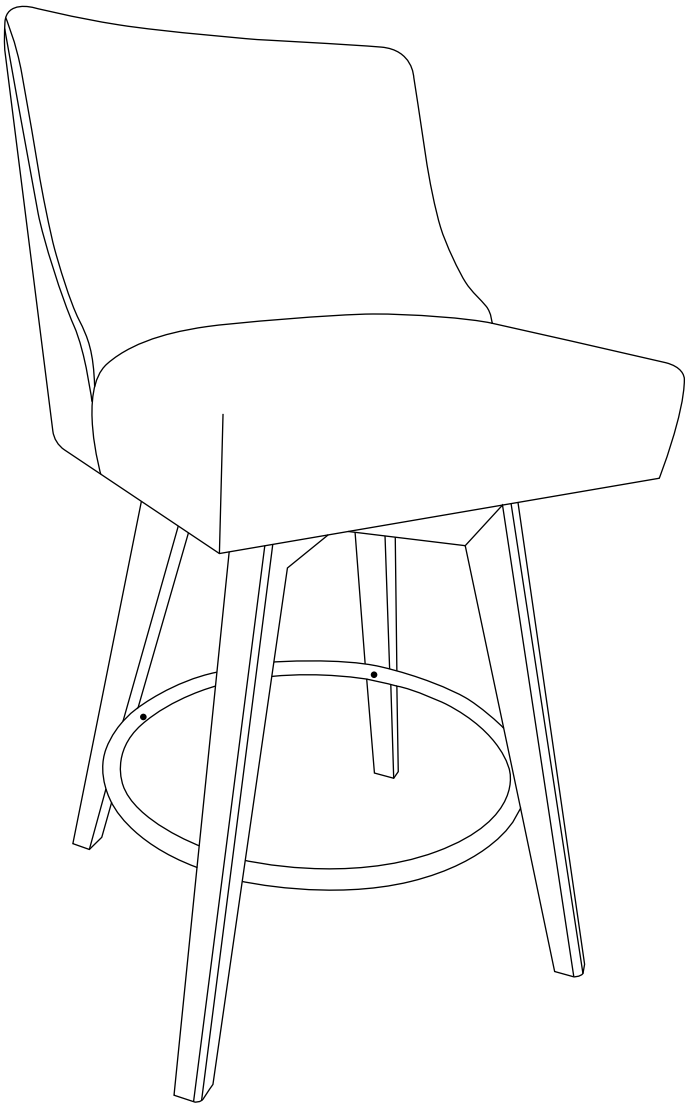

⚠ CAUTION

THIS ASSEMBLY MANUAL CONTAINS IMPORTANT SAFETY INFORMATION.
PLEASE READ AND KEEP FOR FUTURE REFERENCE

PARTS

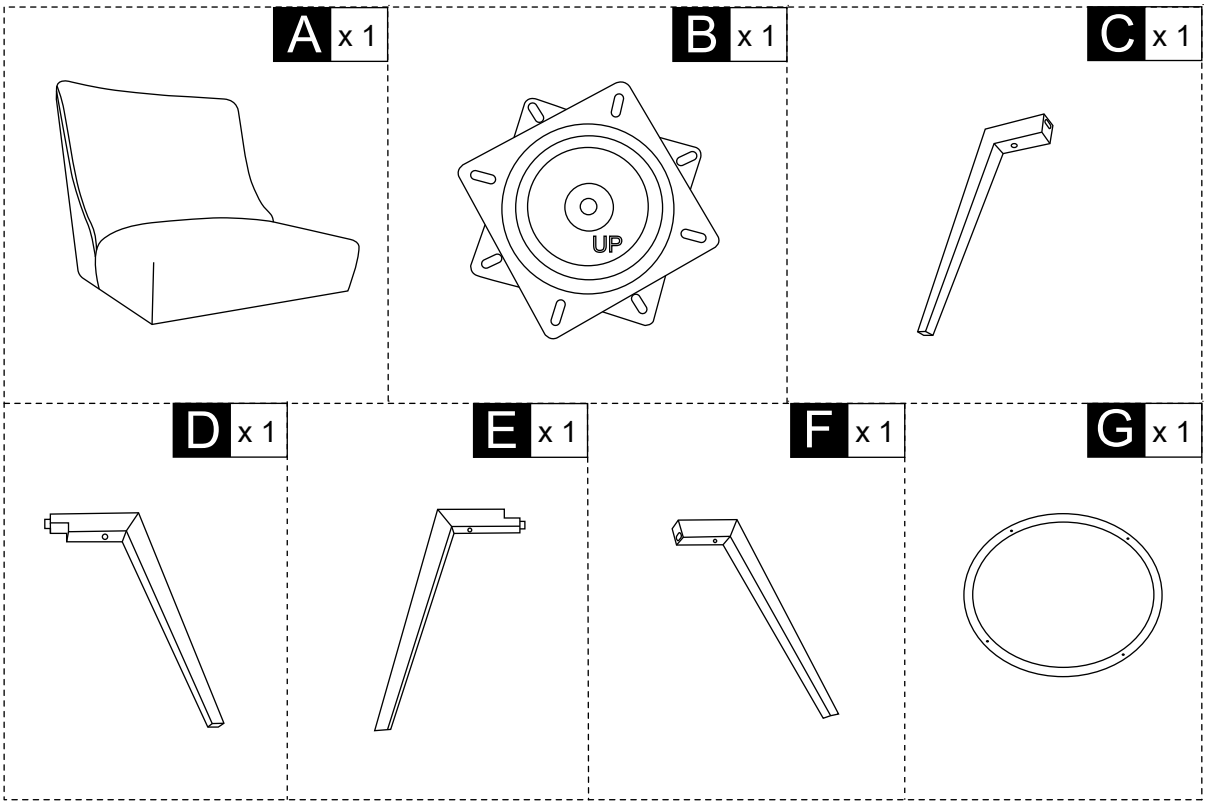

HARDWARE

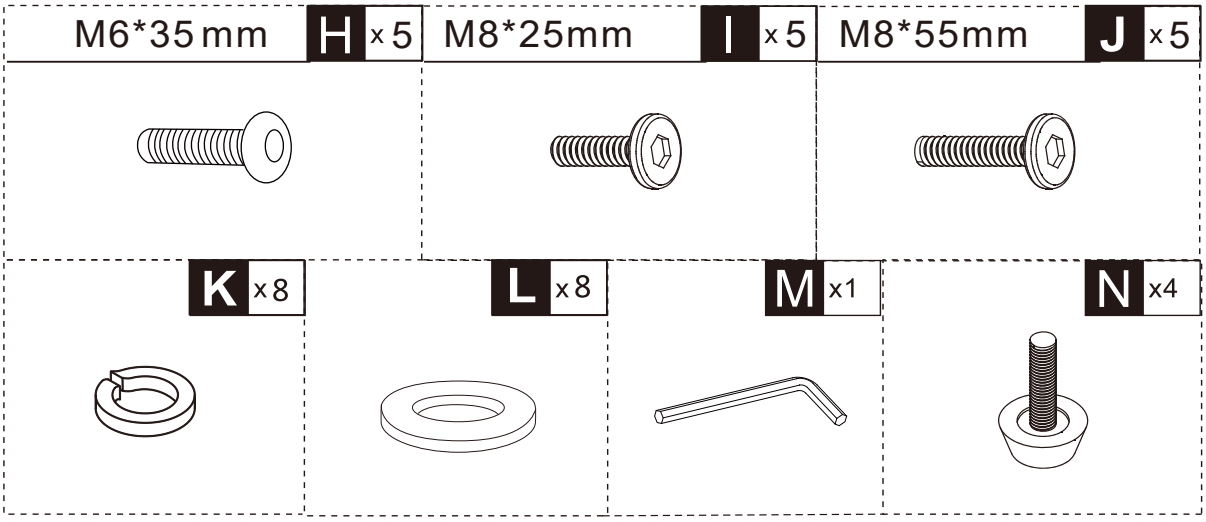

Before you begin:

1. Check if you have received all parts using the diagram on this page. Do not start the assembly process until all parts are present. If you have not received all parts or received wrong or damaged ones, please contact us and we will get back to you.
2. Do not discard any of the packaging until you are certain that you have all the necessary parts for the assembly.

01

C x 4

D x 4

E x 4

F x 4

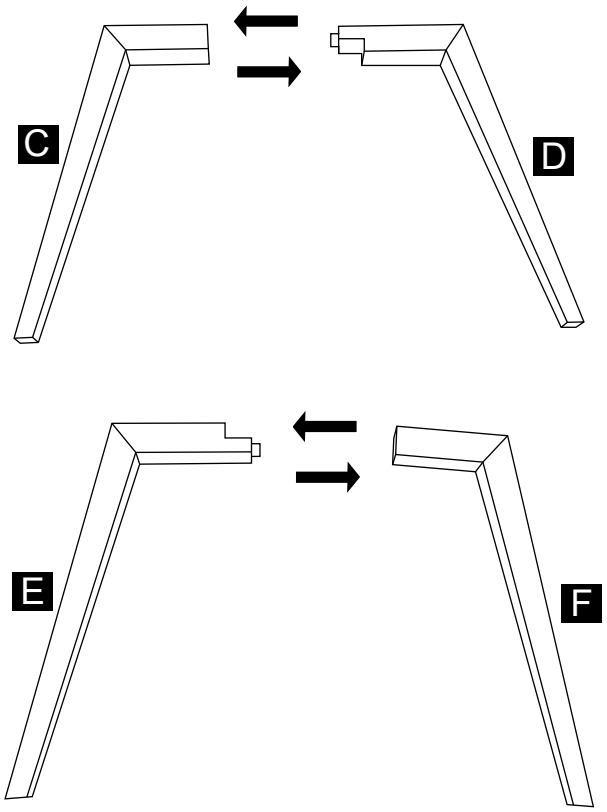

02

G x 4

H x 4

M x 1

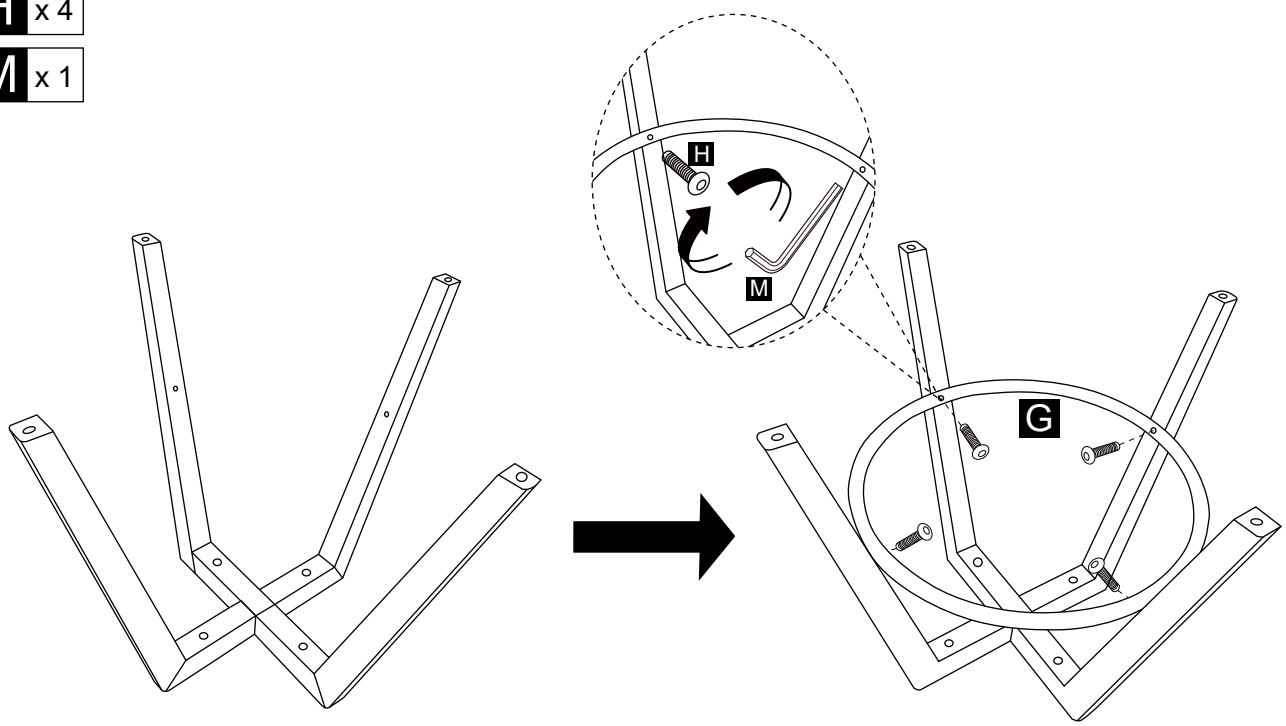

03

B	x 1
J	x 4
L	x 4
K	x 4
M	x 1

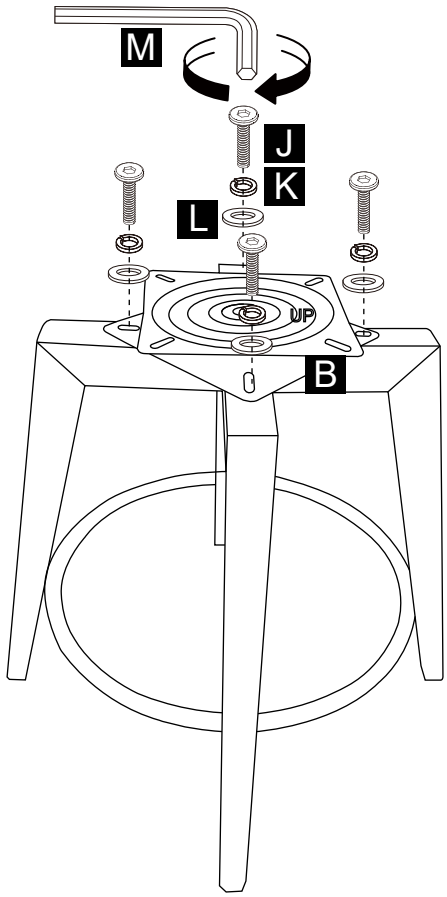

04

A	x 1
I	x 1
L	x 4
K	x 4
M	x 4

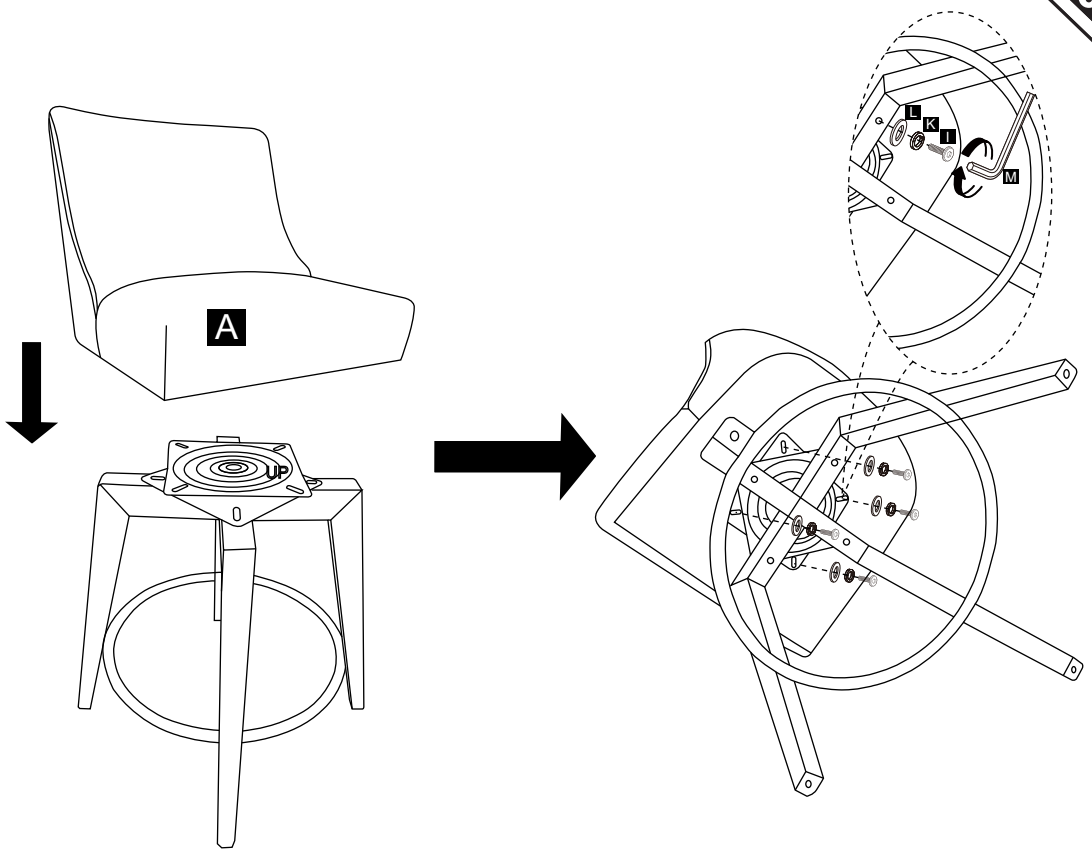

N x 4

05

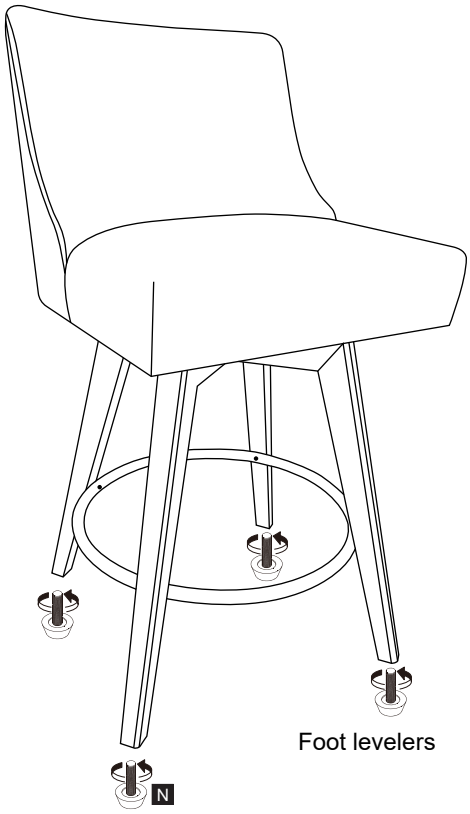

Foot levelers

Turn assembled chair upright and place on a flat surface. Push legs up or down as necessary to level. Once level, tighten all bolts and screws. Note: Each leg has an adjustable foot leveler to help level your chair.
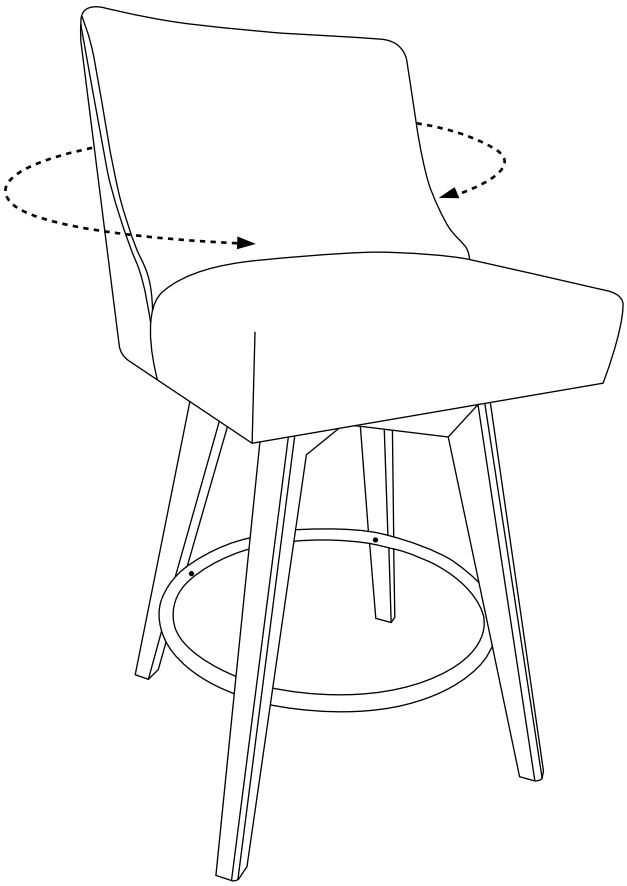
Done