Model number:
DSD-3456-234-CH

DIMENSIONS

Streamline

Measurements	
A	Distance Between Handle Holes
B	Handle Length
C	Distance Between Handle Holes To The Side
D	Distance Between Handle Holes To The Bottom
F	Min/Max Walk-in Width
G	Min/Max Shower Door Width
H	Shower Door Height
J	Walk Through Opening Height

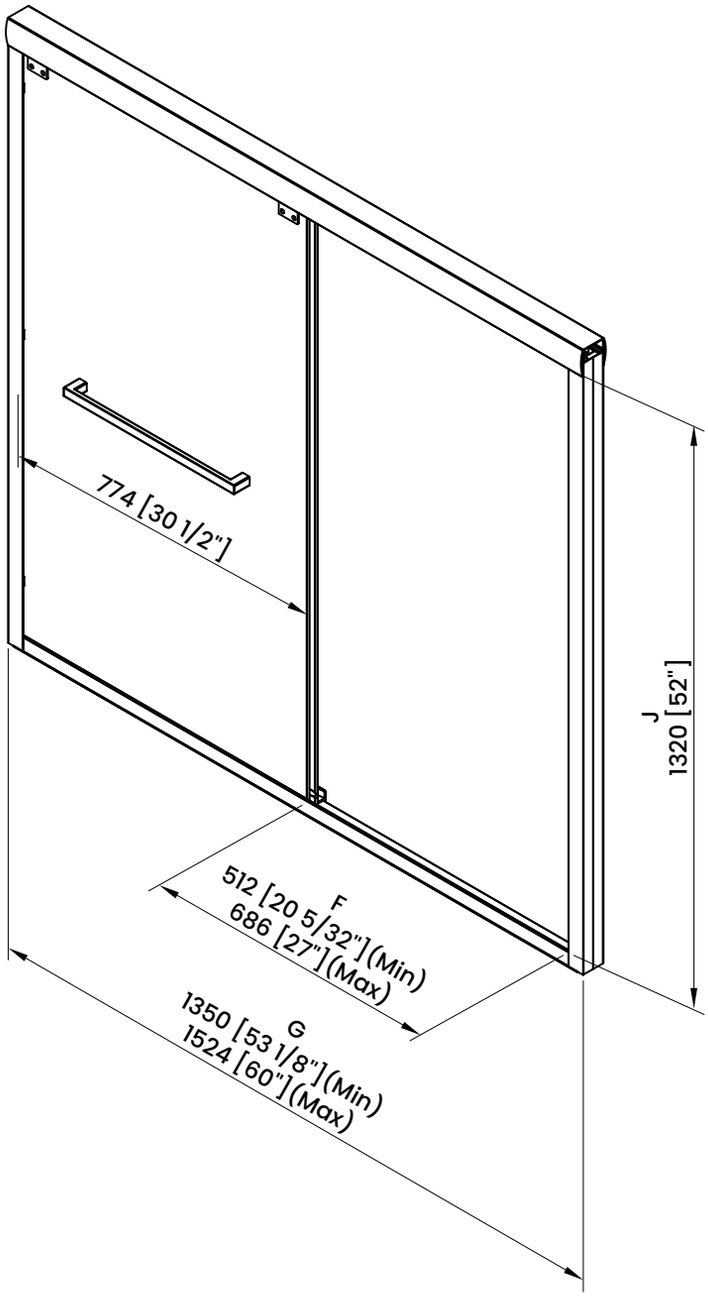

Measurements provided are in mm and inches.

Model number:
DSD-3456-234-CH

DIMENSIONS

Streamline

Measurements	
A	Distance Between Handle Holes
B	Handle Length
C	Distance Between Handle Holes To The Side
D	Distance Between Handle Holes To The Bottom
F	Min/Max Walk-in Width
G	Min/Max Shower Door Width
H	Shower Door Height
J	Walk Through Opening Height

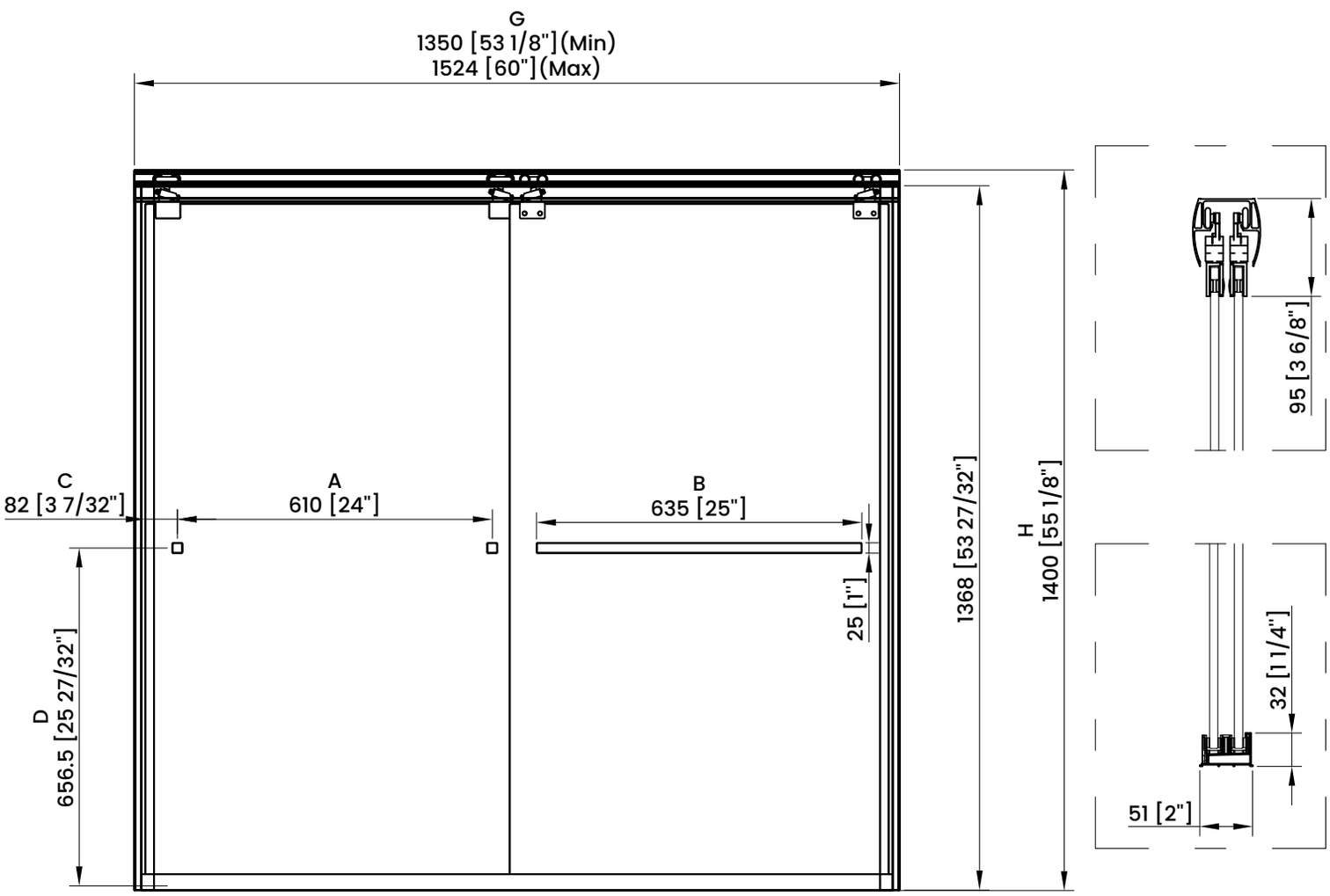

Measurements provided are in mm and inches.

Model number:
DSD-3456-234-CH

DIMENSIONS

Streamline

Measurements	
A	Distance Between Handle Holes
B	Handle Length
C	Distance Between Handle Holes To The Side
D	Distance Between Handle Holes To The Bottom
F	Min/Max Walk-in Width
G	Min/Max Shower Door Width
H	Shower Door Height
J	Walk Through Opening Height

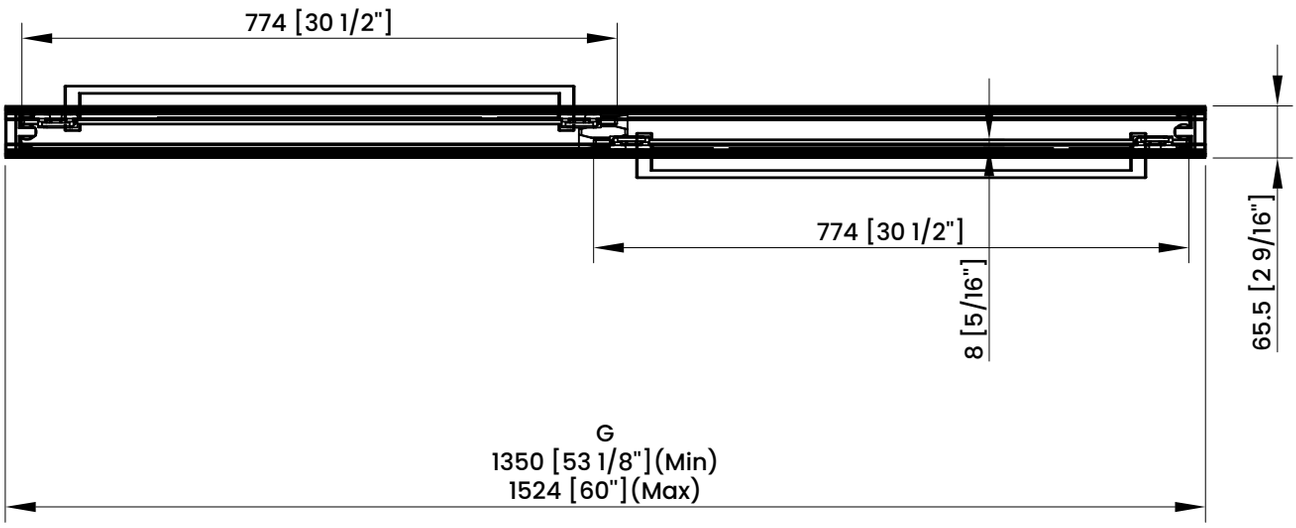

Measurements provided are in mm and inches.