MX19199-1CF-C

OPERATIONS MANUAL

4MODERN HOME

MADE IN CHINA

Assembly & Installation Instructions

Dear Customer:
Thank you for your business!
If you have any questions or problems, please send us an email to support@4modernhome.com or call us at 469-312-6428. We will do everything possible to make you completely satisfied with your purchase.
Product reviews help future customers to make their purchase decision. You are encouraged to share your experience by leaving a short product review on the platform where you bought this product.
Thank you!
4ModernHome

Warning: If any special control devices are used with this fixture, follow the instructions carefully to assure full compliance with N.E.C.requirements. If there are any questions, contact a qualified electric contractor.

Warning: California Residents Proposition 65 This product contains lead, a chemical known to the state of California to cause cancer and birth defects or other reproductive harm. Do not place the product in your mouth. Wash your hands after handling this product.

Caution: It is highly recommended to get an electrician to install this light. Please make sure to turn the electricity off at the main circuit breaker before beginning installation. All glass is fragile.Use care when handling glass component(s)and/or lamp(s).

Step2

2A. Lock the crossbar to the junction box of the ceiling by using 2 pcs of 5/32 screws in the accessories bag.
2B. Connect the wires. The hot/positive (+) wire is the one which has writing on it. The negative (-) wire is the one which has no writing.
2C. Cover the celing canopy and attach the screws to the canopy.

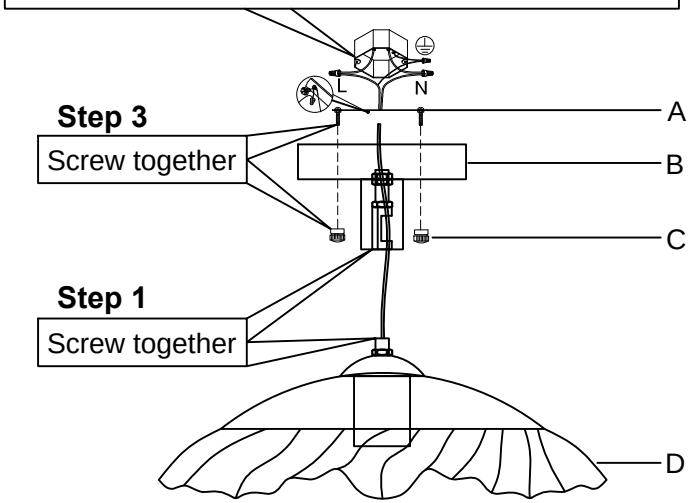

Step 3
Screw together

Step 1
Screw together

Step4
Install 1 E26 Light bulbs (Not included).

Light Bulb
(Not included)

E26

(Rated 110-130V/60Hz, bulb 60W maximum.)

WIRE CONNECTION DIAGRAM

Wires meeting safety standards are required to connect the electrical circuit.

CAUTION: Risk of fire

Please read all instructions carefully. Before you proceed to install, make sure that the power supply is turned off and remains off until installation is completed.

PARTS INCLUDED

Code	Part Description	QTY
A	Mounting Bracket	1 PCS
B	Canopy	1 PCS
C	Cover Nut	2 PCS
D	Glass Lampshade	1 PCS