Metal Garden Shed

OWNER'S MANUAL /

Instructions for Assembly

Size 11 ' x 13'

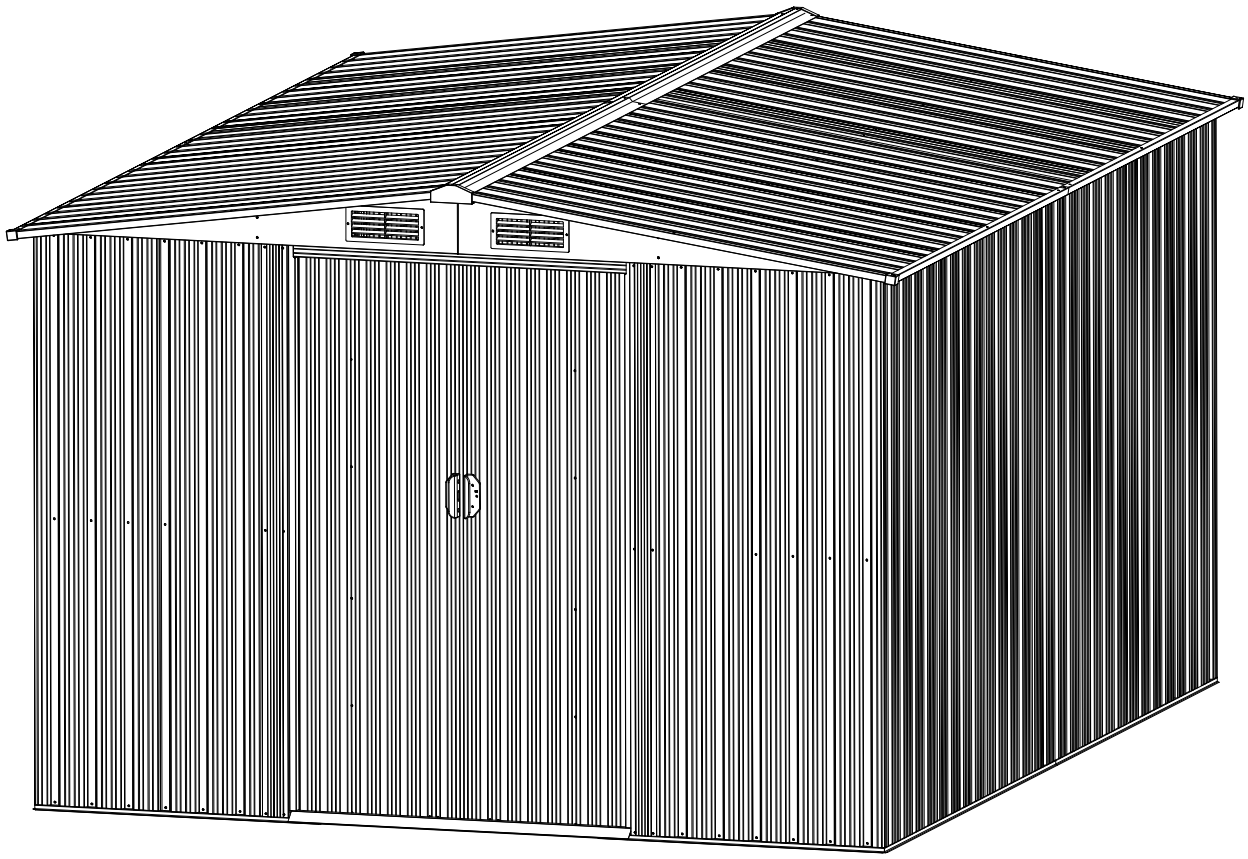

WARNING

Please read the instruction manual carefully before assembly

Please assembly strictly in accordance with the instruction

Please double-check to ensure that all parts of the package contents intact

To avoid injury , work gloves are recommended during assembly

BEFORE YOU BEGIN

Owner's Manual
Before beginning construction, check local building codes regarding footings, location and other requirements. Study and understand this owner's manual. Important information and helpful tips will make your construction easier and more enjoyable.
Assembly Instructions: Instructions are supplied in this manual and contain all appropriate information for your building model. Review all instructions before you begin, and during assembly, follow the step sequence carefully for correct results.
Parts and Parts List: Check to be sure that you have all the necessary parts, you're your building.
Separate contents of the carton by the part number while reviewing parts list.
The first few steps show how to join related parts to make larger sub assemblies which will be used later.
Familiarize yourself with the hardware and fasteners for easier use during construction.
These are packaged within the carton. Note that extra fasteners have been supplied for your convenience.

PLAN AHEAD

Watch the Weather: Be sure the day you select to install your building is dry and calm. Do not attempt to assemble your building on a windy day. Be careful on wet or muddy ground.
Teamwork: Whenever possible, two or more people should work together to assemble your building. One person can position parts or panels while the other is able to handle the fasteners and the tools.
Tools and Materials: These are some basic tools and materials you will need for the construction of your building. Decide which method of anchoring and the type of foundation you wish to use in order to form a complete list of the materials you will need.

CARE & MAINTENANCE

Finish: For long lasting finish, periodically clean and wax the exterior surface. Touch-up scratches as soon as you notice them on your unit. Immediately clean the area with a wire brush; wash it and apply touch-up paint per manufacturer's recommendation.
Roof: Keep roof clear of leaves and snow with long handled, soft-bristled broom. Heavy amounts of snow on roof can damage building making it unsafe to enter. In snow country, Roof Strengthening Kits are available for most Arrow Buildings for added protection against heavy snow accumulation.
Doors: Always keep the door tracks clear of dirt and other debris that prevent them from sliding easily. Lubricate door track annually with furniture polish or silicone spray. Keep doors closed and locked to prevent wind damage
Fasteners: Use all washers supplied to protect against weather infiltration and to protect the metal from being scratched by screws. Regularly check your building for loose screws, bolts, nuts, etc. and retighten them as necessary.
Moisture: A plastic sheet (vapor barrier) placed under the entire floor area with good ventilation will reduce condensation.
Other Tips....
Wash off inked part numbers on coated panels with soap and water.
Silicone caulking may be used for watertight seals throughout the building.
Do not store swimming pool chemicals in your building. Combustibles and corrosives must be stored in air tight approved containers.

PART	NO.	Qty.
	1	2
	2	2
	3L	1
	3R	1
	4L	1
	4R	1
	5	1
	6	1
	7	1
	8	1
	9	2
	10L	1
	10R	1
	11	2
	13	4
	14L	4
	14R	4
	15	2
	16	2
	17	2
	18	2

PART	NO.	Qty.
	19	2
	20	4
	21L	2
	21R	2
	22	2
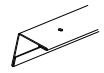	23	2
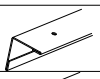	24L	1
	24R	1
	25L	1
	25R	1
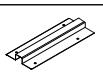	27	2
	P1	2
	P1A	2
	P2	2
	P2A	2
	P3	22
	P4B	2
	P5	8
	P6	8
	P7	2
	D1	1

PART	NO.	Qty.
	D2	1
	W1	8
	W2	12
	W3	4
	W5	4
	B1	2
	B2	2
	B3	4
	G2	4
	GB	2
	GC	4
	GD	4
	GE	2
	GF	4
	F1	541
	F2	140
	F3	8
	S1	300
	S2	560
	GN	4
	F4	16

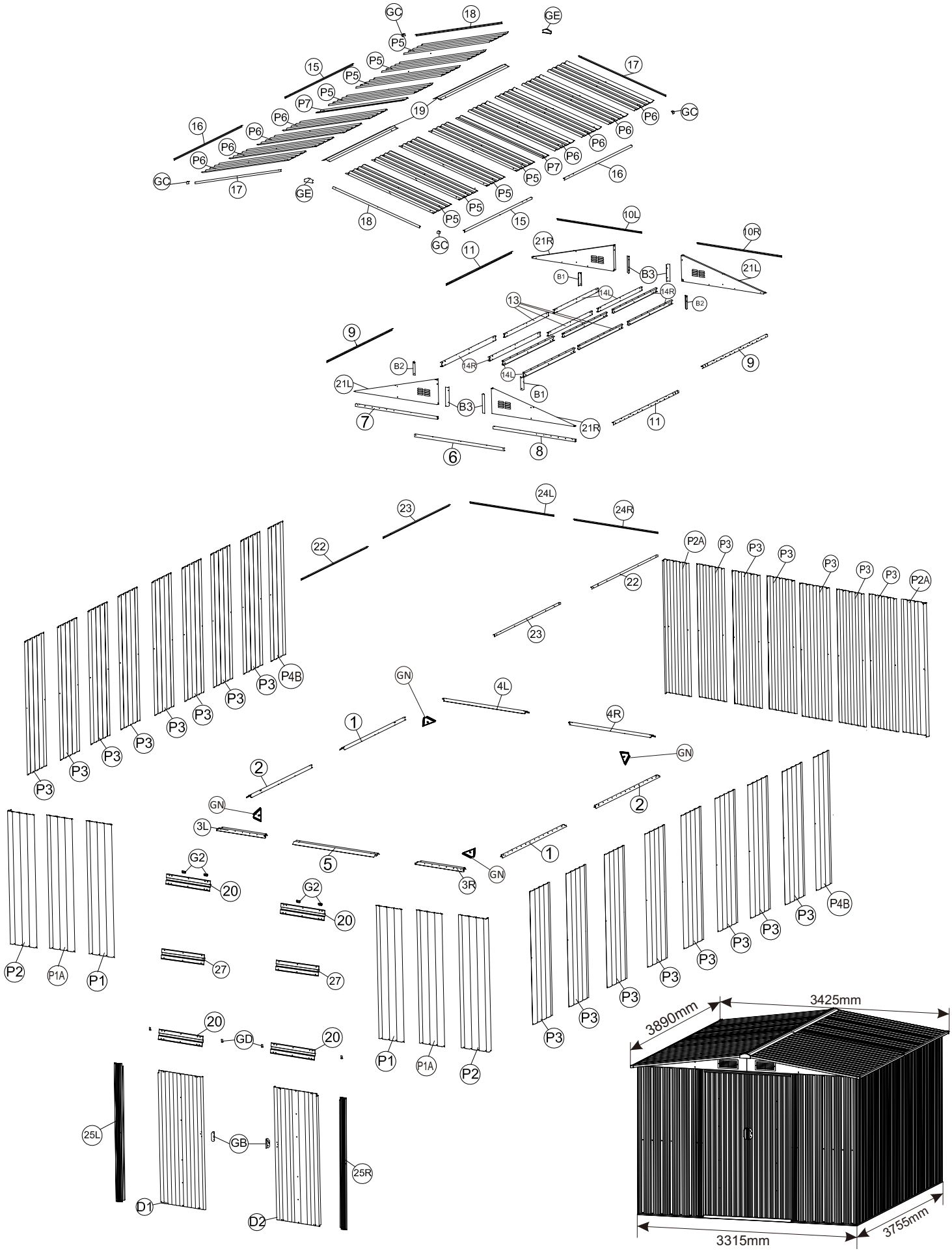
3425mm
3890mm
3315mm
3755mm

1

Assemble base bars from(1)to(4R) with(F1)Screws. Then place the entrance taper channel (5)on top of the bar(3L)and(3R). Secure with (F1)screws to the foundation. Seeing the following figures.Make sure the base bar assembly in a perfect square.

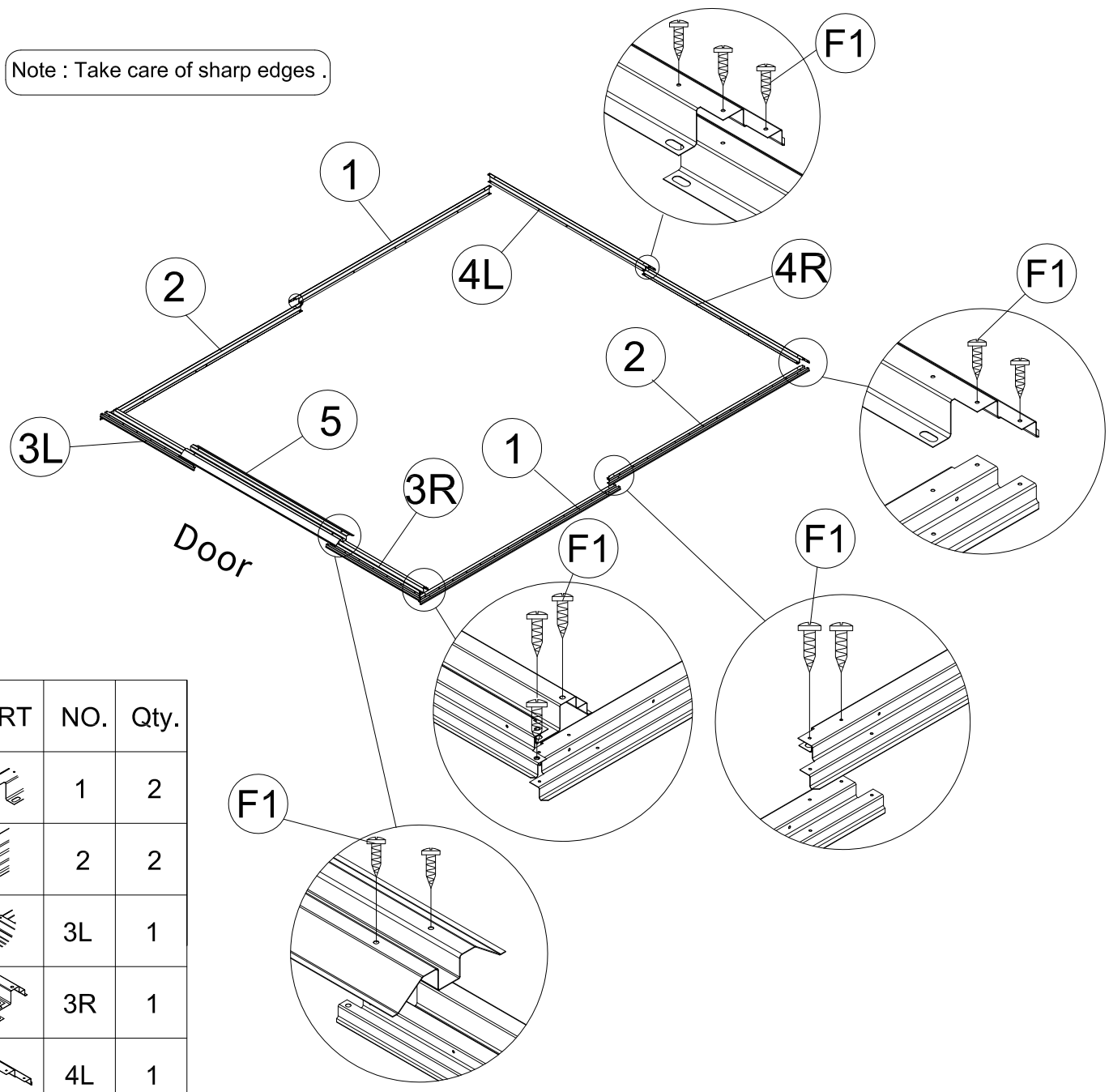

PART	NO.	Qty.
	1	2
	2	2
	3L	1
	3R	1
	4L	1
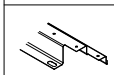	4R	1
	5	1
	F1	24

2

Add on the The four corners of the Foundation,
let the shed more strong.

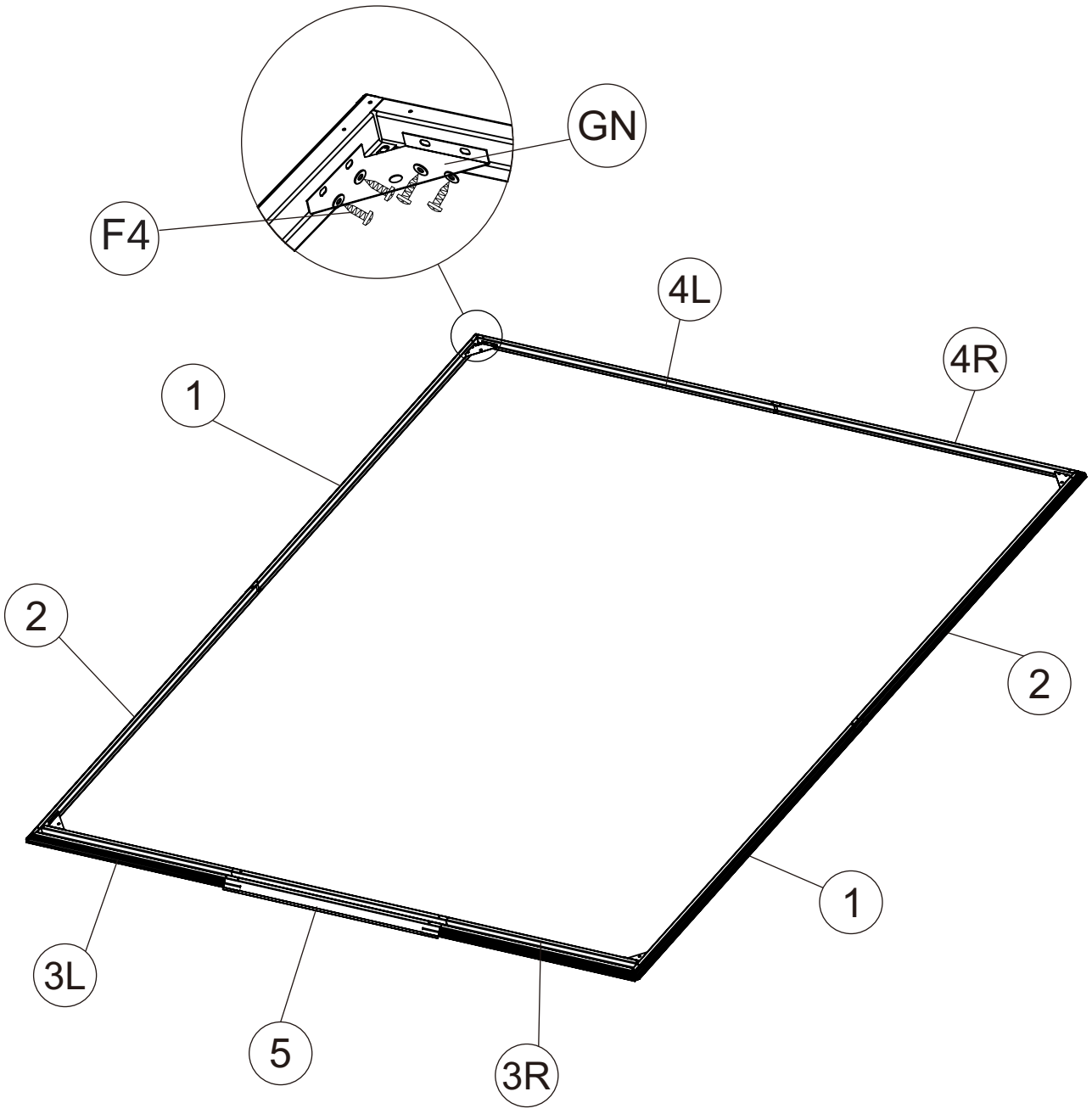

PART	NO.	Qty.
	GN	4
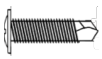	F4	16

3

Attach wall panels to the base frame using F1+S2. Attach 22, 23, 24L and 24R to wall panel using F1+S2. Join 22, 23, 24L and 24R using only F1.

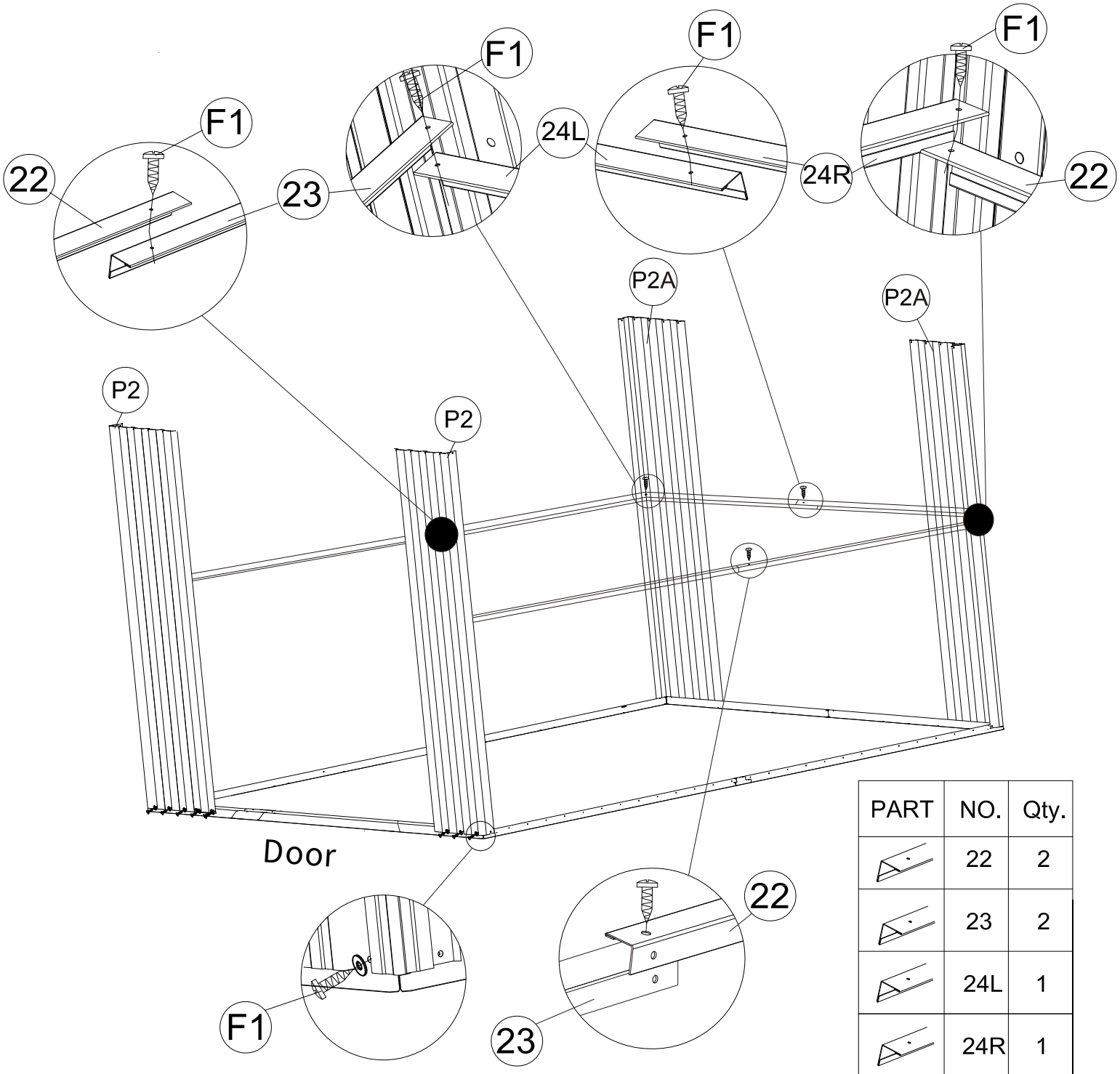

PART	NO.	Qty.
	22	2
	23	2
	24L	1
	24R	1
	P2	2
	P2A	2
	F1	31

4

Attach wall panels to the base frame using F1+S2. Follow the order of right, back, left and front.

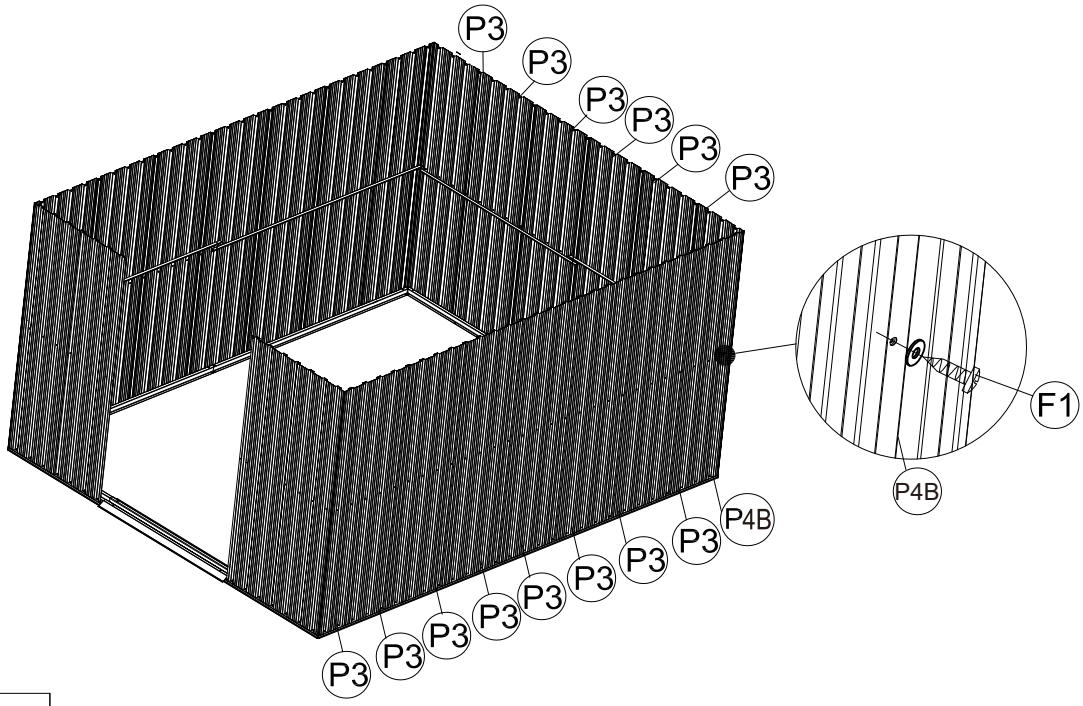

PART	NO.	Qty.
	P1	2
	P1A	2
	P3	22
	P4B	2
	F1	193

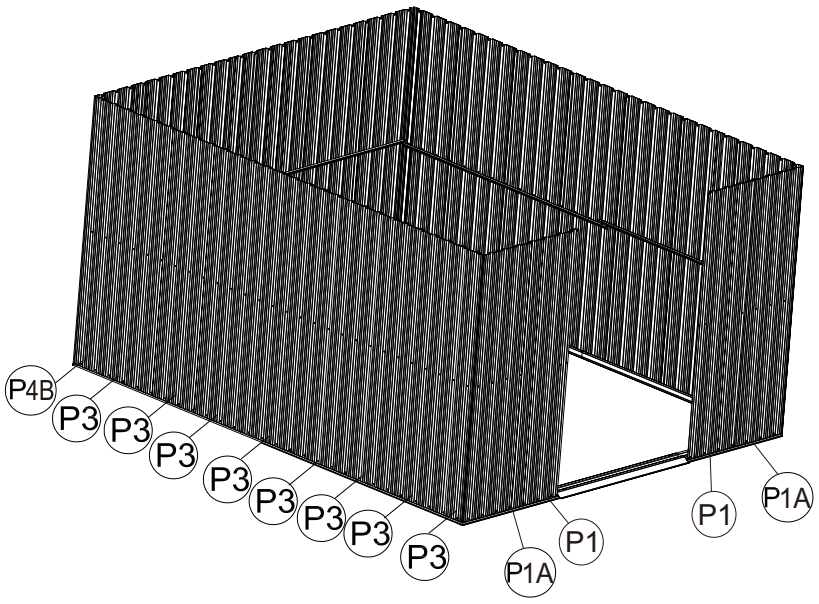

5

Join 7 and 8 together using 6 and F1. Start with the two screw holes in the middle of 6's top side.
Slide two G2 inside the channel of 7 and 8. After it is done, screw holes on G2 are visible to you.

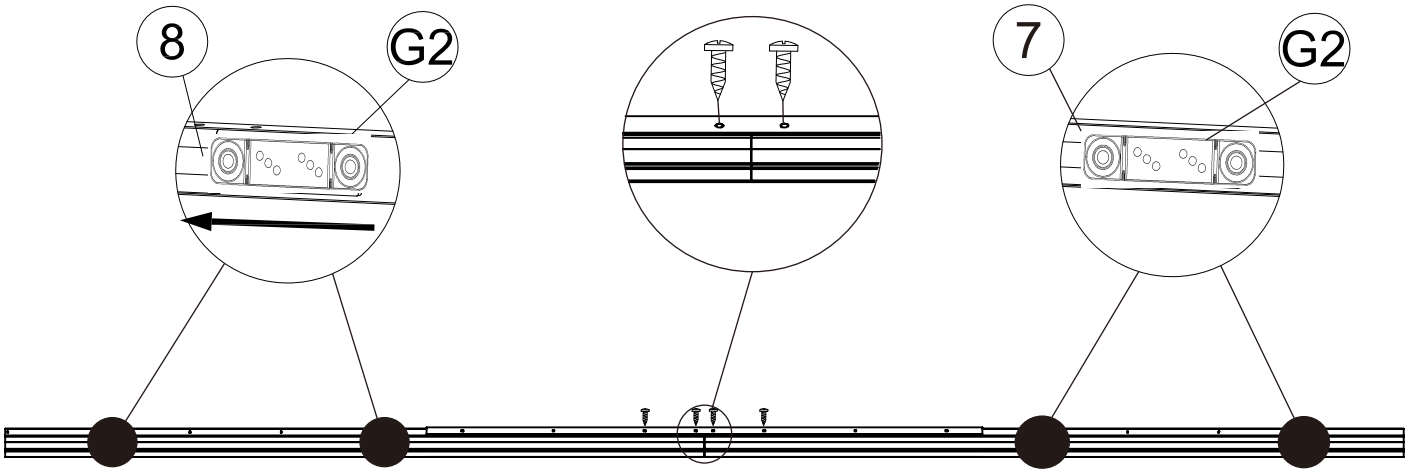

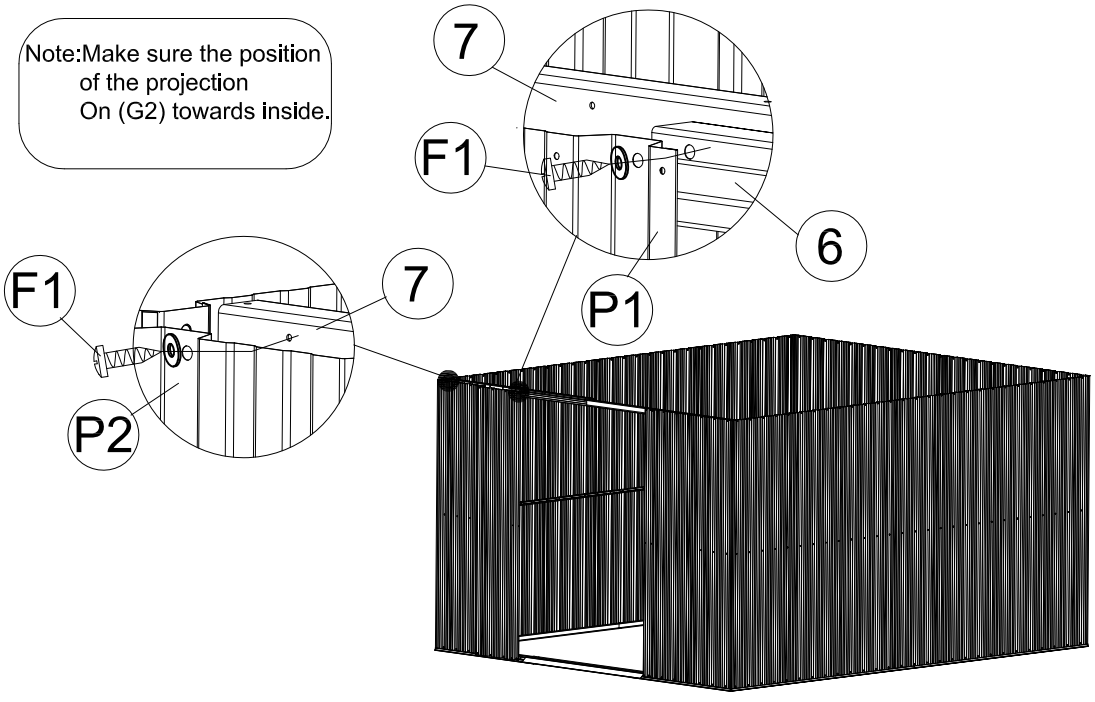

PART	NO.	Qty.
	6	1
	7	1
	8	1
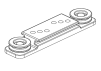	G2	4
	F1	12

6 **Place the top angle bars(9),(10L),(10R)and(11)on the top of wall panel.Line up the holes with wall panels and fix with (F1) screws.**

Note: Make sure the overlapping Position .

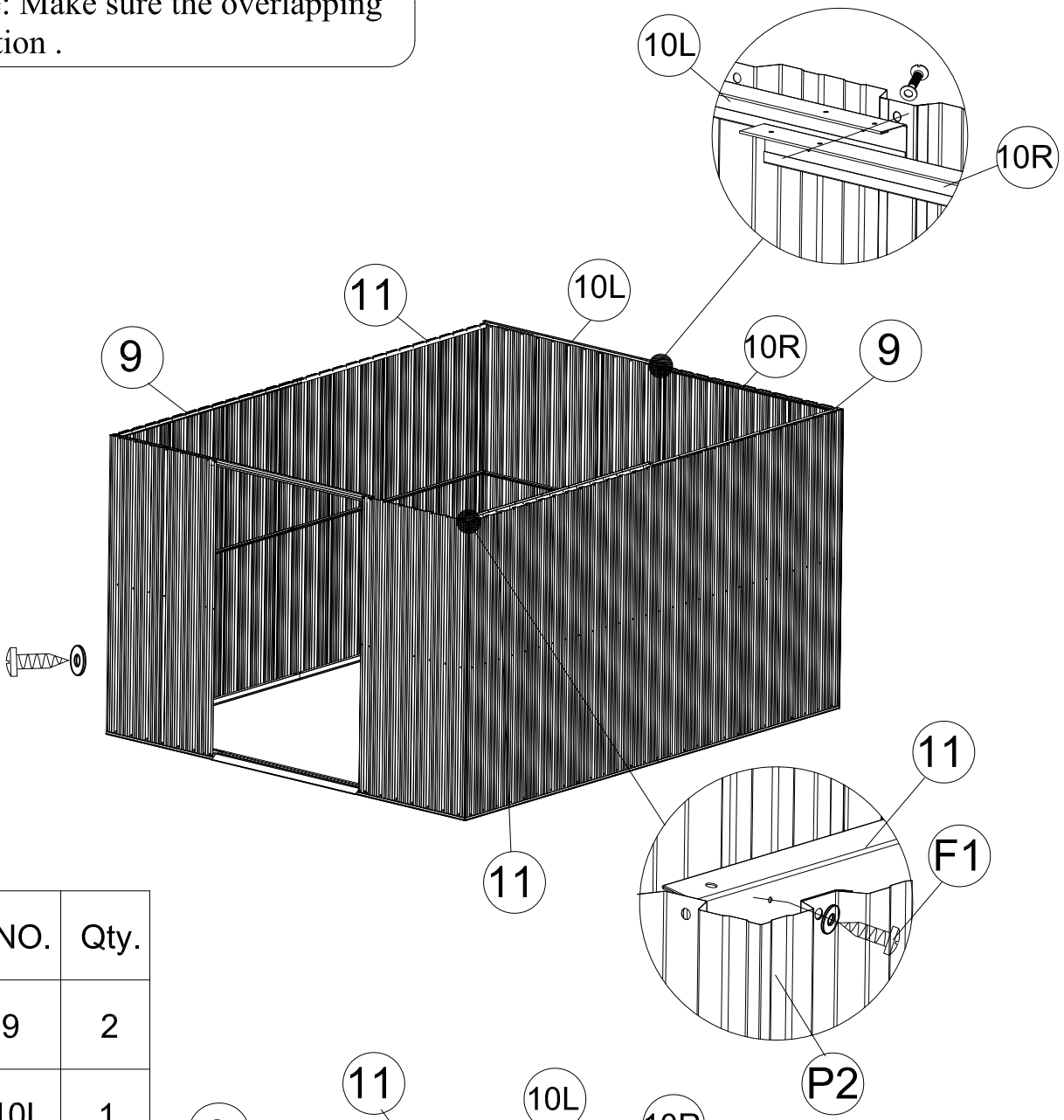

PART	NO.	Qty.
	9	2
	10L	1
	10R	1
	11	2
	F1	103

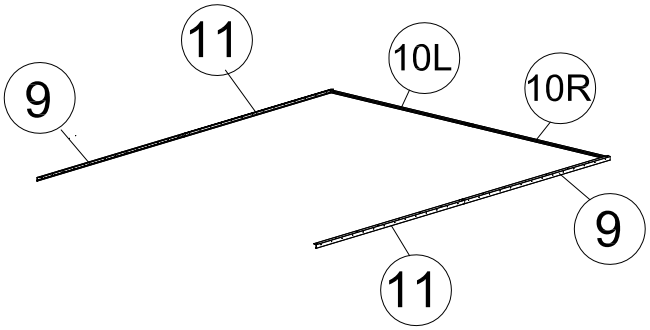

7

Place te lef door colu (25L) on te top ofbase ba (3L). Insert into the wall pael. Ten secue the door colun (25L) wit (F1) screws.Repeat te sae for te right door colun (25R).

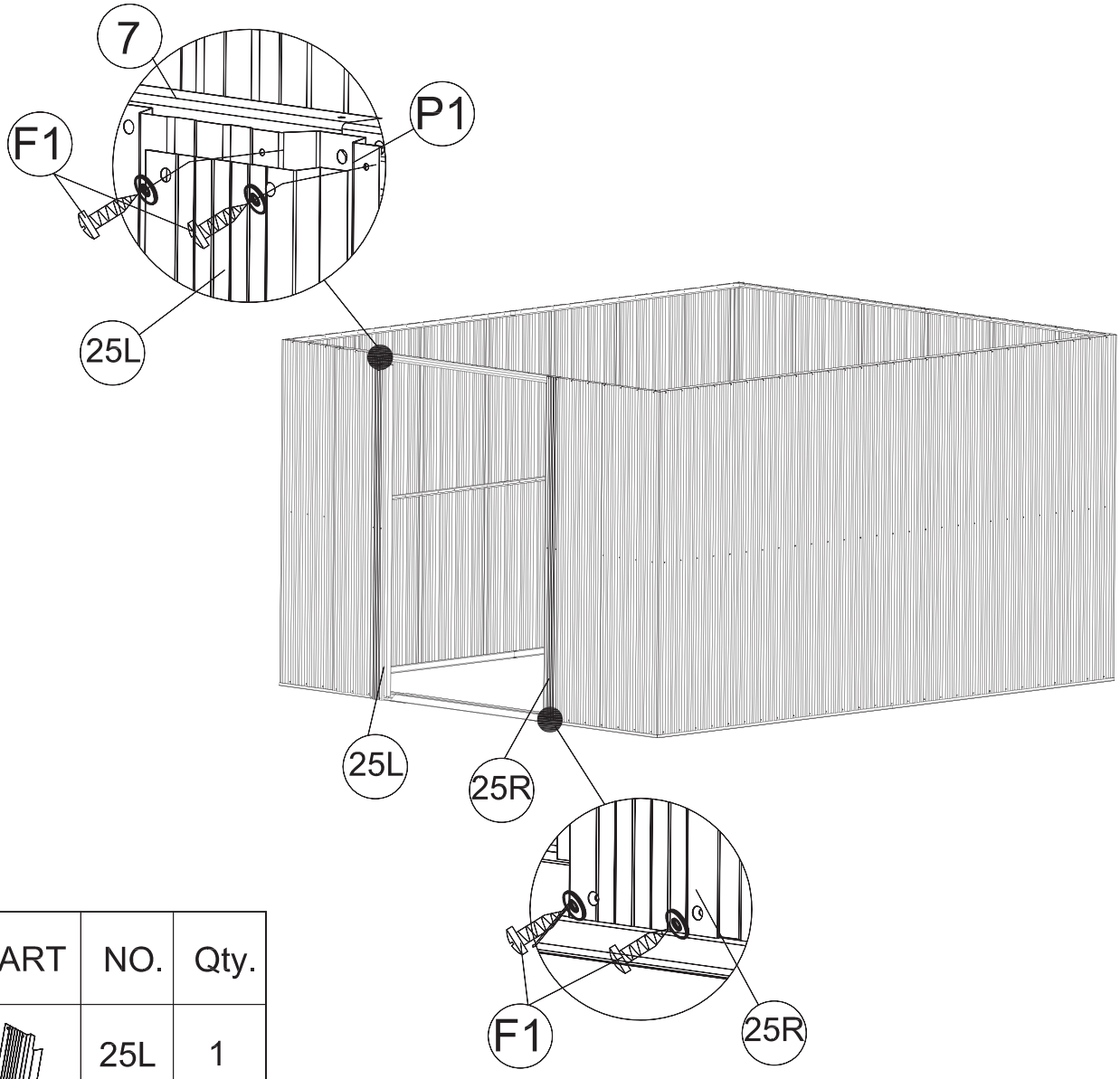

PART	NO.	Qty.
	25L	1
	25R	1
	F1	12

8

Place 4 gable boards (21L) and (21R). Then assemble each gable plate (21L) and (21R) with connector (B1) and assemble connector (B1) as shown. Secure them and nuts with (F2) bolts. See below. Connect the two roof brackets (14R) and (13) and (14L) together.

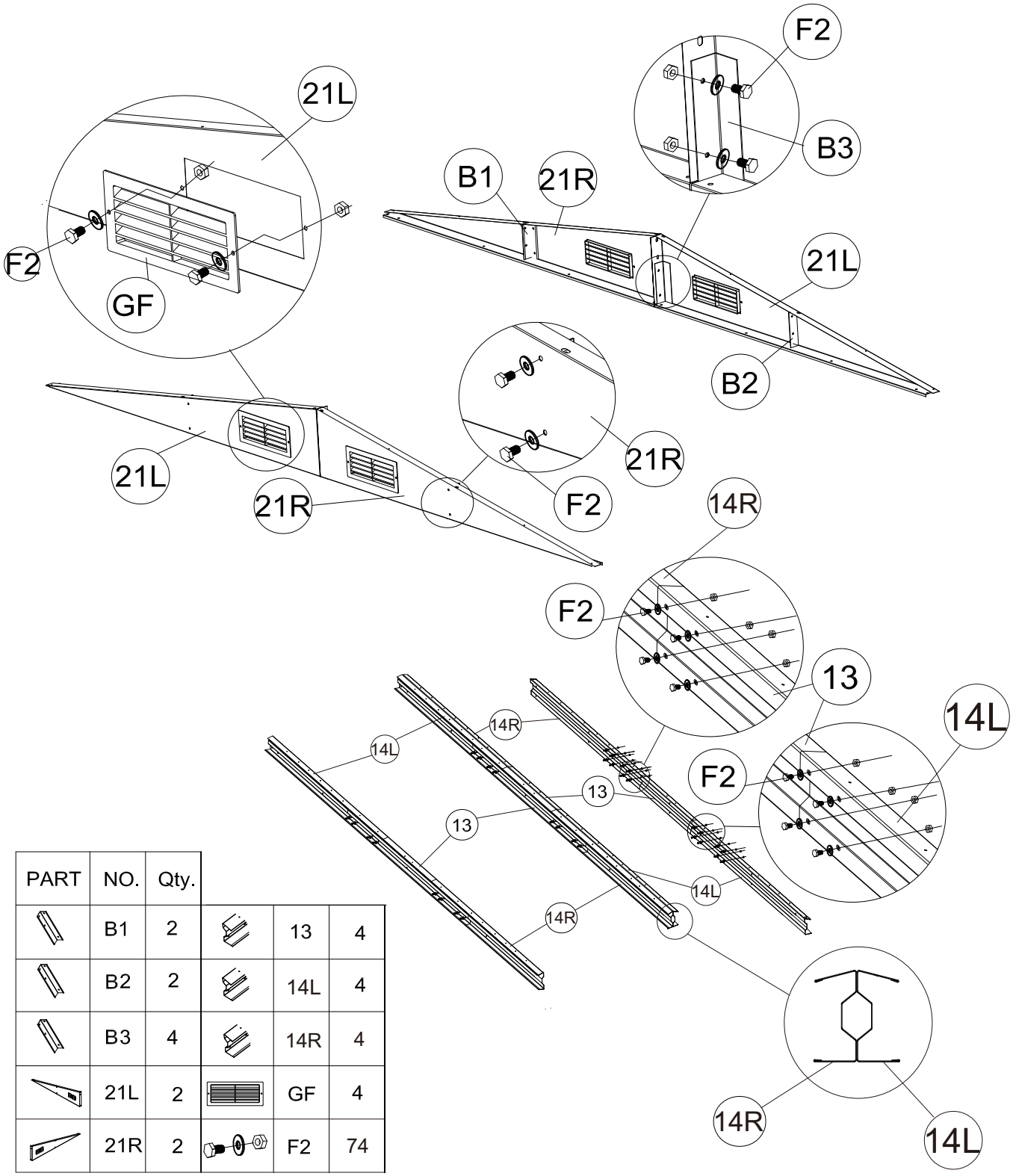

PART	NO.	Qty.			
	B1	2		13	4
	B2	2		14L	4
	B3	4		14R	4
	21L	2		GF	4
	21R	2		F2	74

9

Place 4 gable panels (21L) and (21R) on top of sliding channel (7).(8) and rear top strip (10L).(10R), align as shown, then attach 4 sets of roof structure into Gabel parels (21L) and (21R). Align holes and secure with (F2) bolts and nuts.

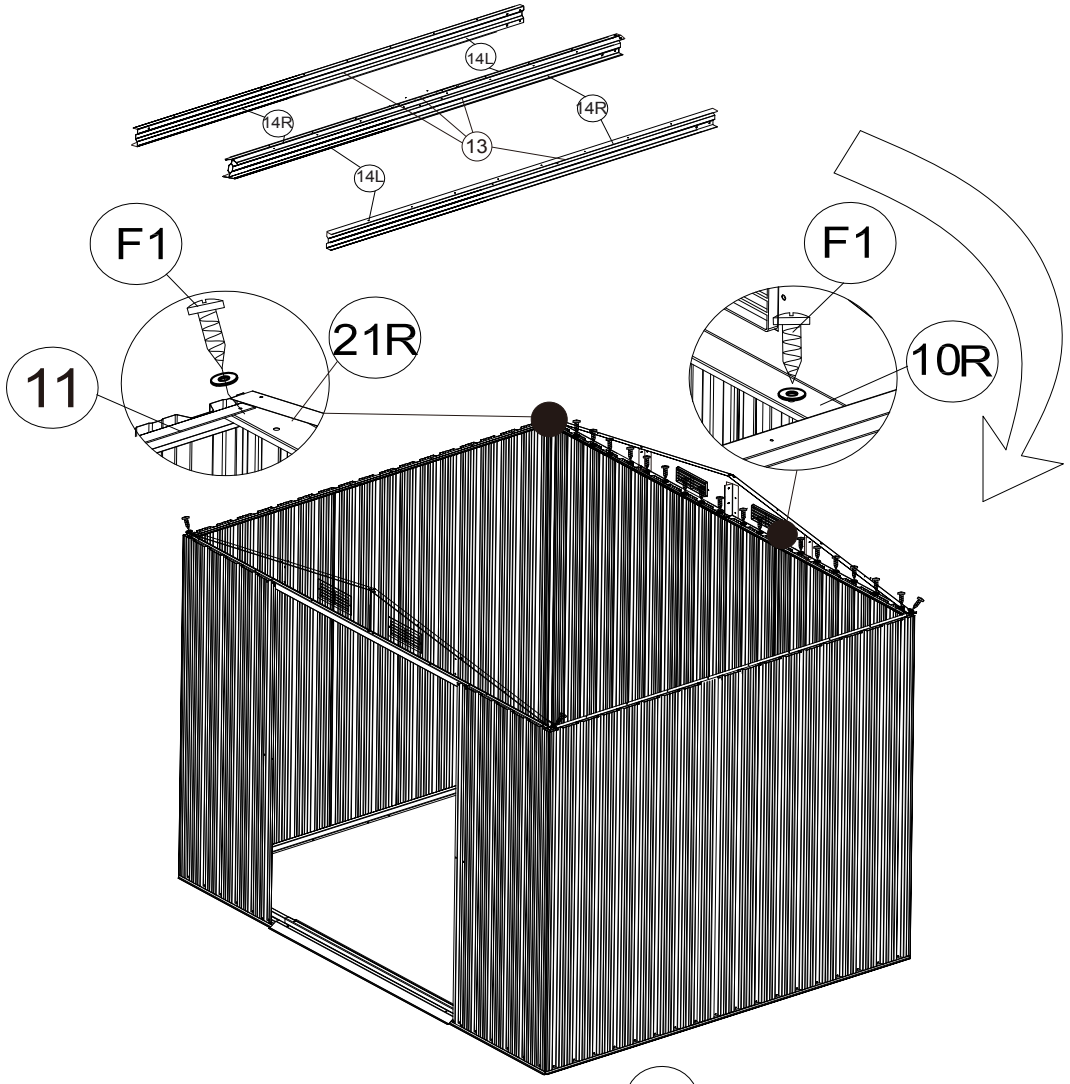

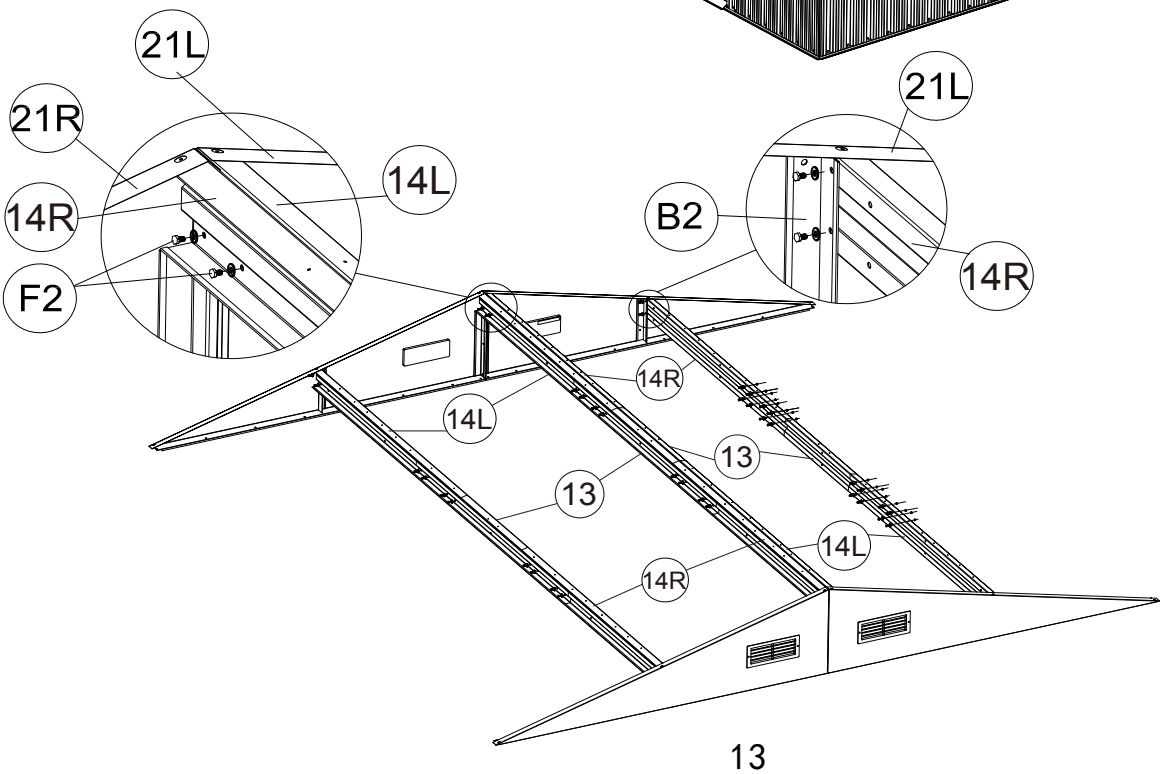

PART	NO.	Qty.
	F1	36
	F2	16

10

Place the roof panels (P5),(P6) and (P7) on the top of Gable panels and roof supports.Line up the boles and secure with (F1) bolt andnut with washers.

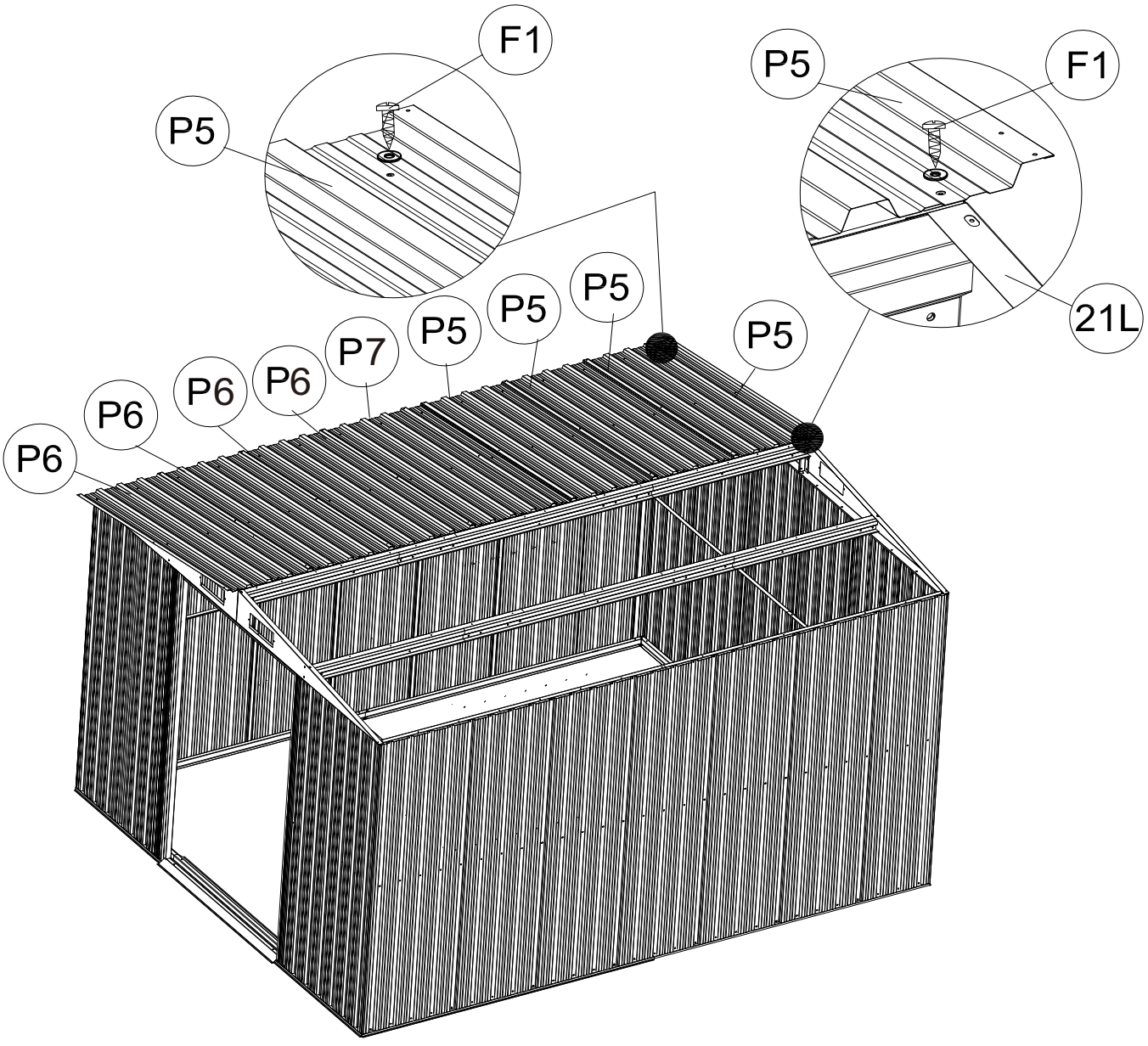

PART	NO.	Qty.			
	P5	4			
	P6	4			
	P7	1		F1	54

11 **Place the roof panels (P5),(P6) and (P7) on the top of Gable panels and roof supports.Line up the boles and secure with (F1) bolt andnut with washers.**

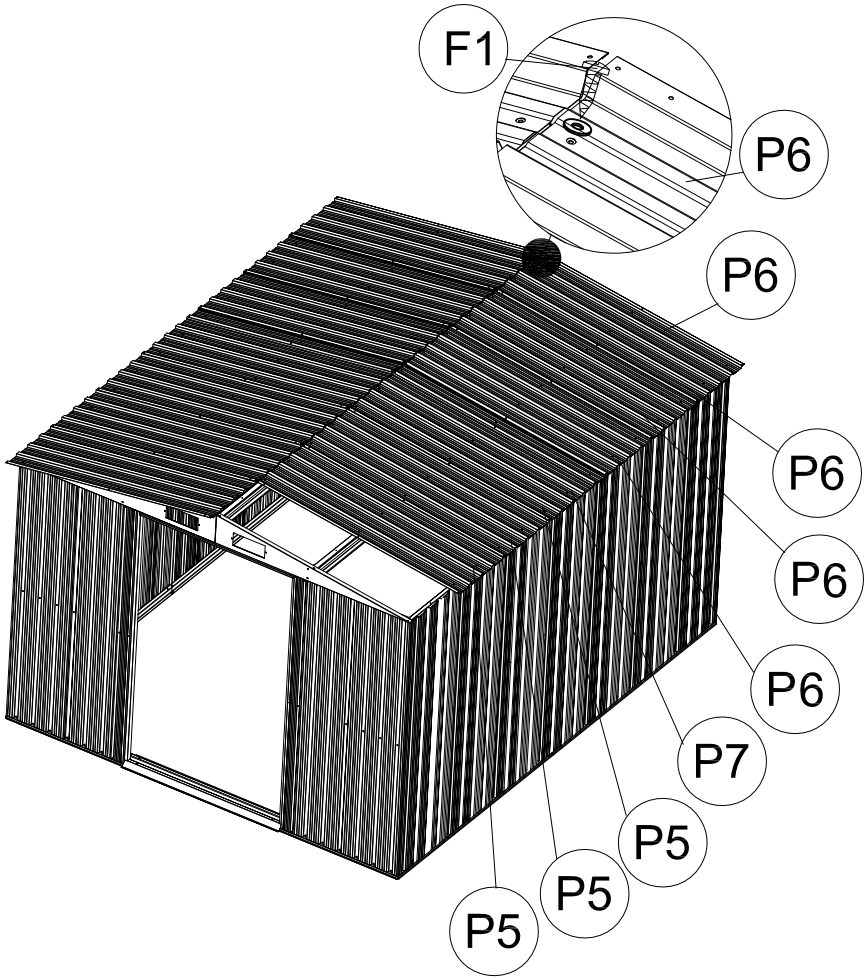

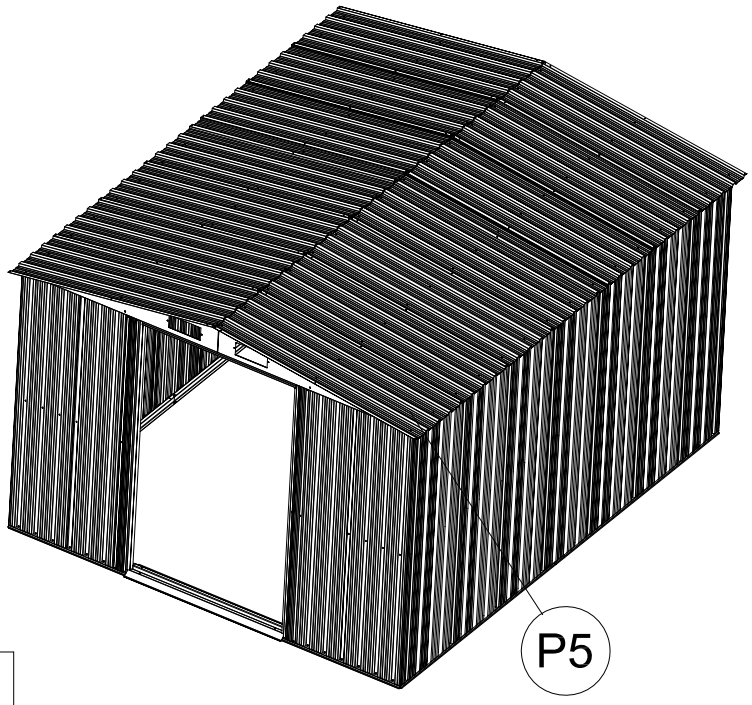

PART	NO.	Qty.			
	P5	4			
	P6	4			
	P7	1		F1	54

12

Assemble the roof flashing (15),(16) and (17),(18) with roof panels secure with (F1) screws with washers.Then place 4 piece of top corner (GC) on the roof flashing joints. and secure with (F1) screws with washers.

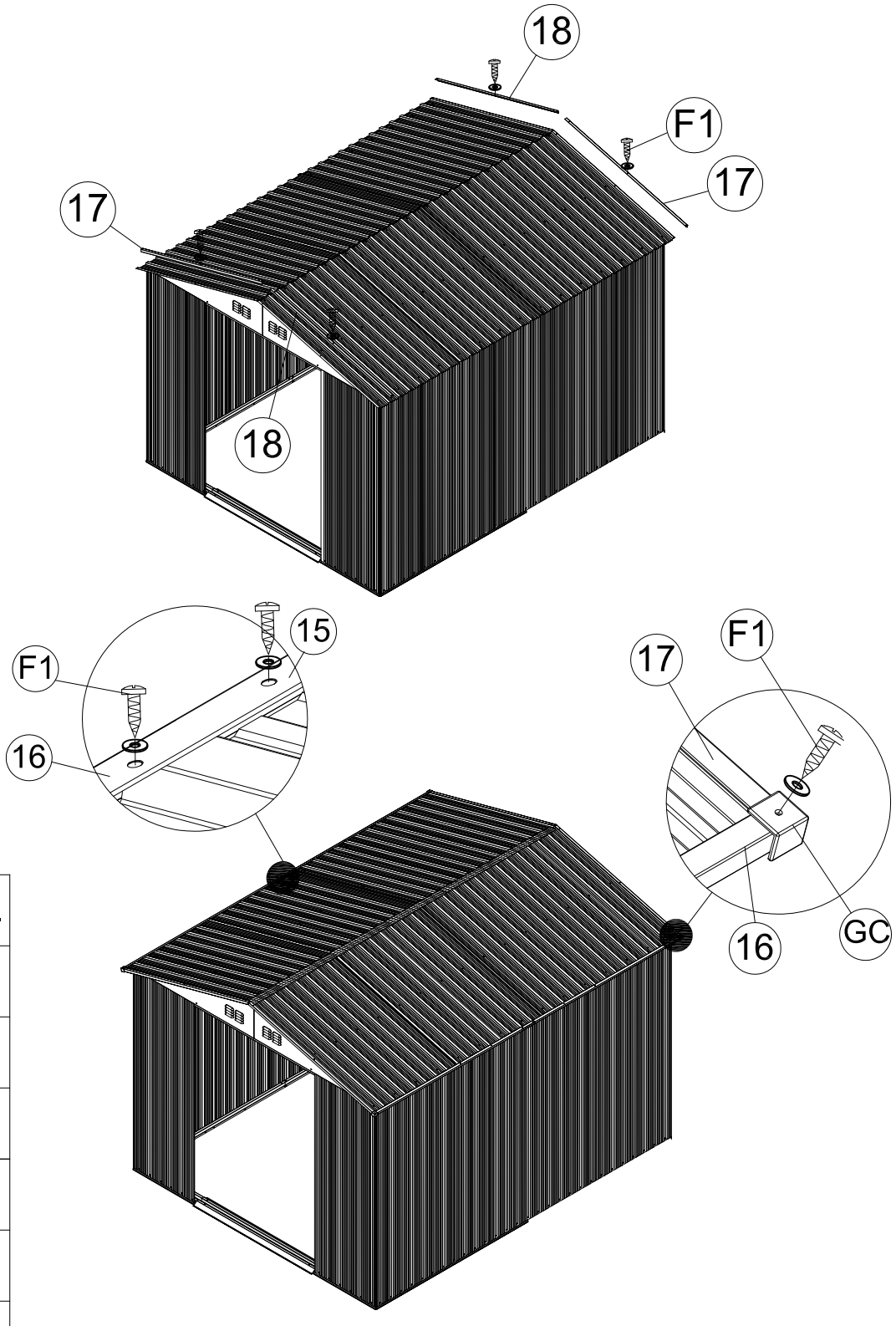

PART	NO.	Qty.
	15	2
	16	2
	17	2
	18	2
	GC	4
	F1	18

13

Place two pieces of the roof flashing center (19) on top of the roof panels. Line up the holes and secure them with (F1) screws with washers.Then slide the flashing end cap (GE) to the front & back top of the roof and secure with (F1) screws with washers. See figures below.

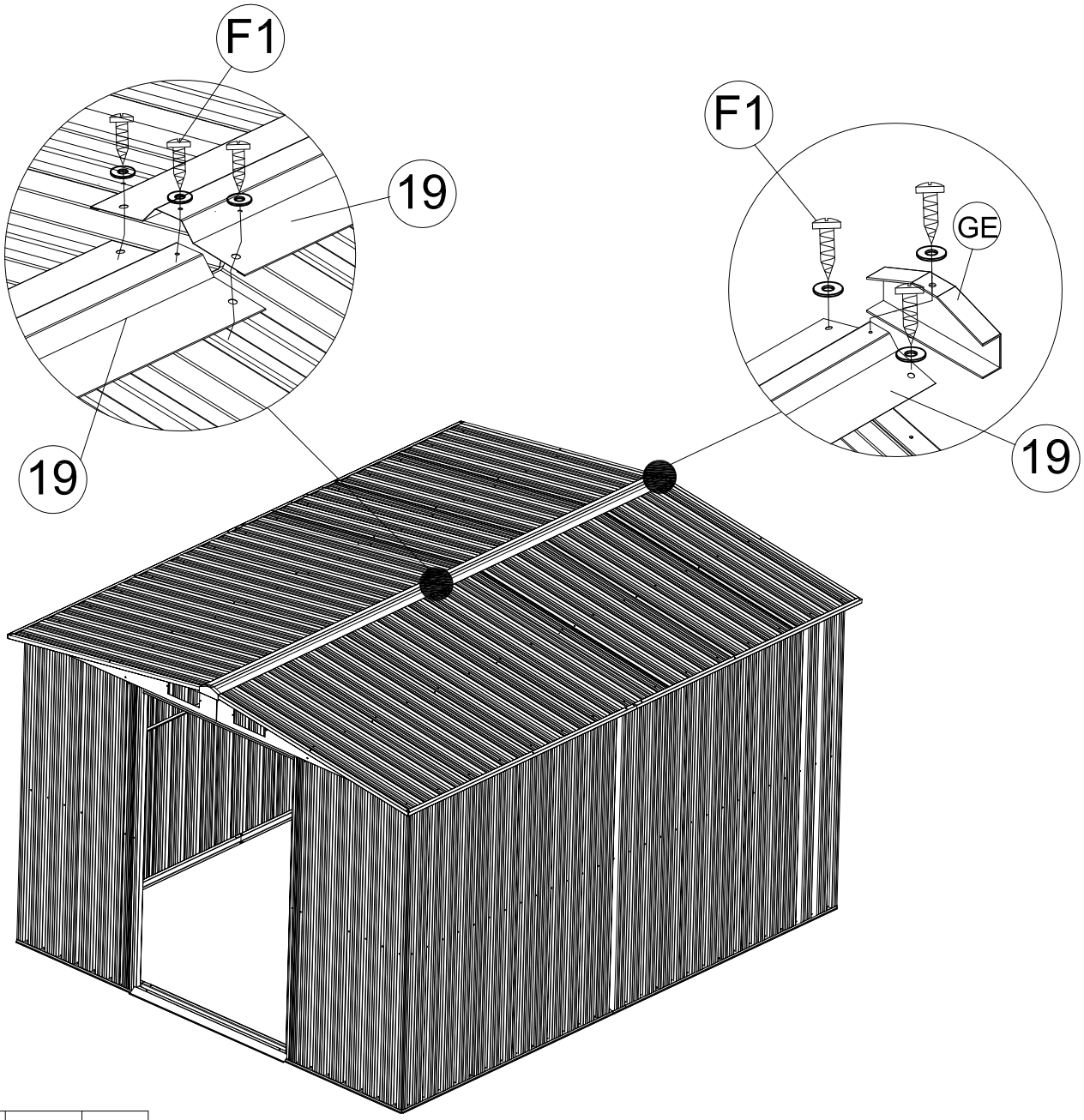

PART	NO.	Qty.
	19	2
	GE	2
	F1	9

14

Assemble the door bar (20) to the door panels (D1) and (D2) and fix them withbar (27).Then assemblethe bottom slider (GD) to the door bar (20) at both bottom edges. Secure them with (F2) bolt and nut with washer

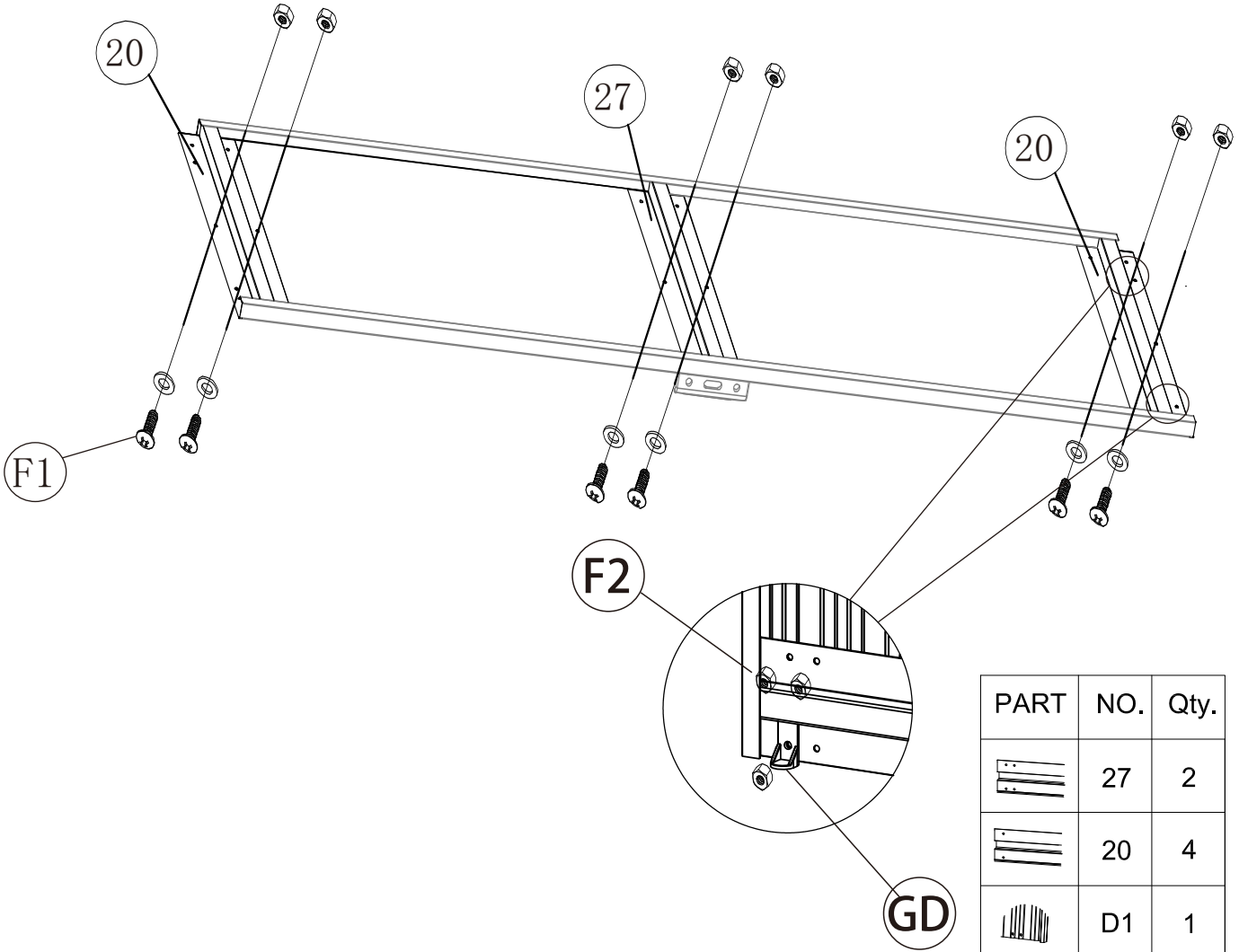

PART	NO.	Qty.
	27	2
	20	4
	D1	1
	D2	1
	GD	4
	F2	44

15

Fix2 pieces of the door handle (D2) with door panels from inside with (F2) bolt and nut.?

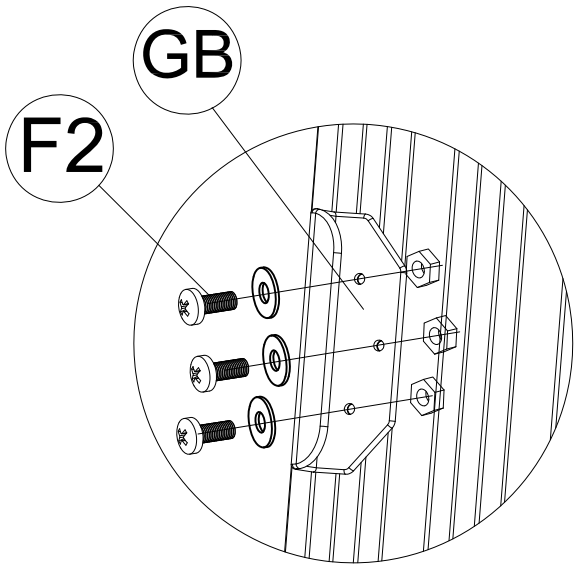

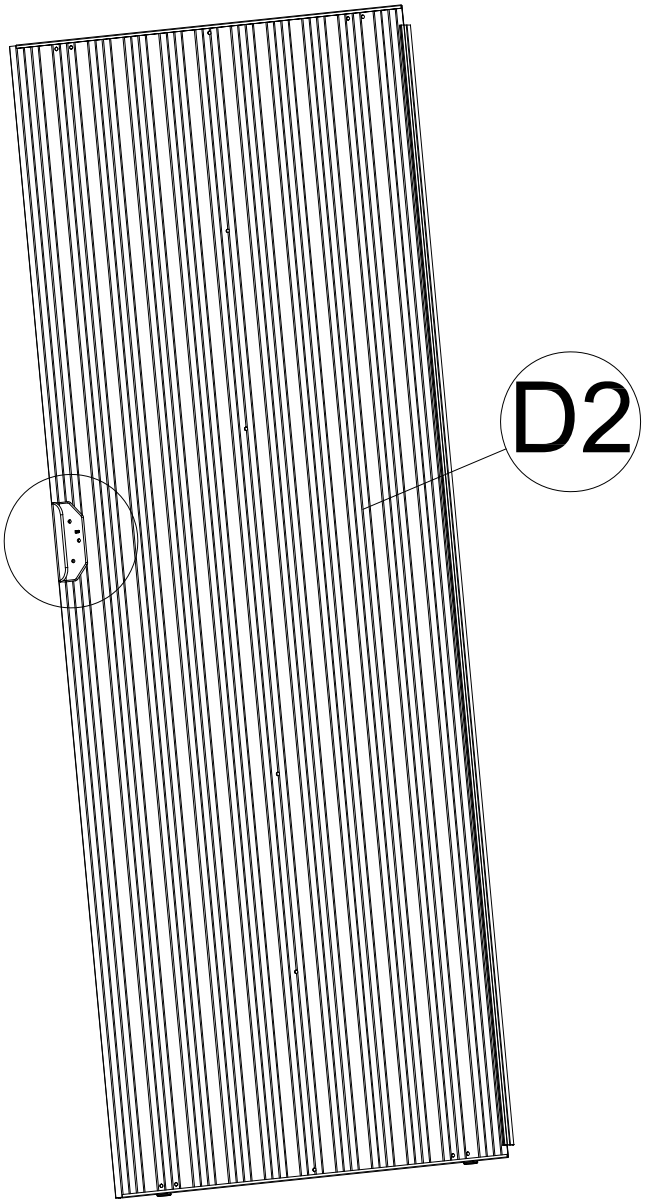

PART	NO.	Qty.
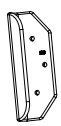	GB	2
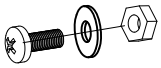	F2	6

16

Slide the door panel assembly into the base bar(3L) Make sure the bottom slider(GD)should slide inside the base bar(3L),Then fix the door panel top to the top slider(G2)with(F3)screws. See figures below.

Note:Make sure to get proper alignment of the door realign the holes with door panel.

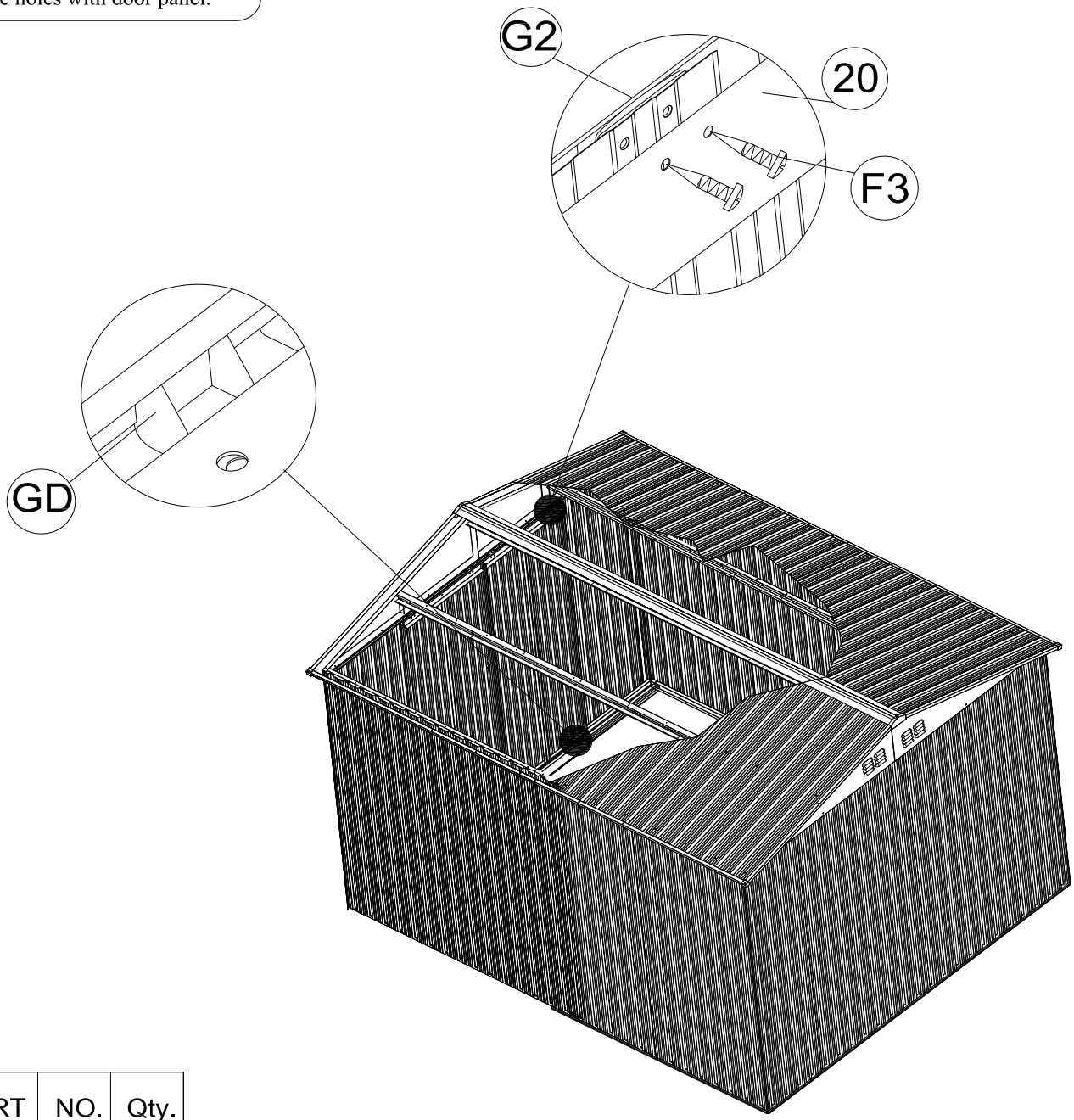

PART	NO.	Qty.
	F3	8