ZEAFiVE®

DIMENSION DETAILS

BATHROOM VANITY TOP

Email: service@bestgosupplychaininc.com

MODEL.

FX54-BY3K8



TOP VIEW

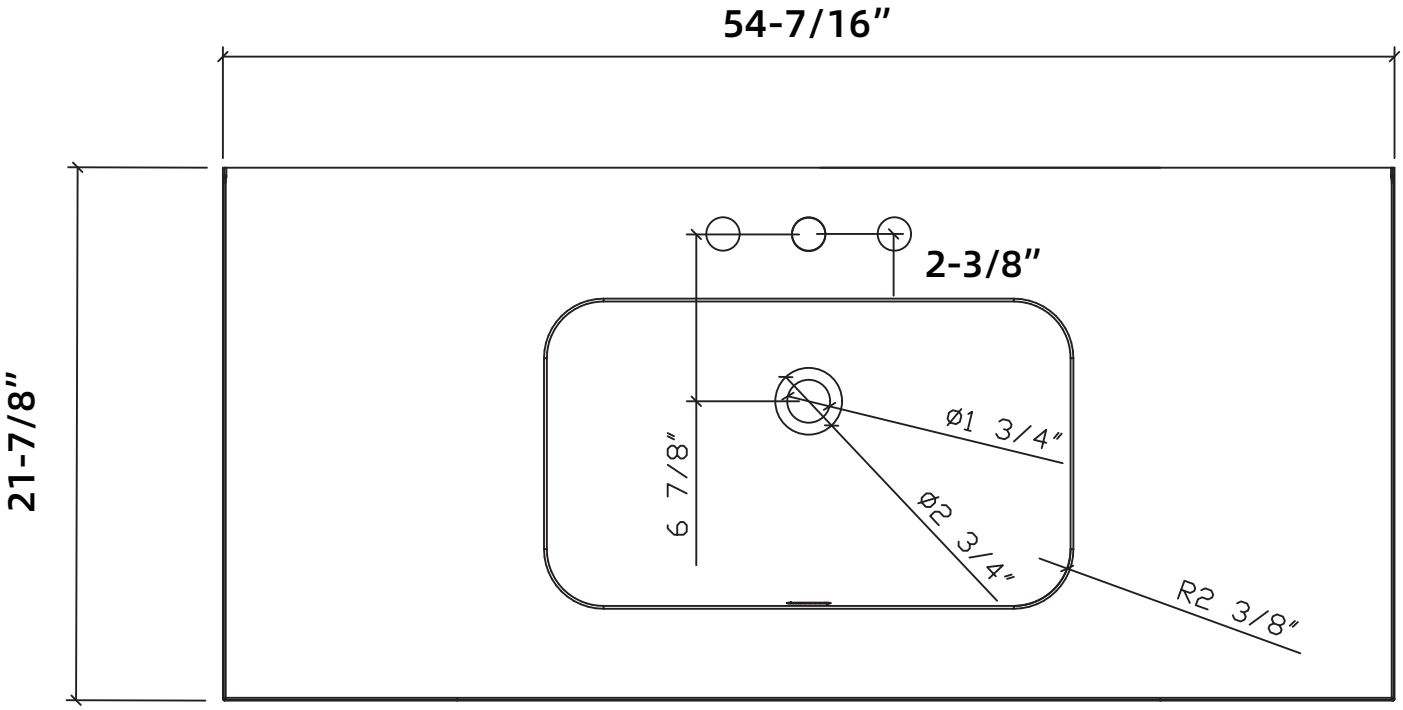

FRONT VIEW

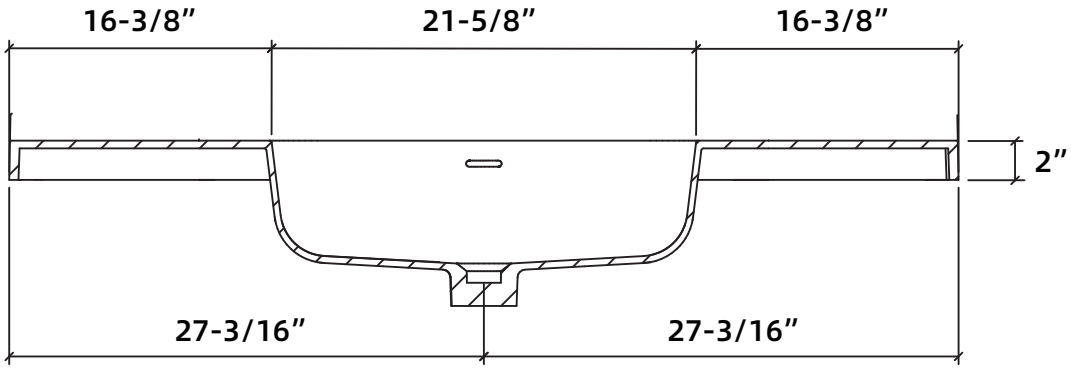

SIDE VIEW

