ASSEMBLY INSTRUCTION

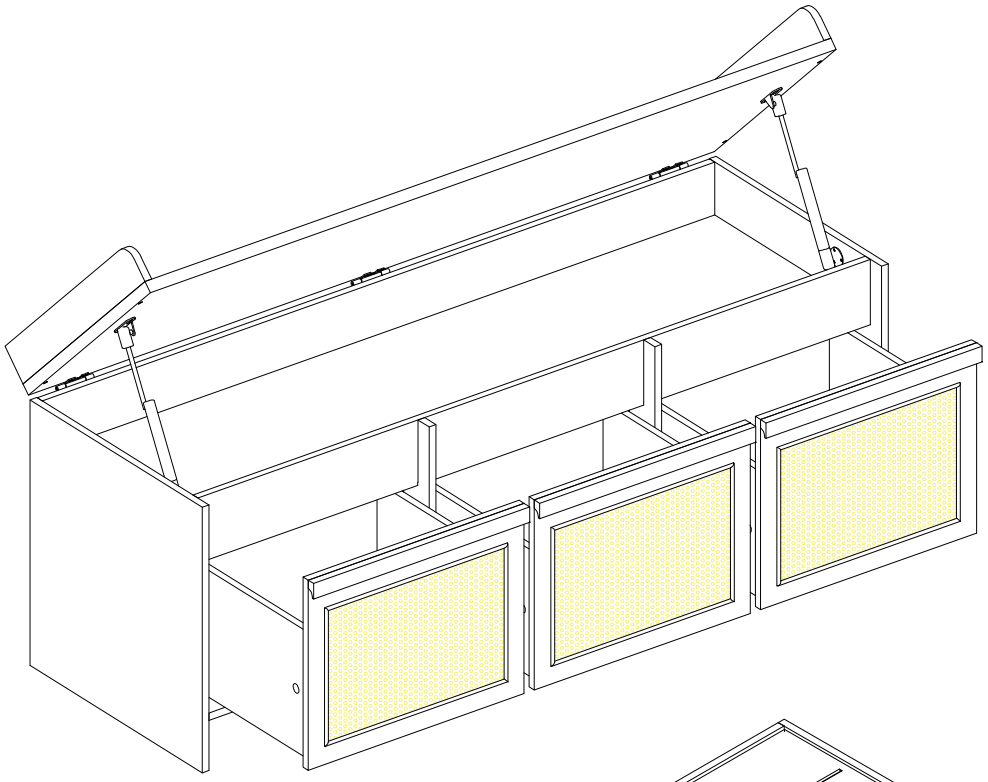

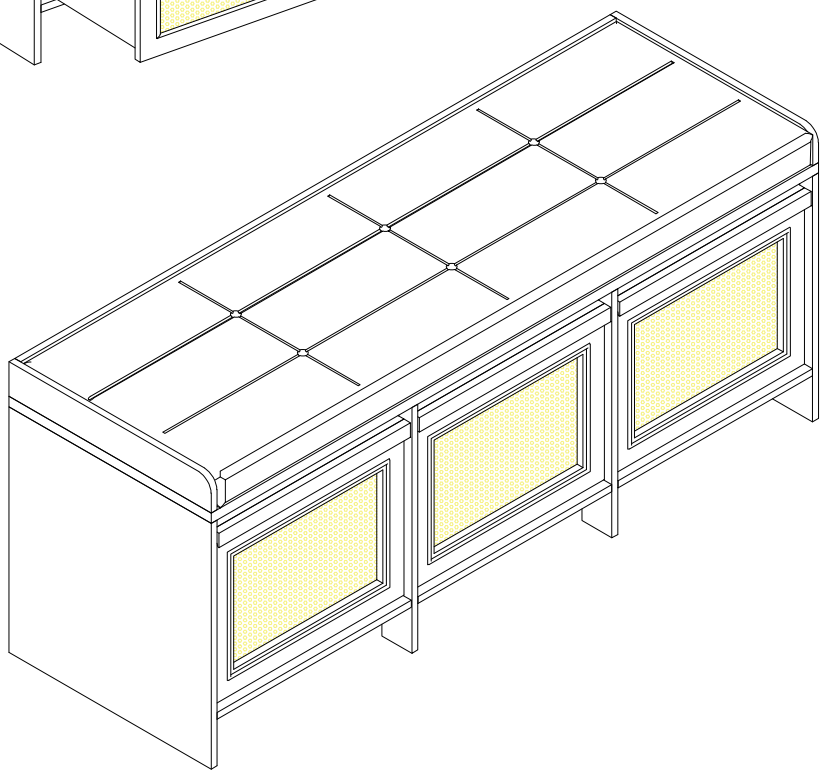

ASSEMBLY INSTRUCTION

Bench

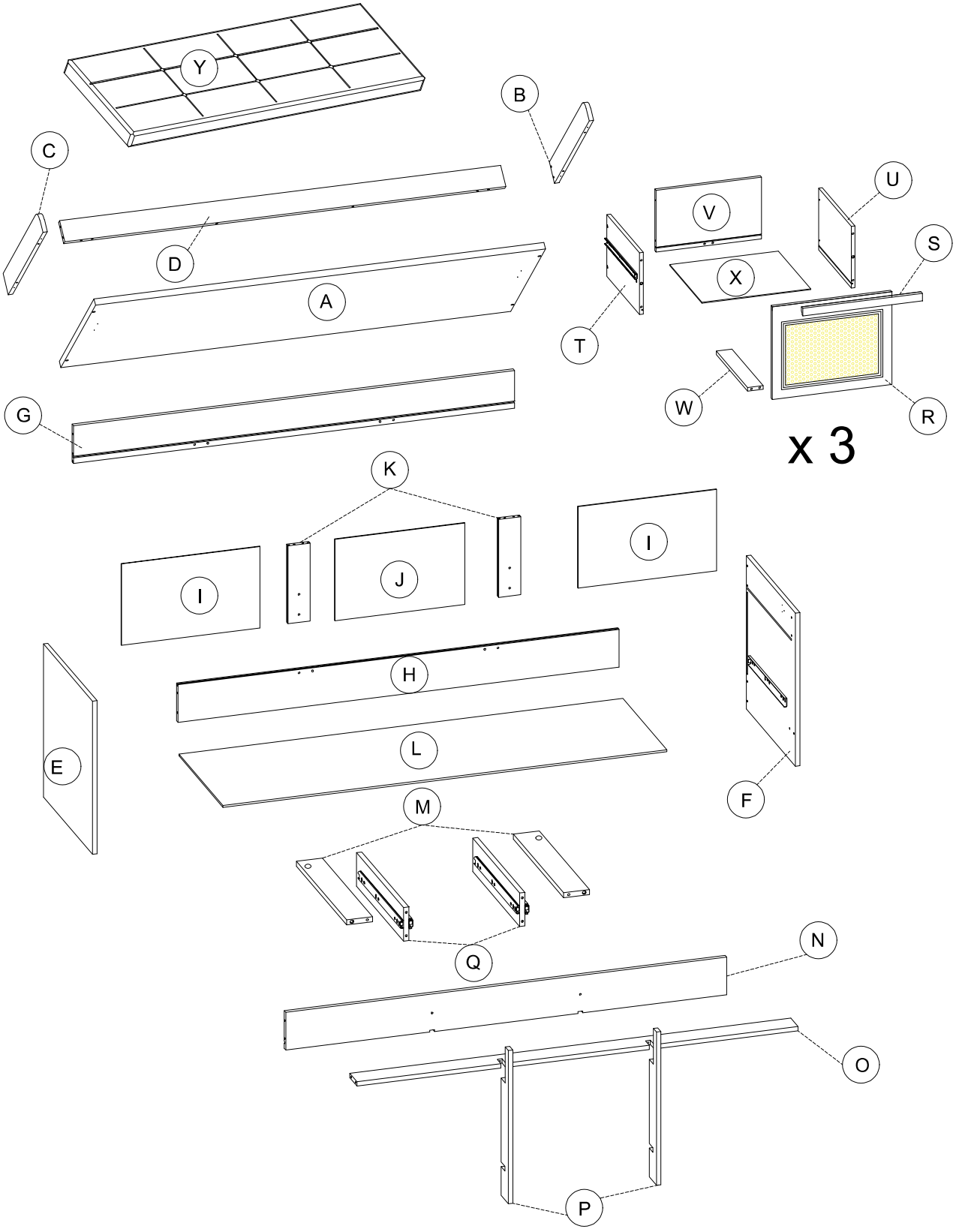

PART LIST

A x 1 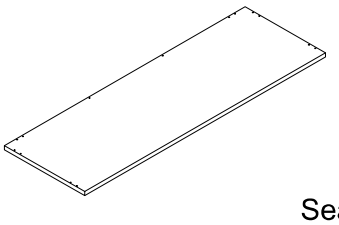 Seat Panel	B x 1 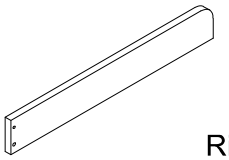 Right Seat Side Rail
C x 1 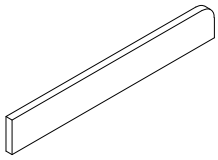 Left Seat Side Rail	D x 1 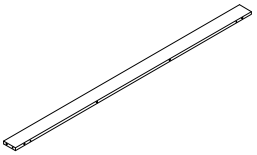 Rear Seat Cross Rail
E x 1 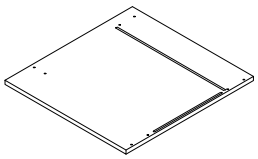 Left Side Leg Panel	F x 1 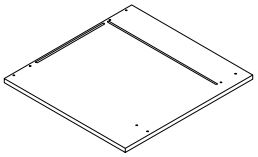 Right Side Leg Panel
G x 1 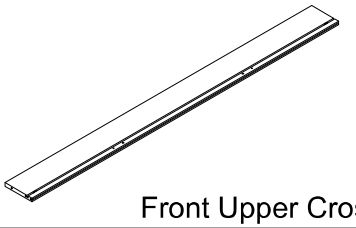 Front Upper Cross Rail	H x 1 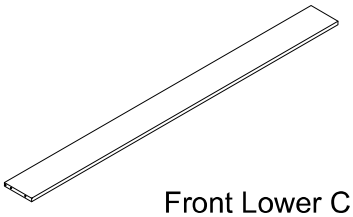 Front Lower Cross Rail
I x 2 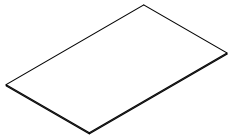 Back Side Panel	J x 1 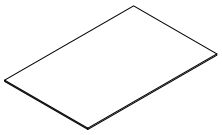 Back Middle Panel
K x 2 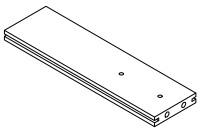 Rear Center Vertical Rail	L x 1 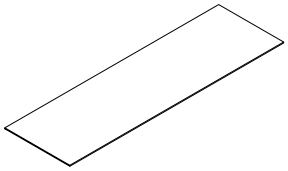 Seat Box Bottom Panel
M x 2 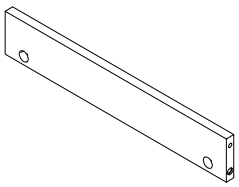 Seat Box Bottom Support Rail	N x1 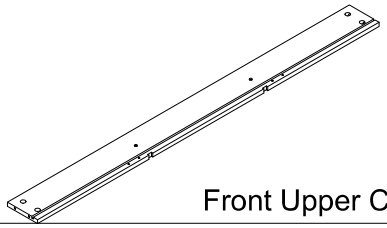 Front Upper Cross Rail

PART LIST

O x 1 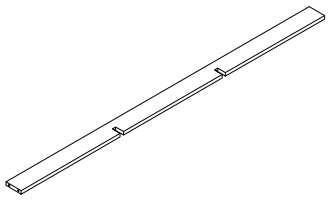 Front Lower Cross Rail	P x 2  Front Center Vertical Rail
Q x2 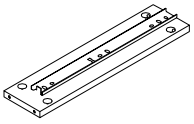 Drawer Slide Support Rail	R x 3 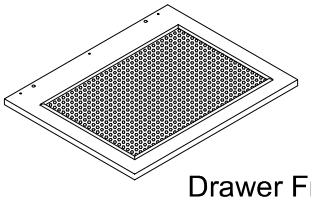 Drawer Front Panel
S x 3 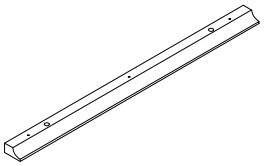 Handle	T x 3 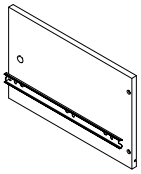 Left Drawer Side Panel
U x3 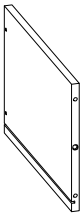 Right Drawer Side Panel	V x 3 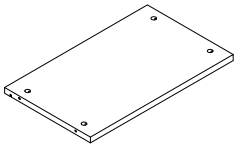 Drawer Back Panel
W x 3 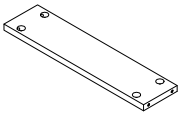 Drawer Bottom Support Rail	X x 3 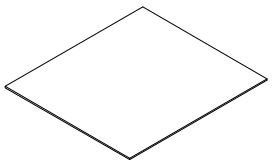 Drawer Bottom Panel
Y x1 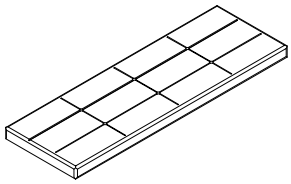 Seat cushion	

HARDWARE LIST

1 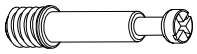 Ø6x35mm Cam Bridge 40 pcs	2  Ø15x9mm Cam Head 40 pcs	3 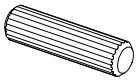 Ø6 x 30 mm Wood dowel 44 pcs
4 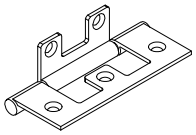 Hinge 3 pcs	5 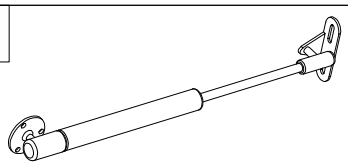 Hydraulic Lifting Arm 2pcs	6  M3.5x12mm Wood Screw 29 pcs
7 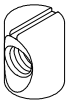 Plastic lock nut 12 pcs Ø10x10MM	8 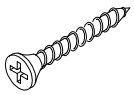 M4x25mm Wood Screw 6pcs	9 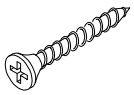 M4x45mm Wood Screw 14 pcs
10 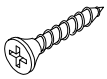 M3.5x15mm Wood Screw 9 pcs	11 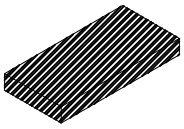 25*12*3mm Felt pads 8 pcs	12 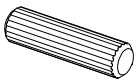 Ø6 x 20 mm Wood dowel 6 pcs
13 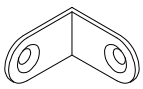 Steel bracket 2pcs		

ASSEMBLY TOOLS REQUIRED (NOT INCLUDED)

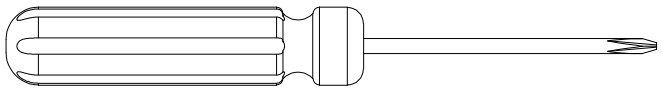

STEP 1:

Following below illustration

-Using hardware #1 connect A,B,C.

1	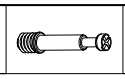	6

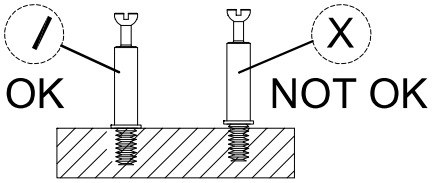

STEP 2:

Following below illustration

-Using hardware #2, #3 connect A ,B , C with D

2		6
3	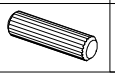	8

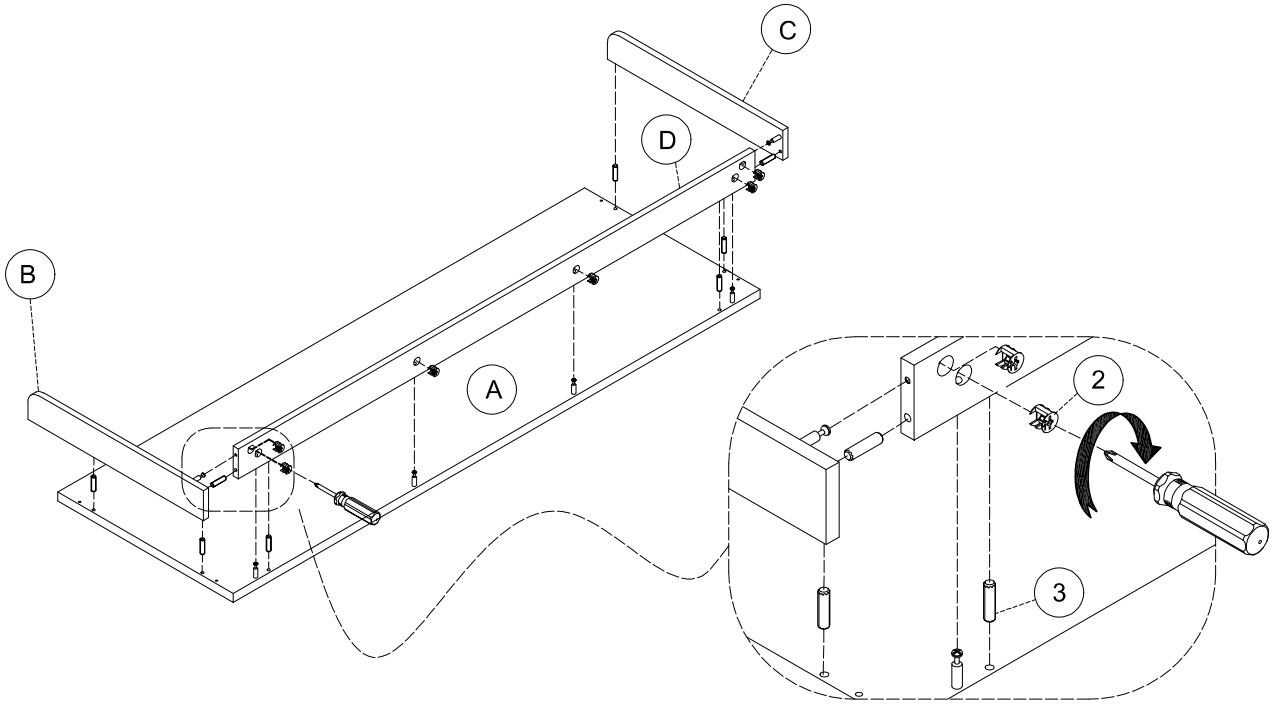

4		3	6		6
			8	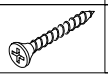	4

STEP 3: Following below illustration

-Using hardware #4 , #6 , #8 connect with Step 2.

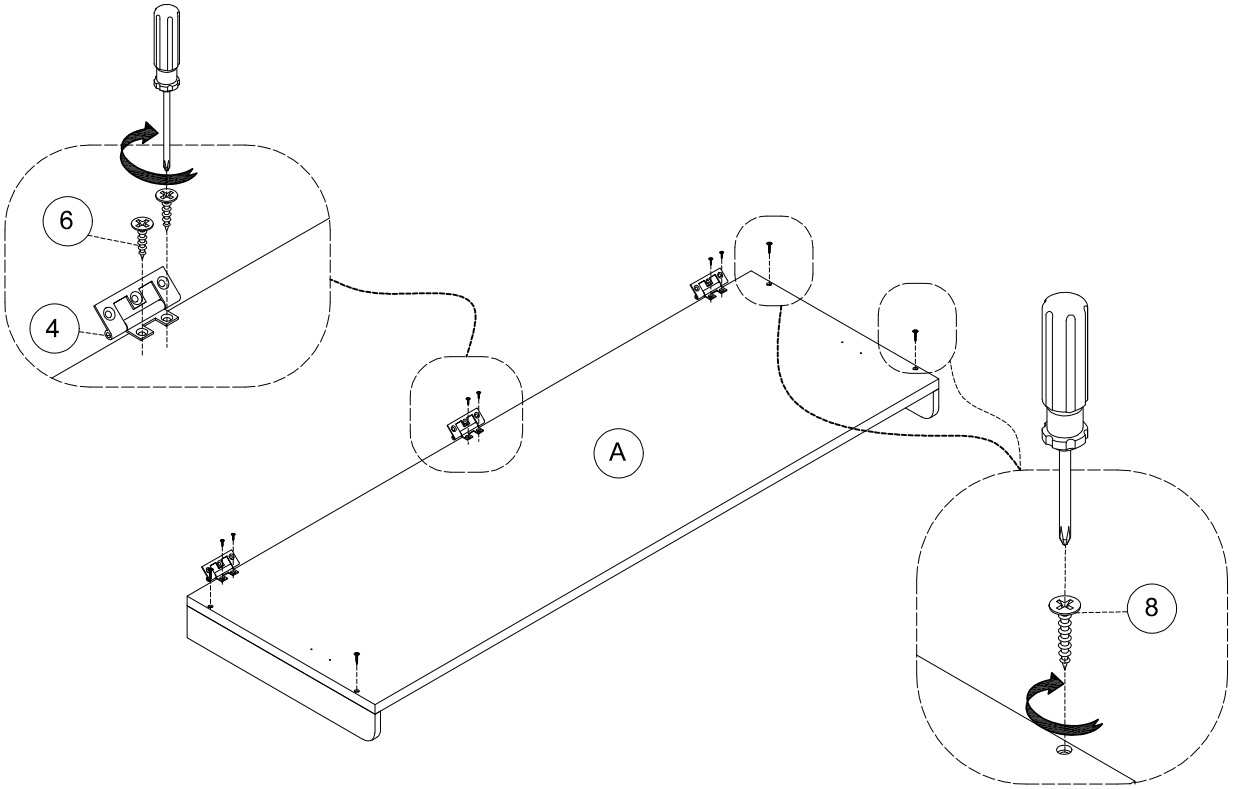

1	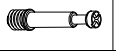	8

STEP 4: Following below illustration

-Using hardware #1 connect with E

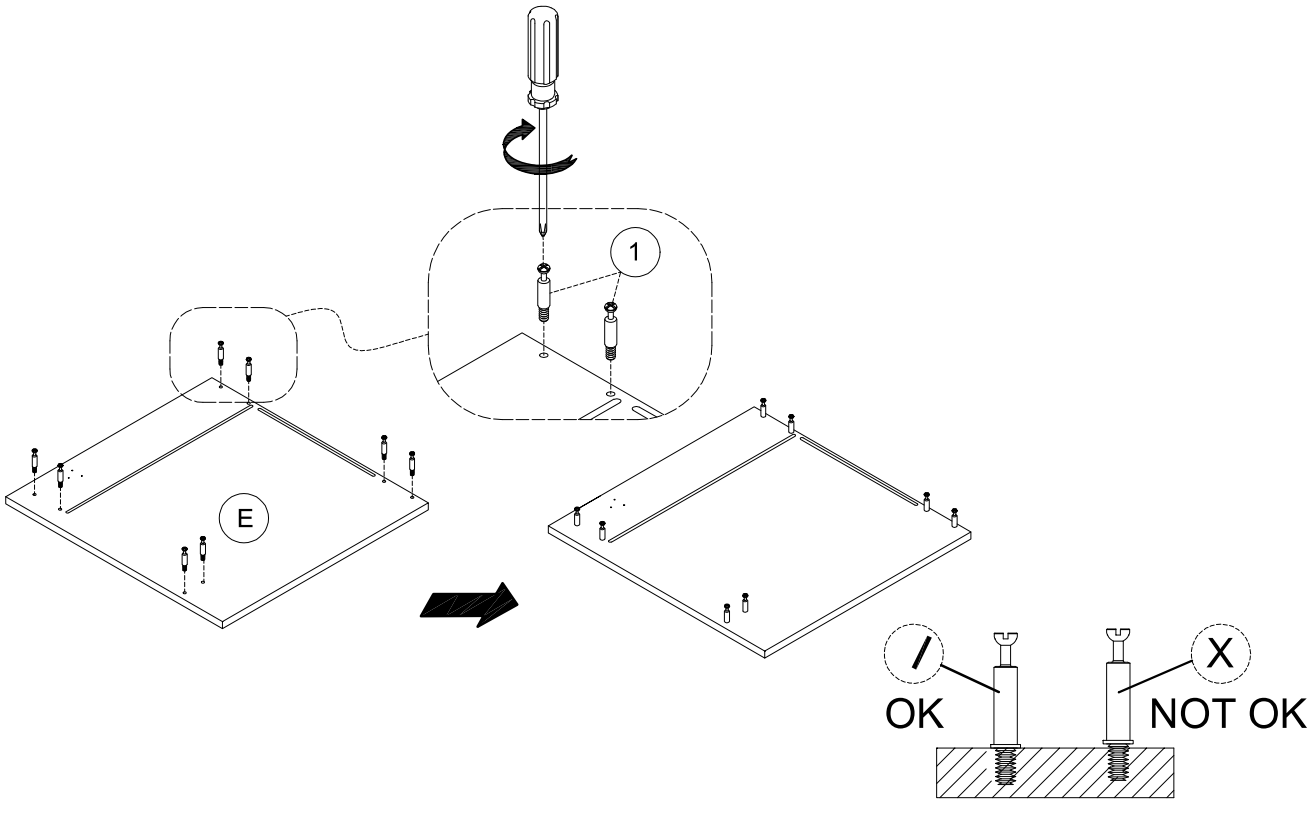

1		8

STEP 5: Following below illustration

-Using hardware #1 connect with F

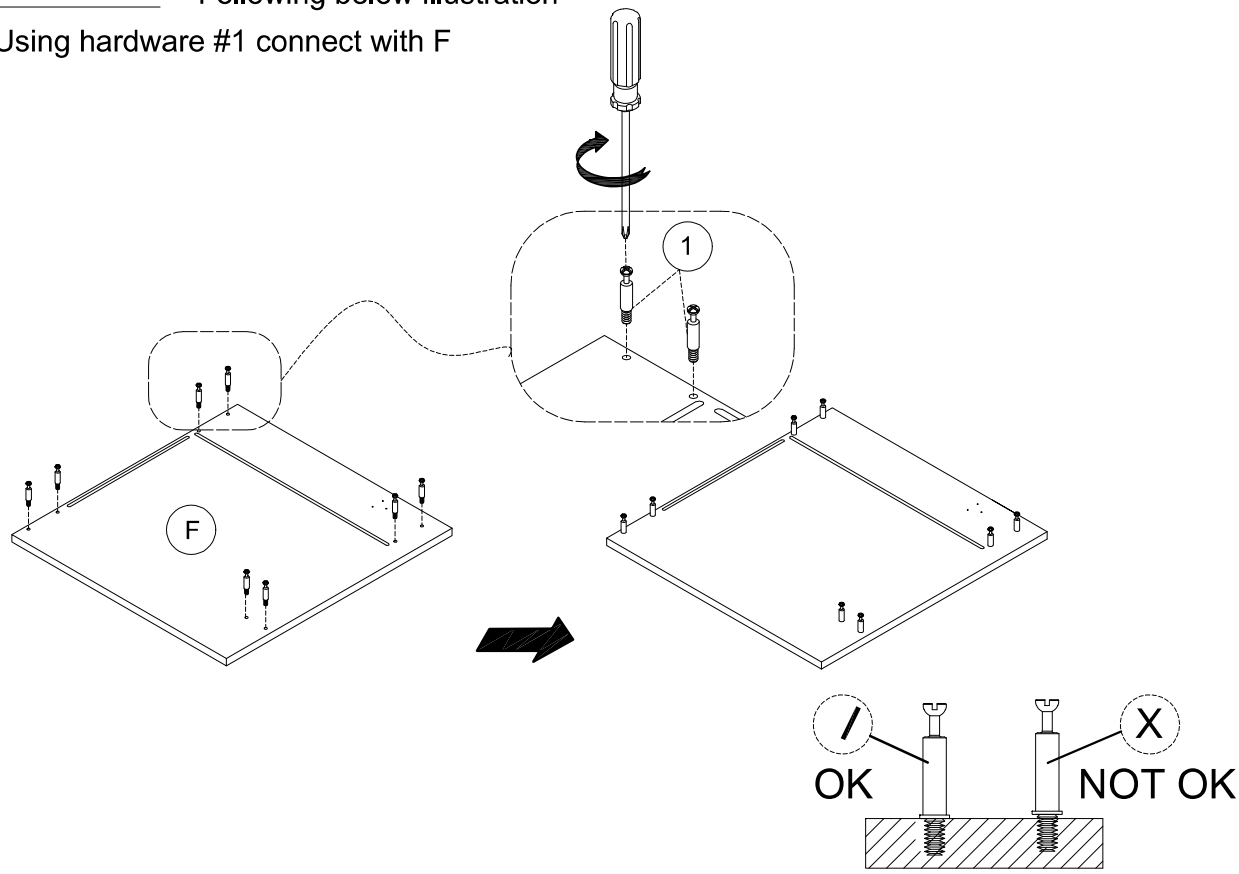

3		8

STEP 6: Following below illustration

-Using hardware #3 , connect G H with I J K

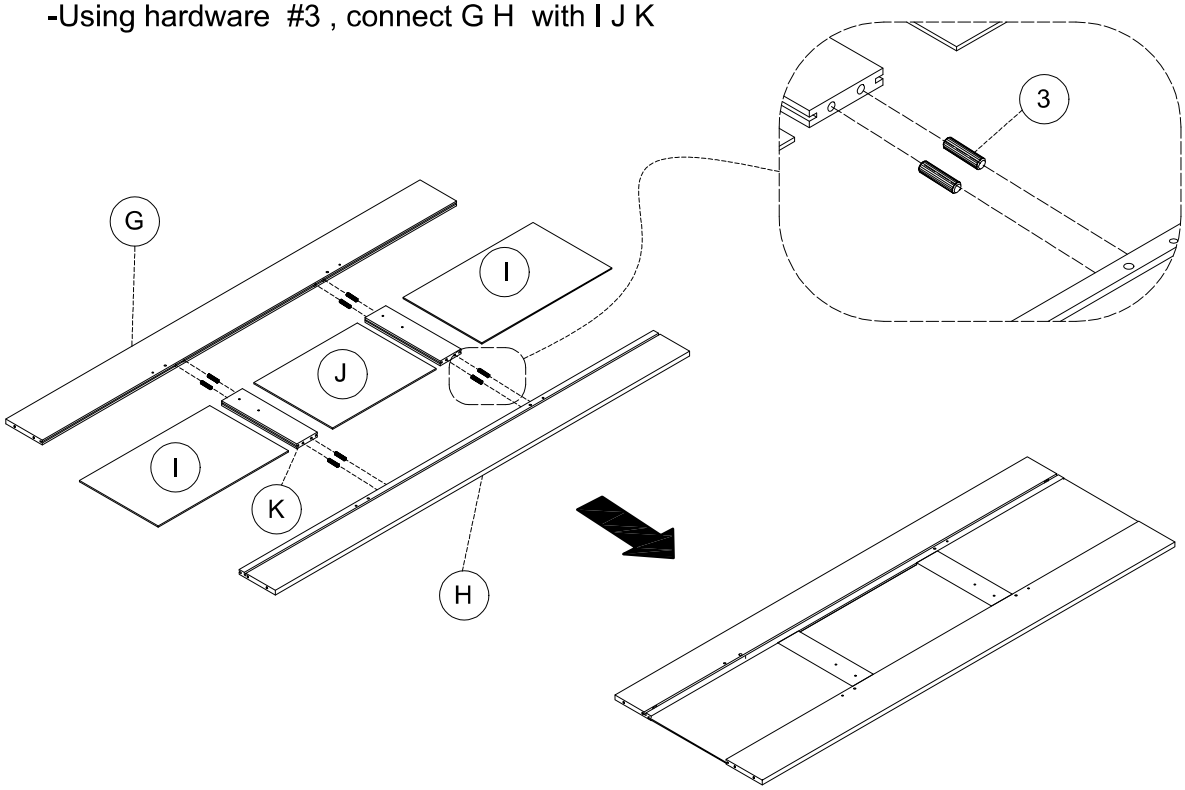

1	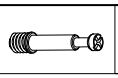	6

STEP 7 : Following below illustration

-Using hardware #1 ,connect Step 6

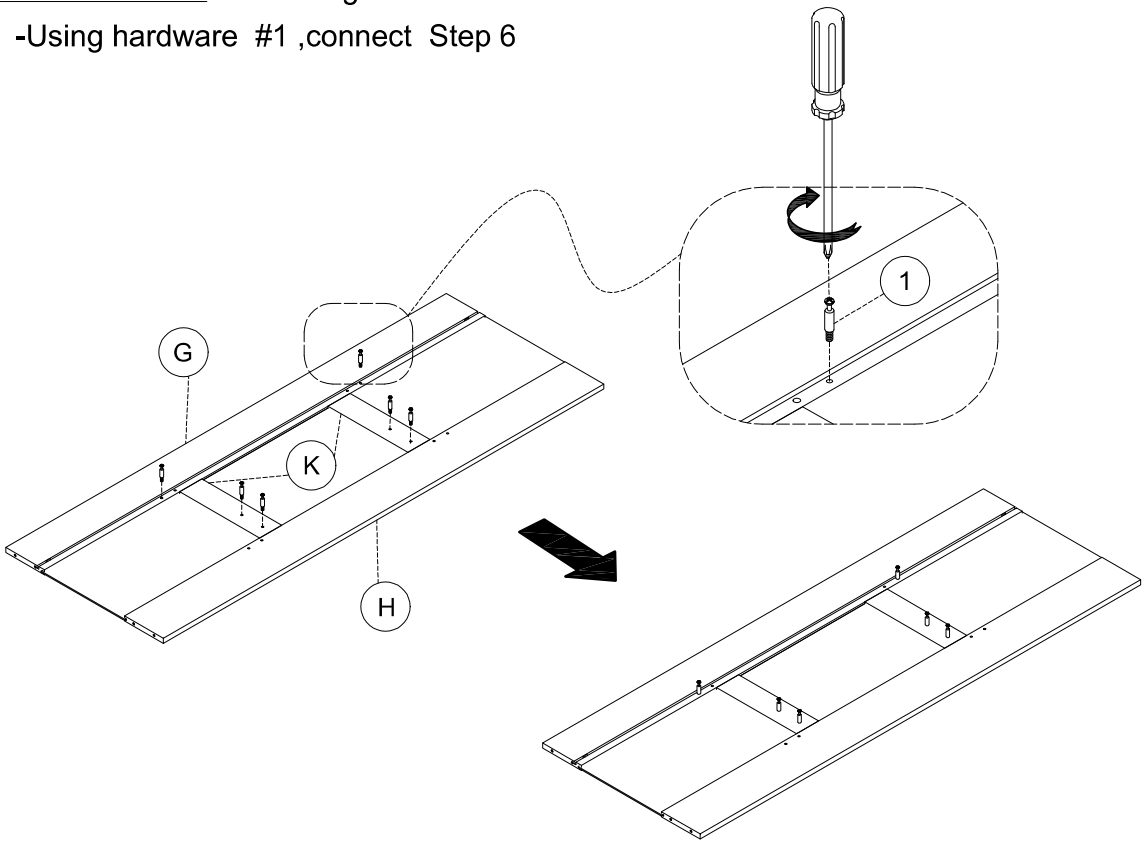

2		4

STEP 8: Following below illustration

-Using hardware #2 connect Q with Step 7

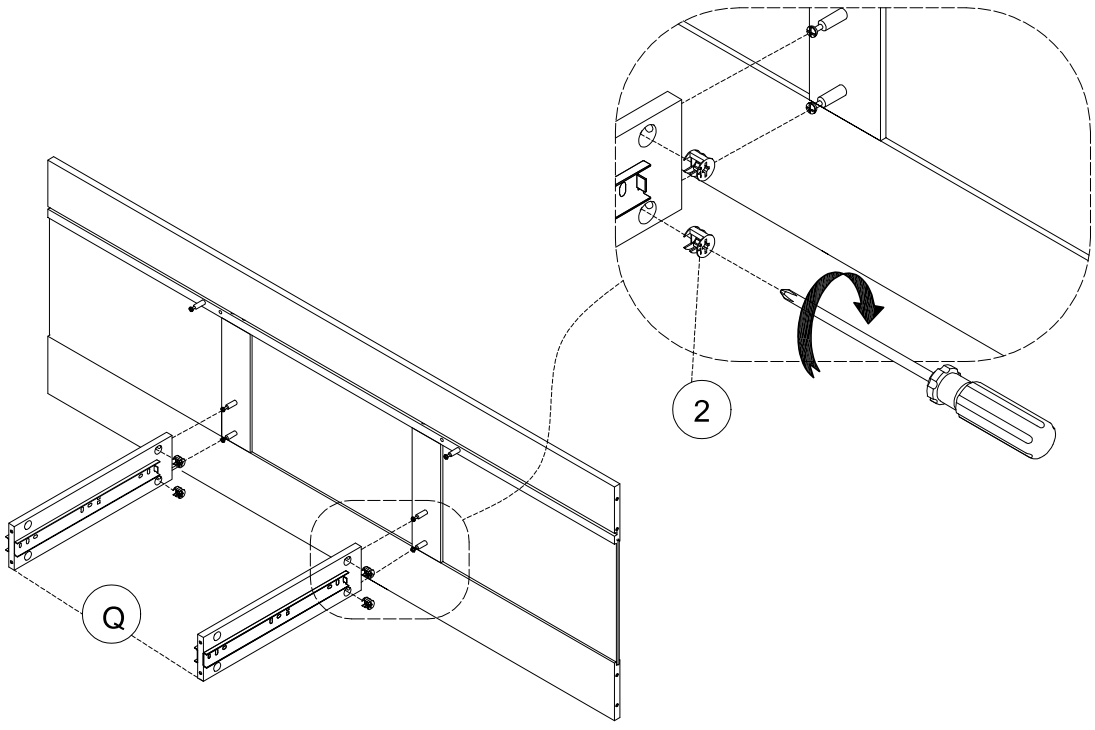

2		2
3	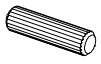	2

STEP 9 : Following below illustration

-Using hardware #2 ,#3 connect M with Step 8

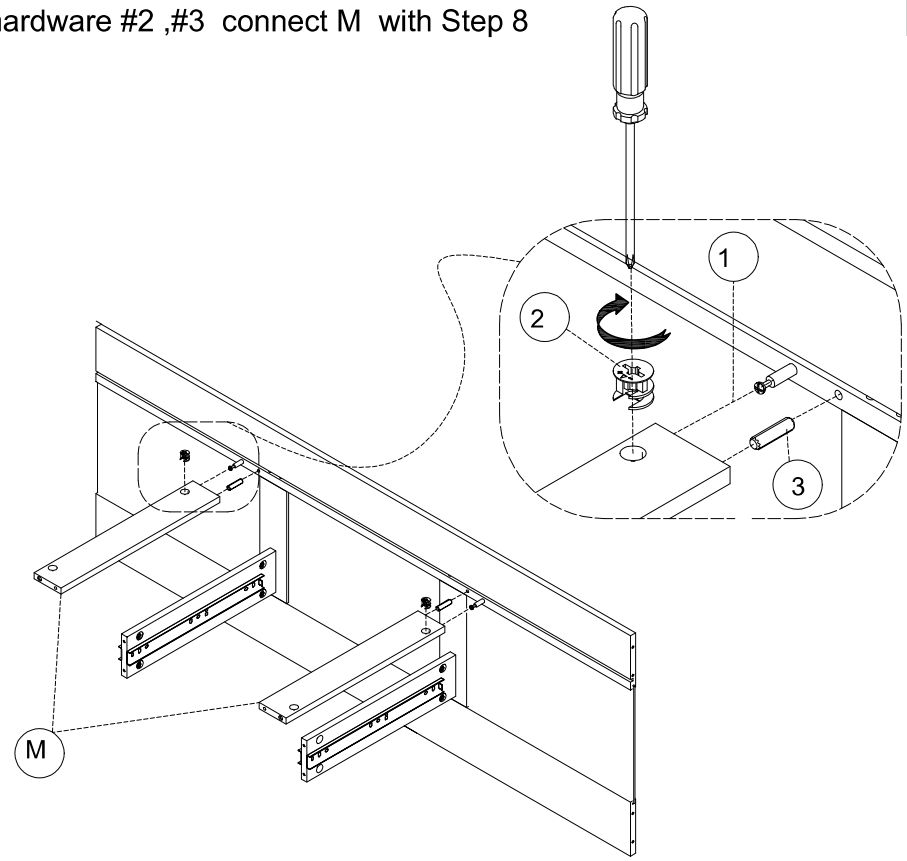

1	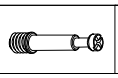	6

STEP 10: Following below illustration

-Using hardware #1 , connect with P,N.

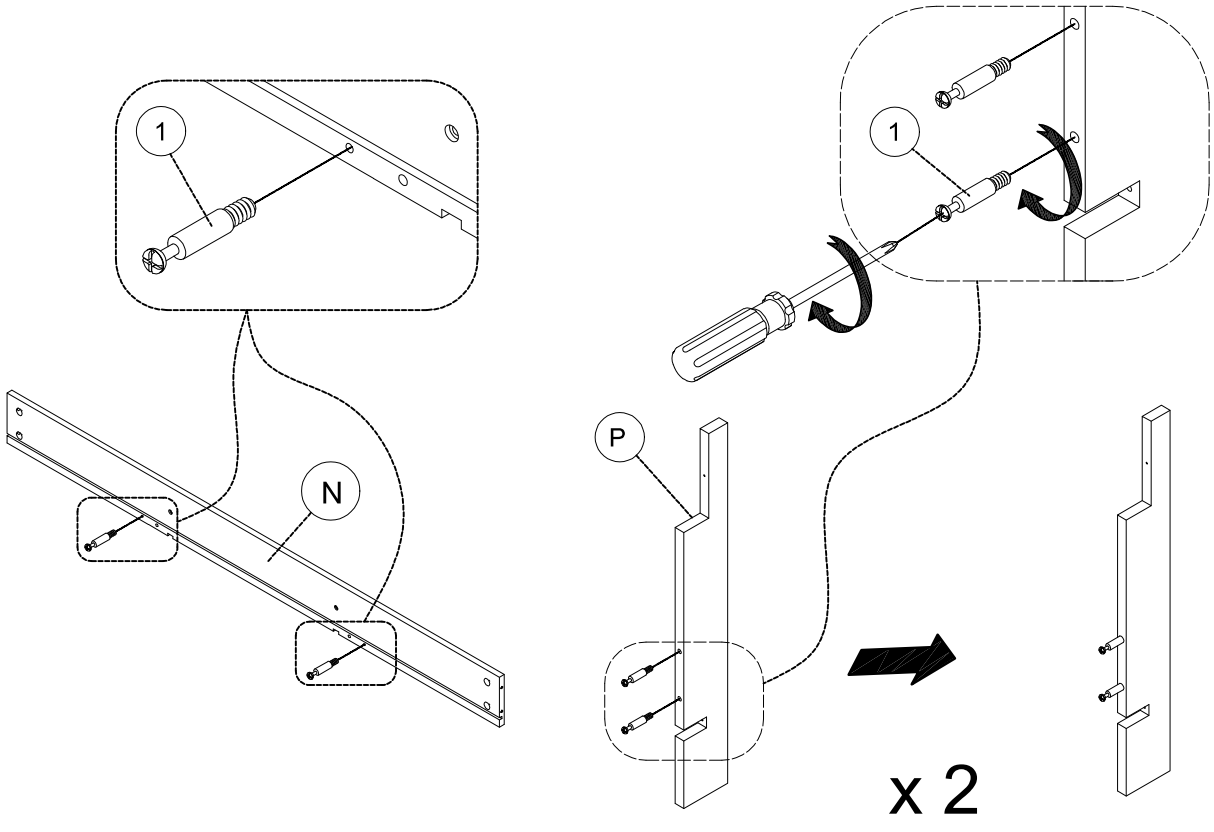

8		2	9		2

STEP 11 : Following below illustration

-Using hardware #8 , #9 , connect N,O with Step 10

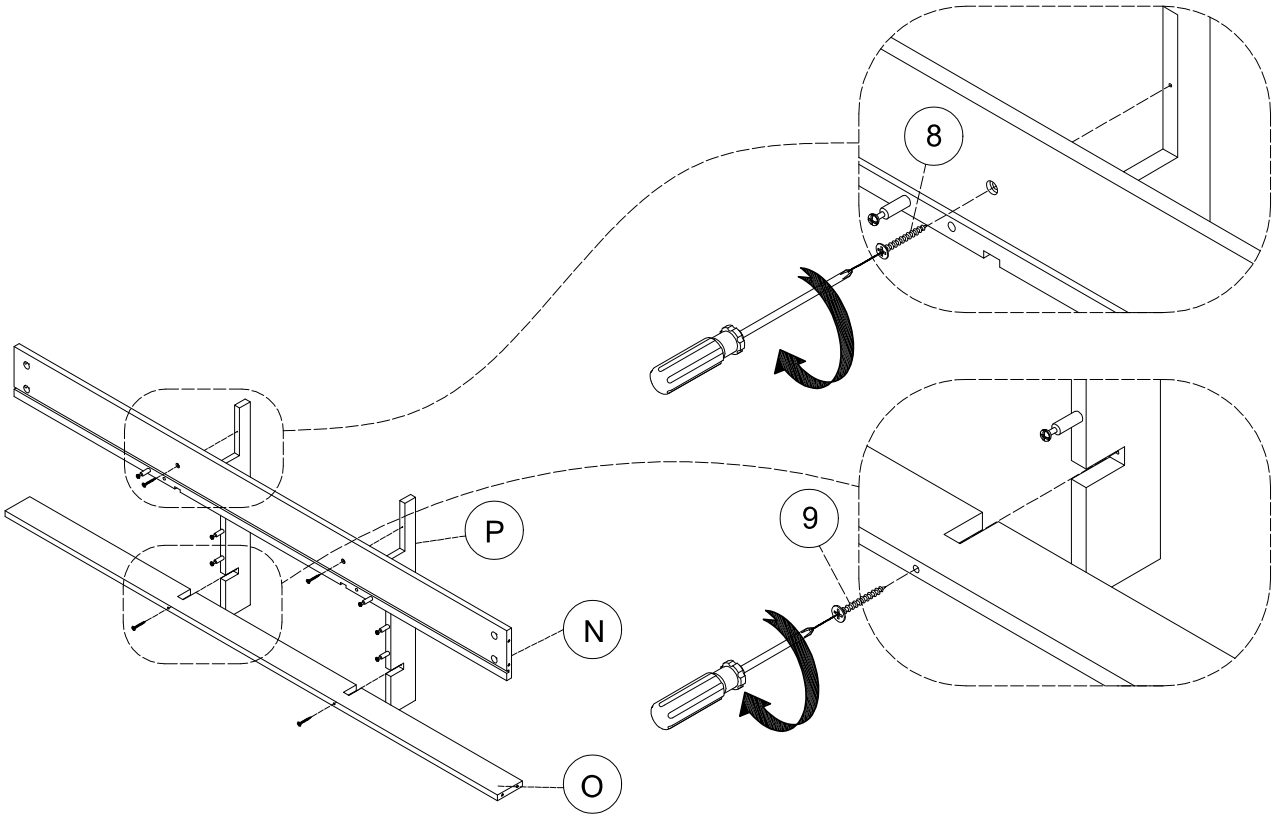

2		6
3		2

STEP 12 : Following below illustration

-Using hardware #2,#3 connect step 9 with step 11

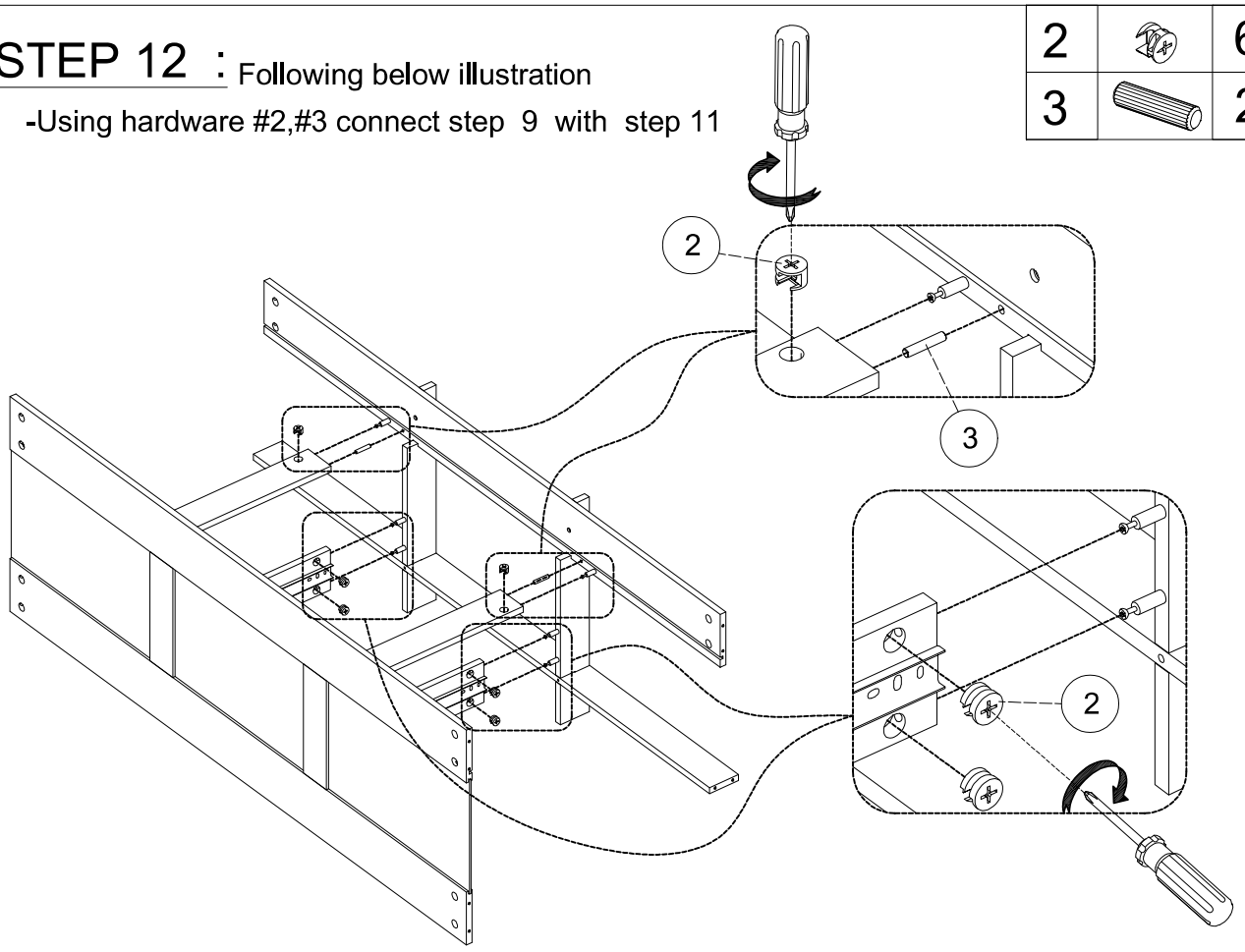

2		8

STEP 13 : Following below illustration

-Using hardware #2 connect step 12

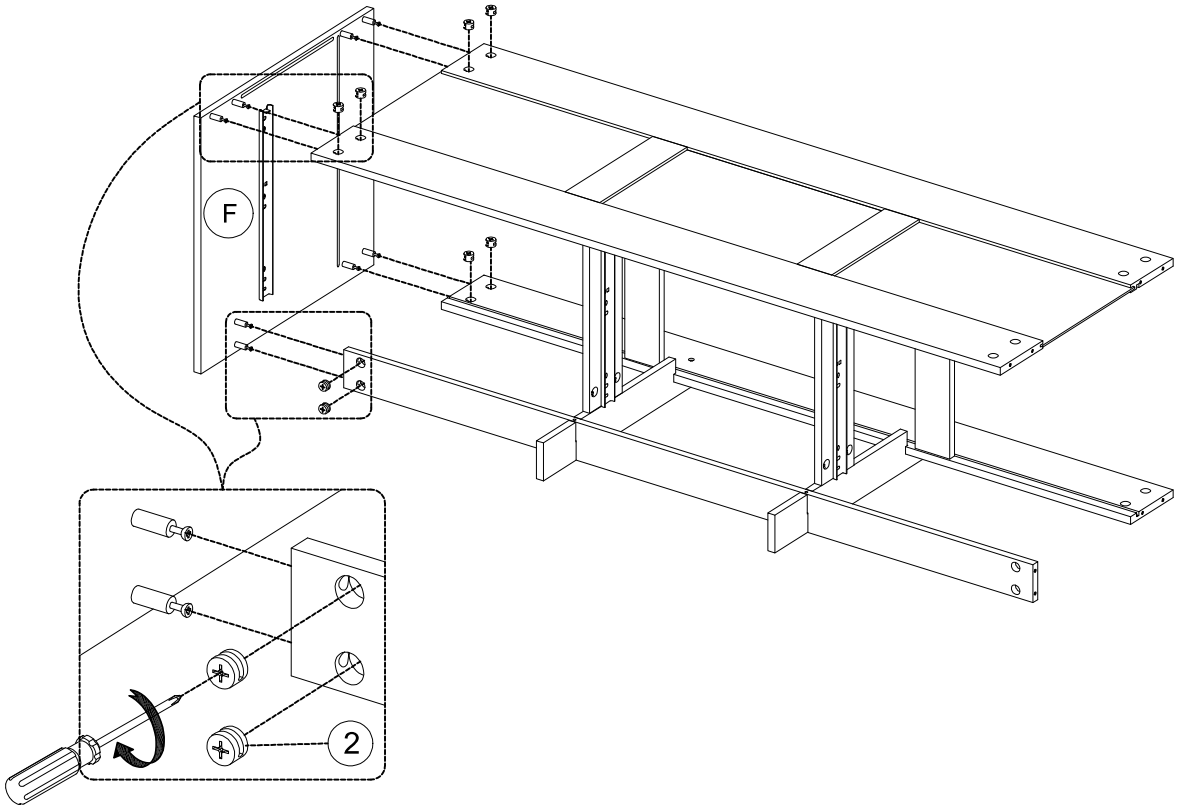

STEP 14 : Following below illustration

-Using Seat Box Bottom Panel L connect step 13.

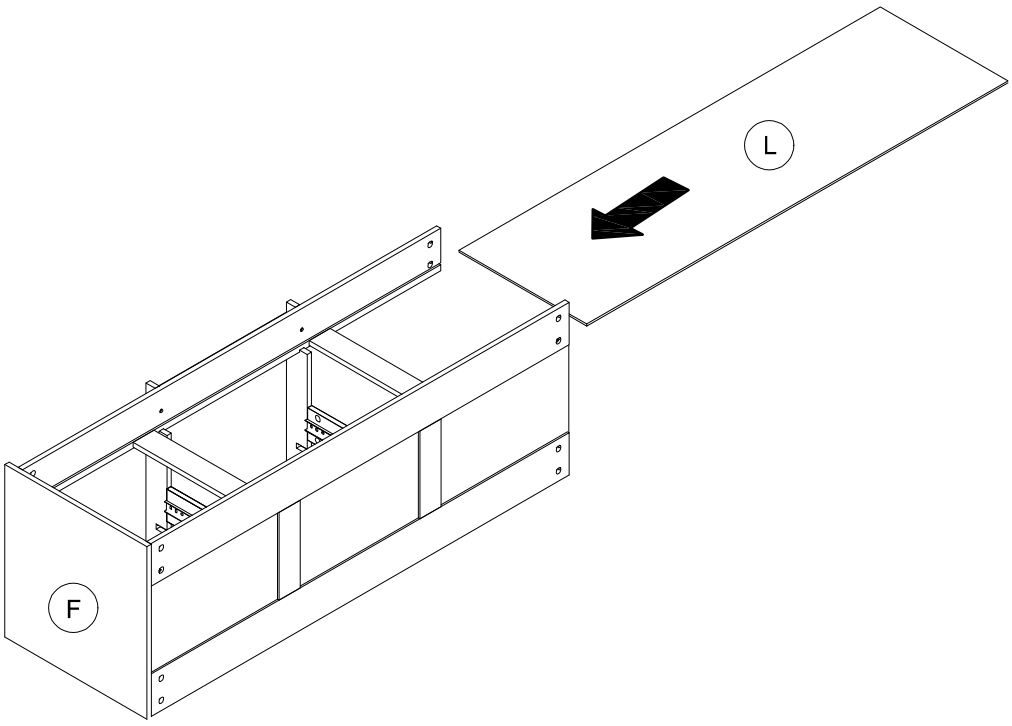

2		8

STEP 15 : Following below illustration

-Using hardware #2 , connect L with step 12.

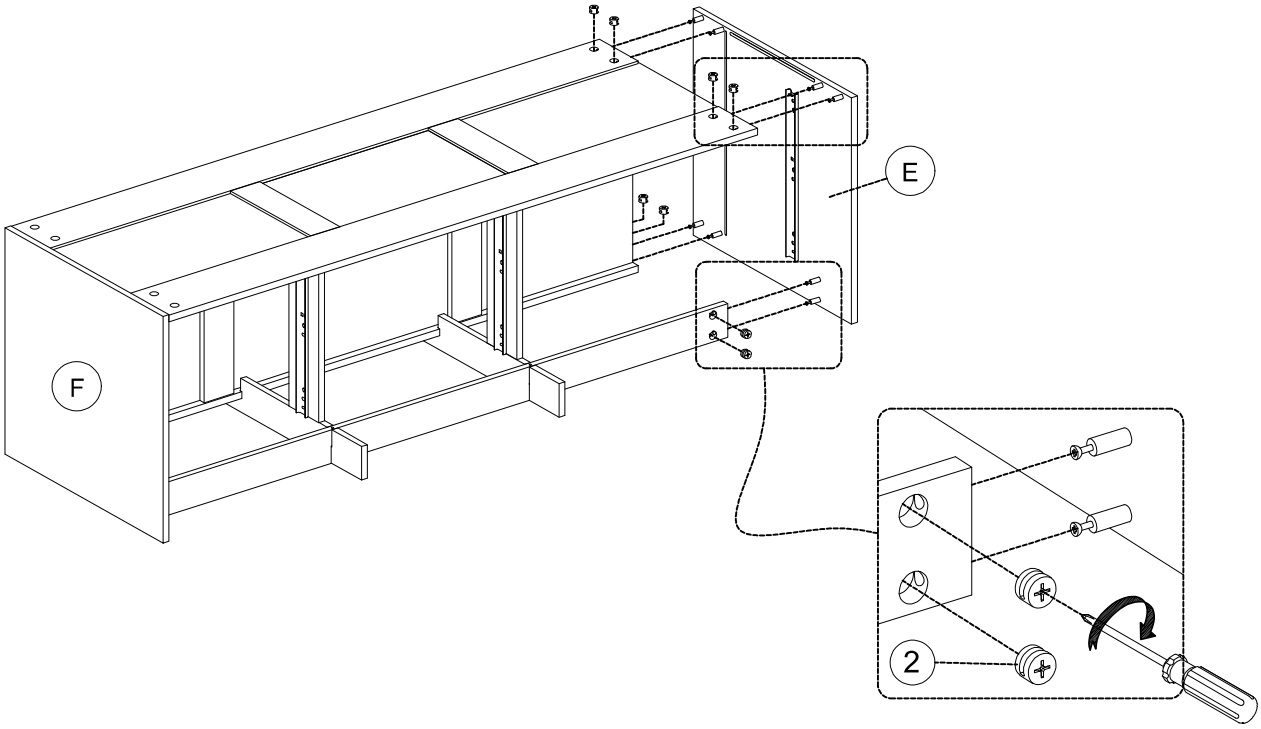

13		2	5		2
			6		10

STEP 16 : Following below illustration

-Using hardware #5,#6 connect with step 15.
-Using hardware #6 connect #13 with step 15.

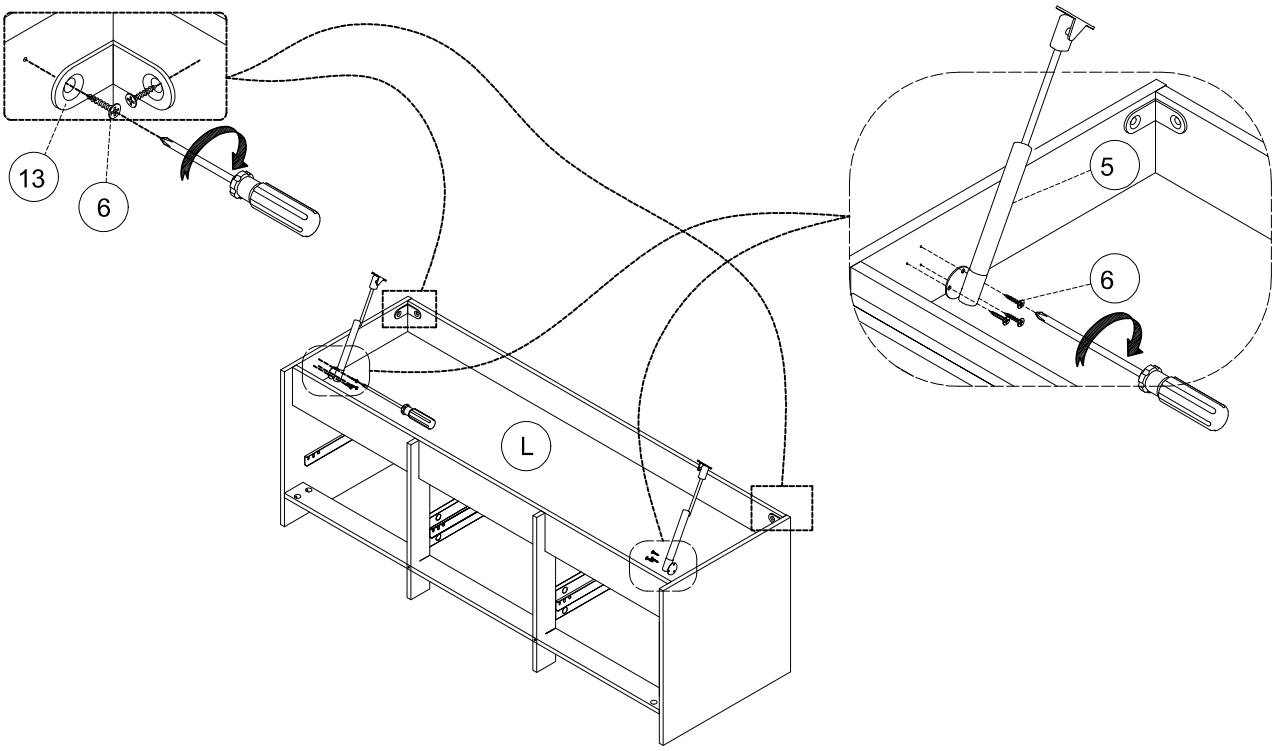

6		9

STEP 17 : Following below illustration

-Using hardware #6 connect step 2 with step 16.

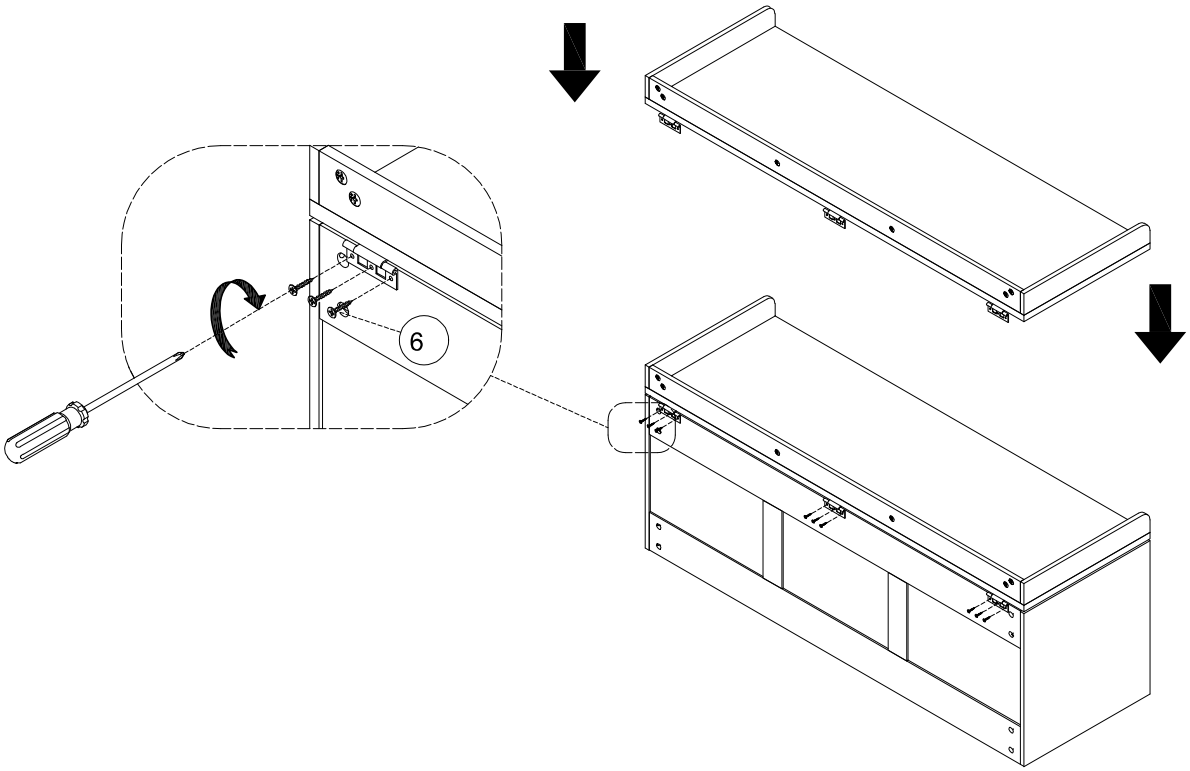

6		4

STEP 18 : Following below illustration

-Using hardware #6 connect hardware #5 with step 17.

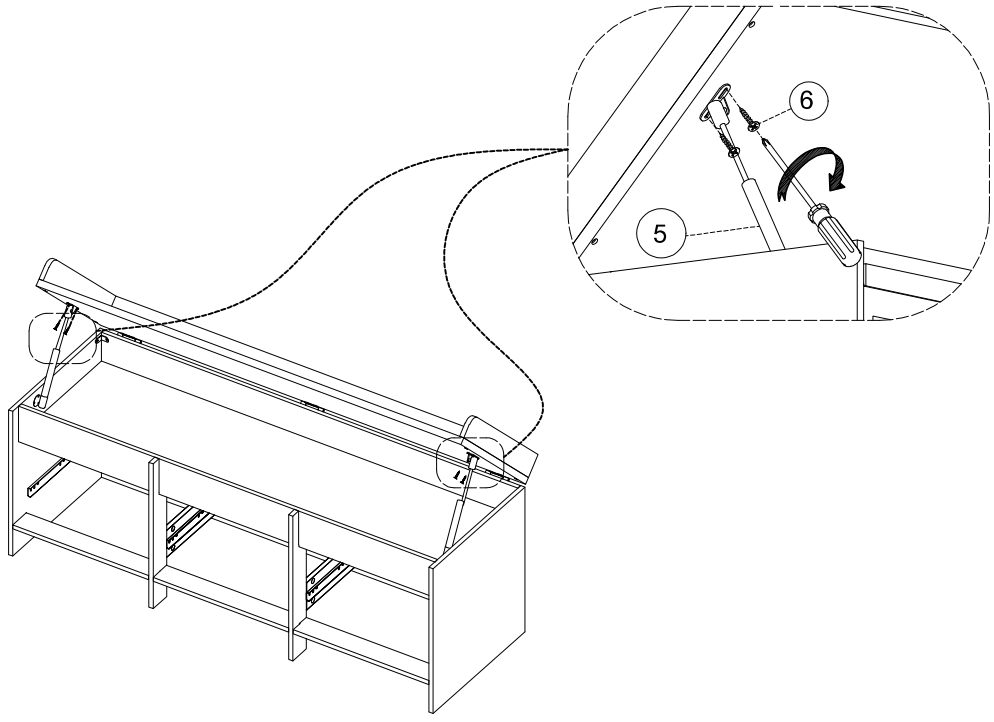

11		8

STEP 19 : Following below illustration

-Using hardware #10 connect with step 18.

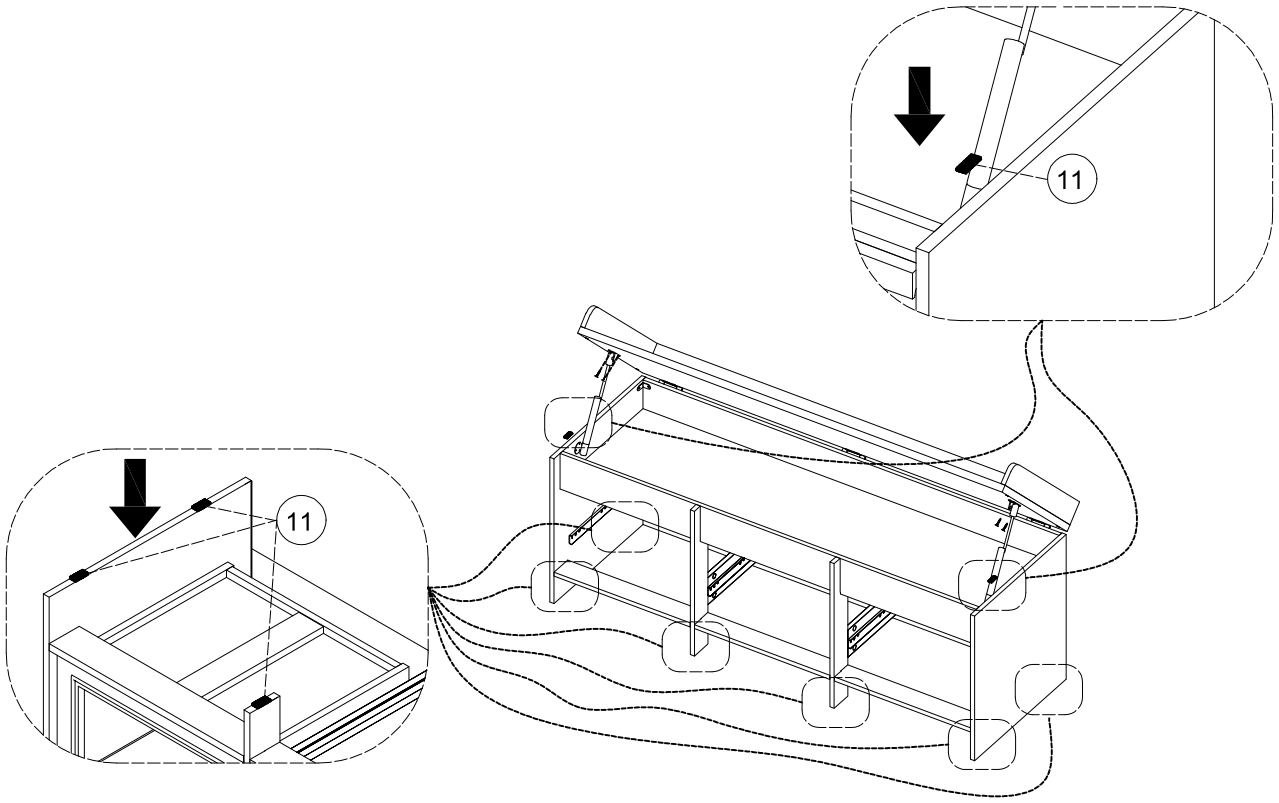

1		6

STEP 20 : Following below illustration

-Using hardware #1, connect #R

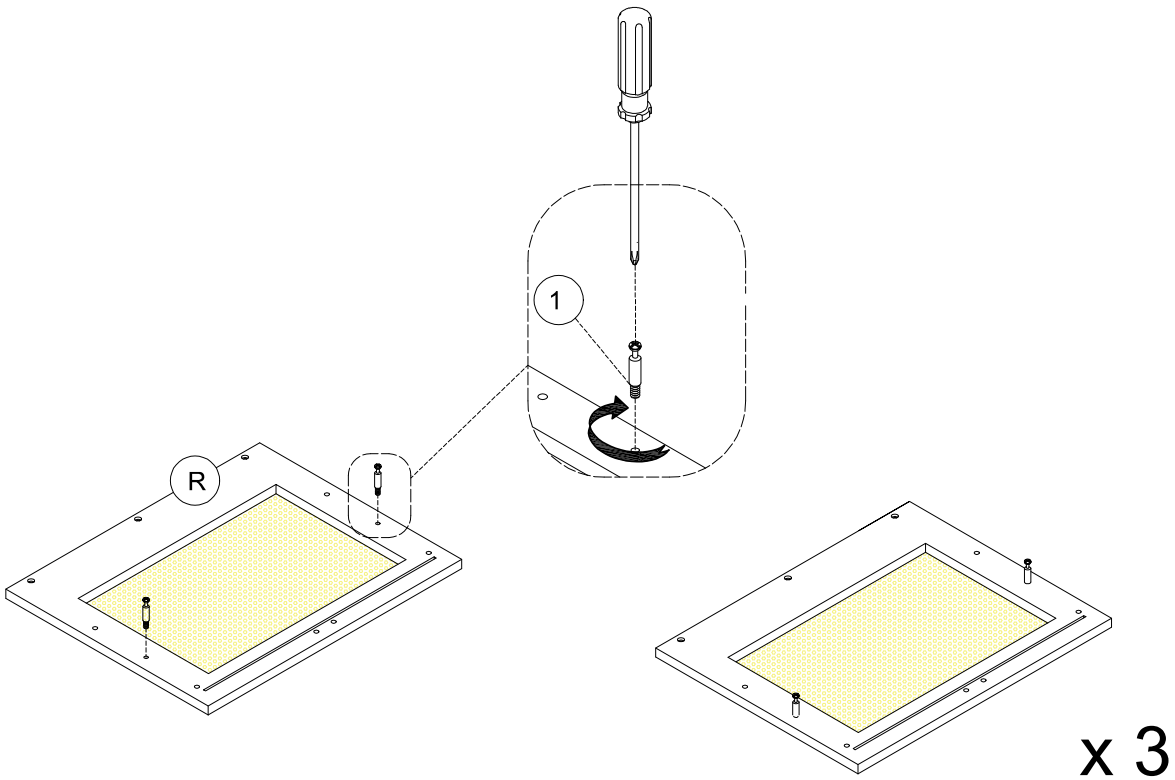

2		6	3		12

STEP 21 : Following below illustration

-Using hardware #2, #3 connect T, U with R.

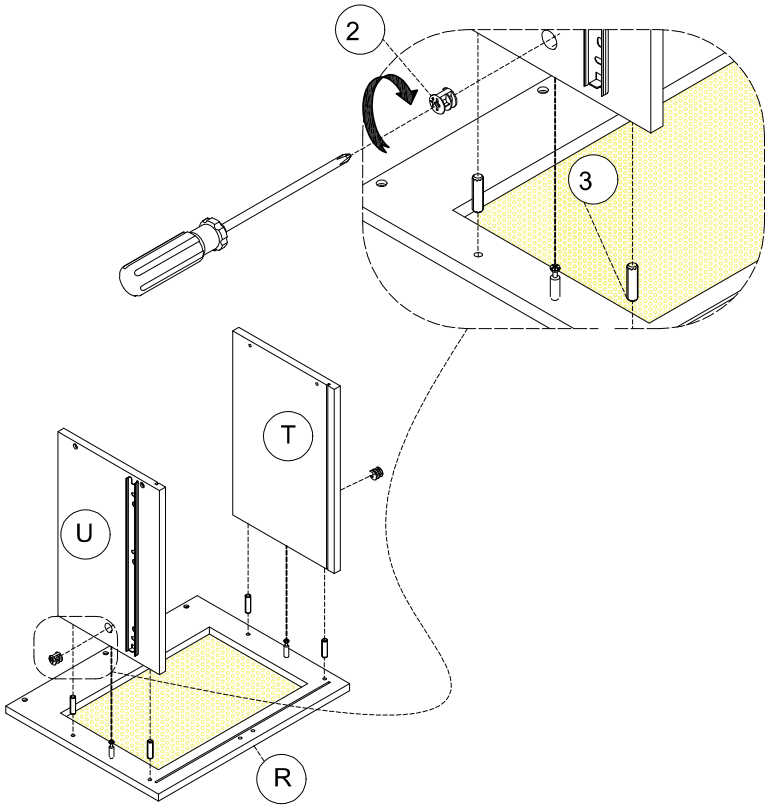

x 3

STEP 22 : Following below illustration

- Connect X with step 21.

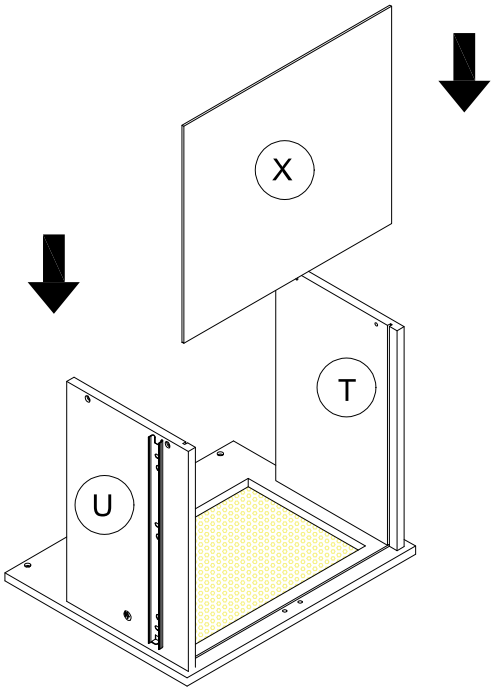

x 3

3	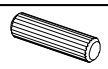	12

STEP 23 : Following below illustration

-Using hardware #3 connect W with step 22.

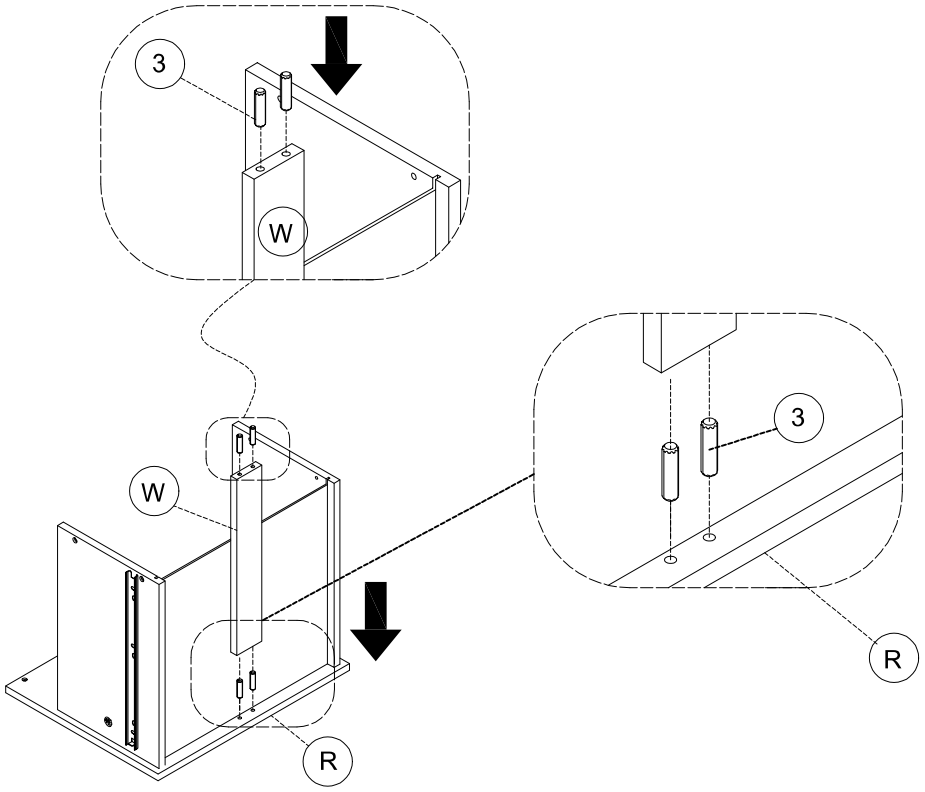

x 3

7		12
9		12

STEP 24 : Following below illustration

-Using hardware #7, #9 connect V with step 23.

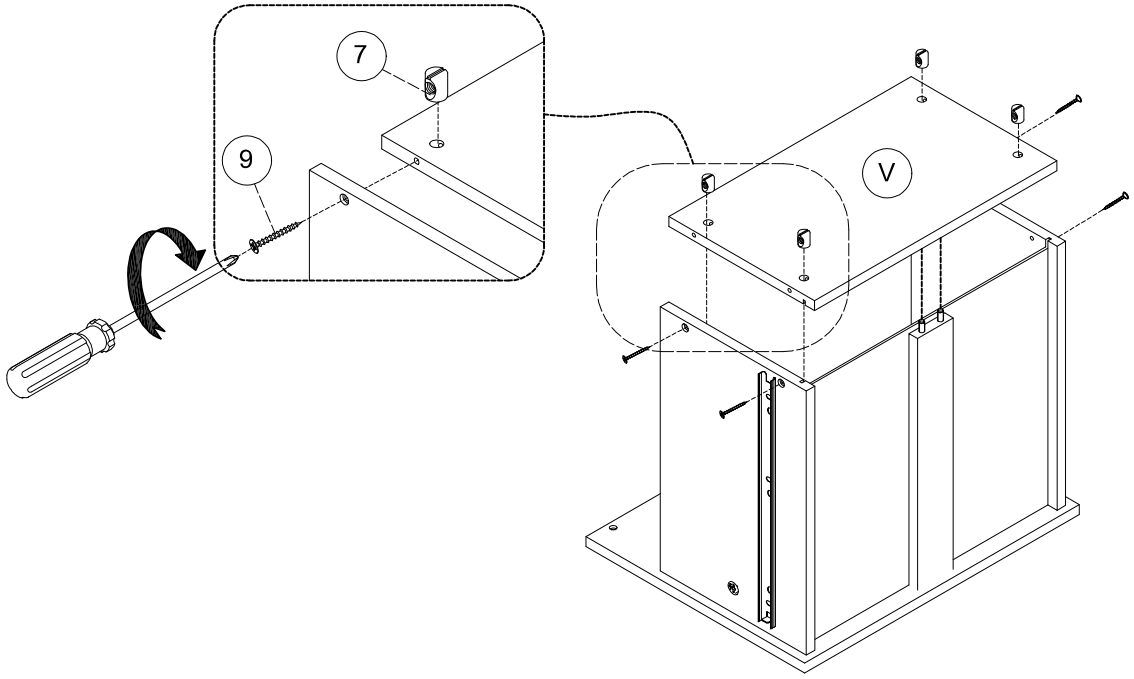

x 3

STEP 25 : Following below illustration

-Using hardware #12, #10 connect S with step 24.

12	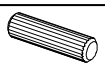	6
10		9

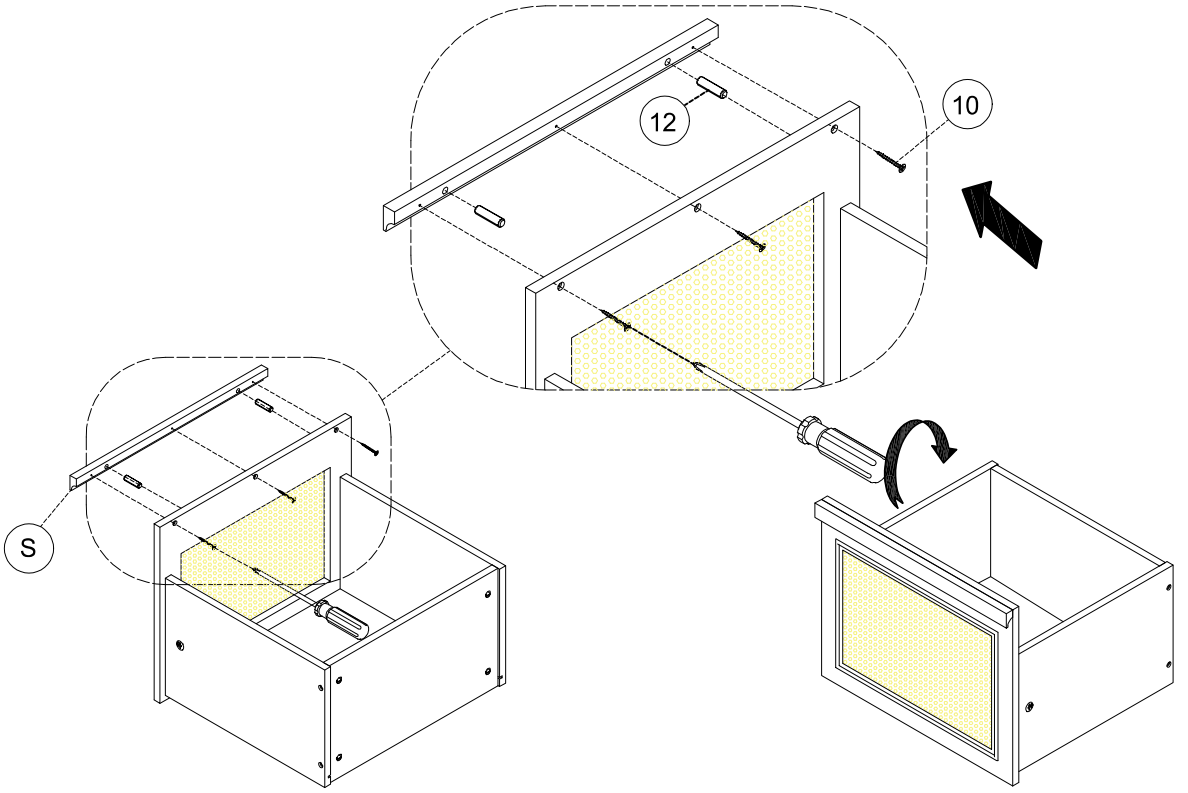

x 3

STEP 26 : Following below illustration

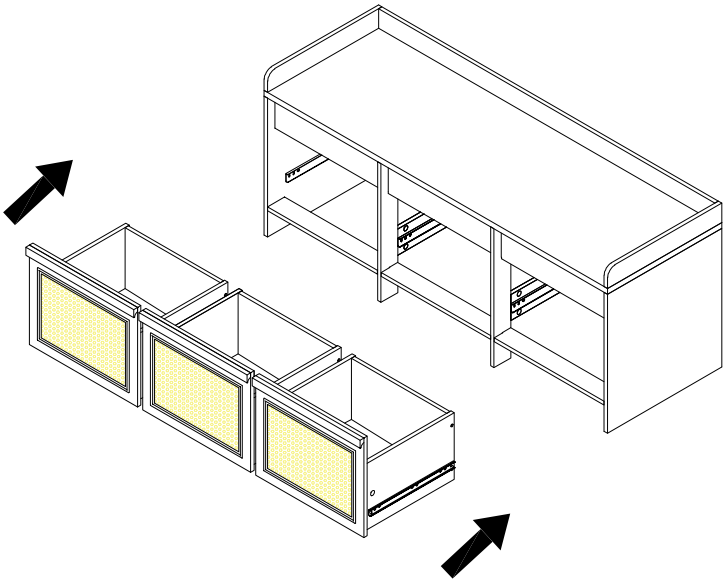

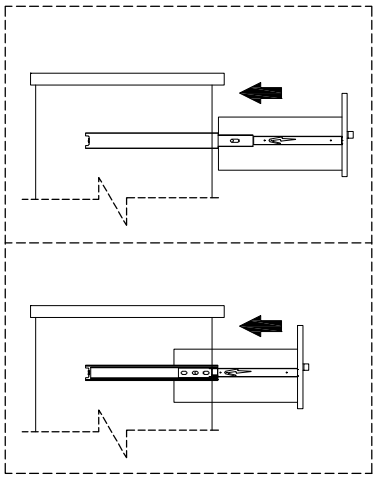

STEP 27 : Following below illustration

Y	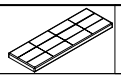	1

