User Manual

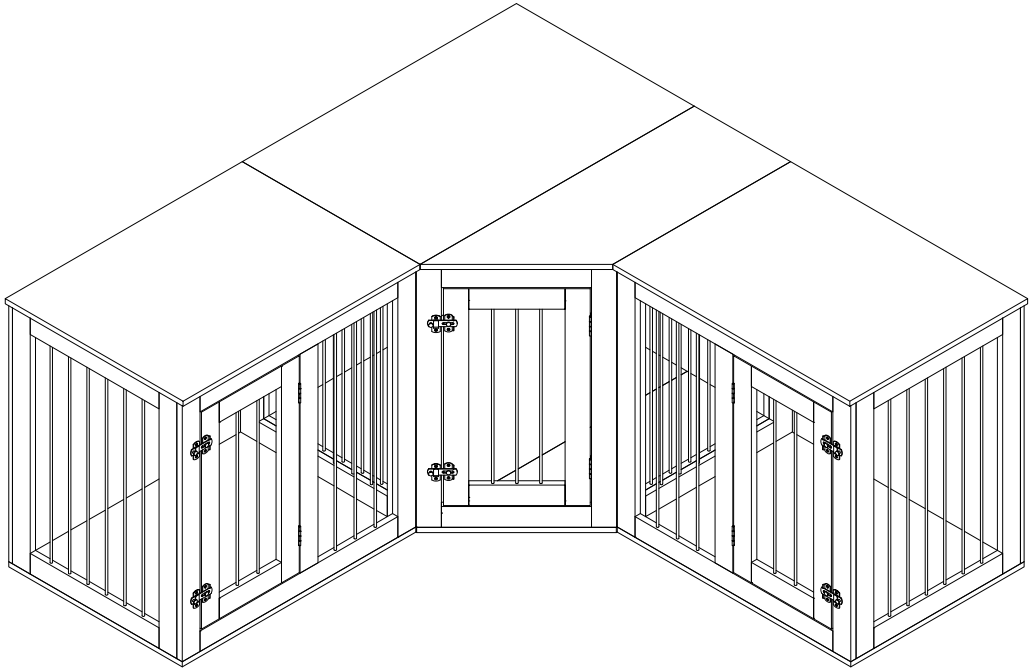

Accessories

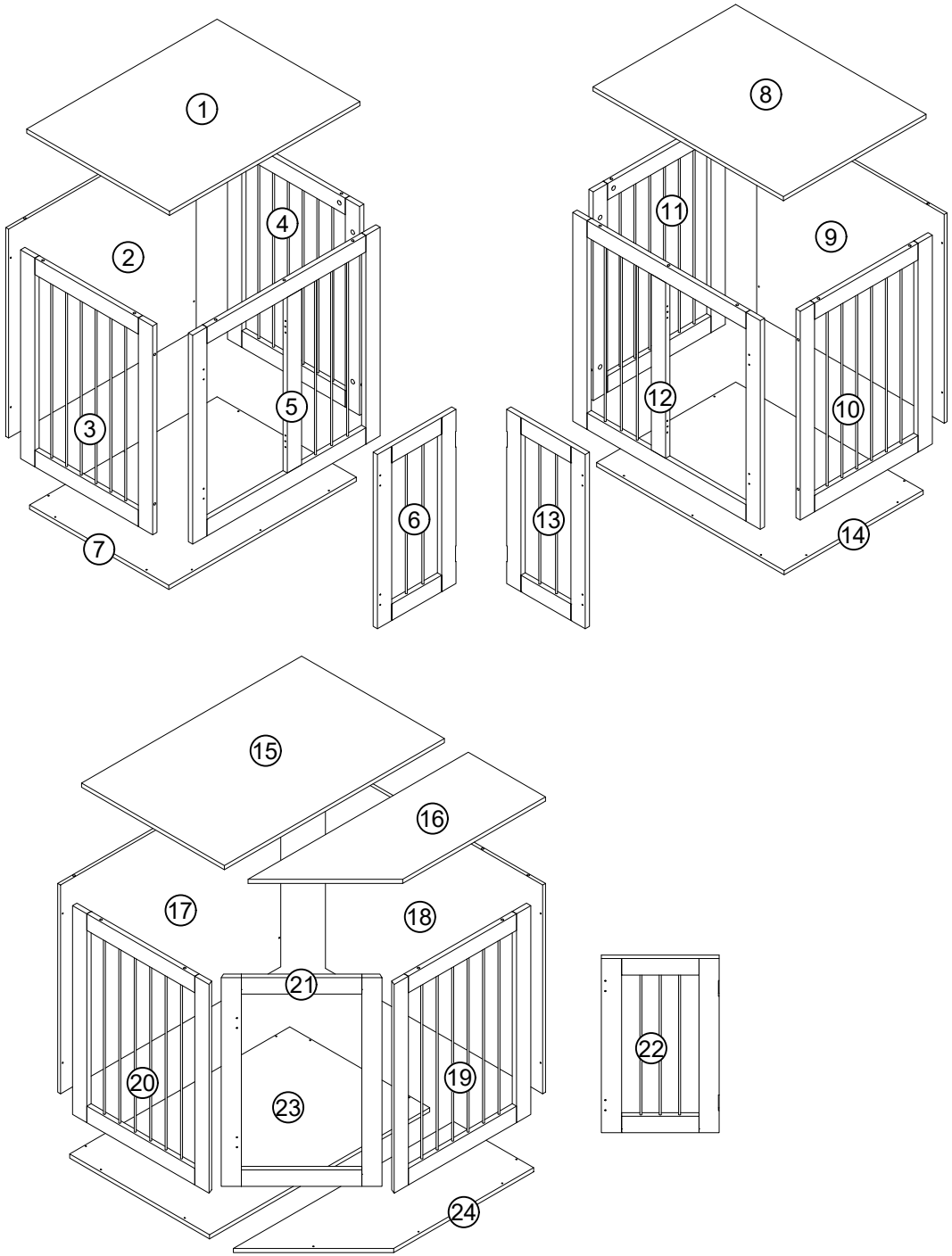

Accessories

A M6x35mm x39	B M15x10mm x39	C M3x16mm x39	D x10
E M6x35mm x3	F M7x50mm x46	G G-1 G-2 G-3 x6	H x18
I x1	J M3x14mm x24	K x6	L M3.5x12mm x12

Installation Steps

1

A	M6x35mm x14
C	M3x16mm x1
E	M6x35mm x1

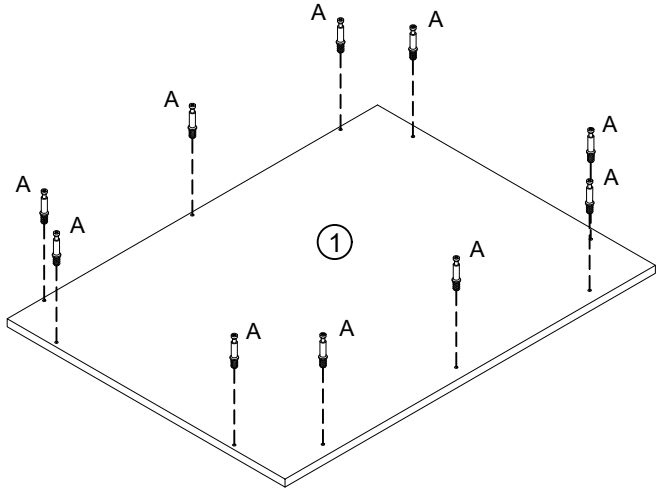

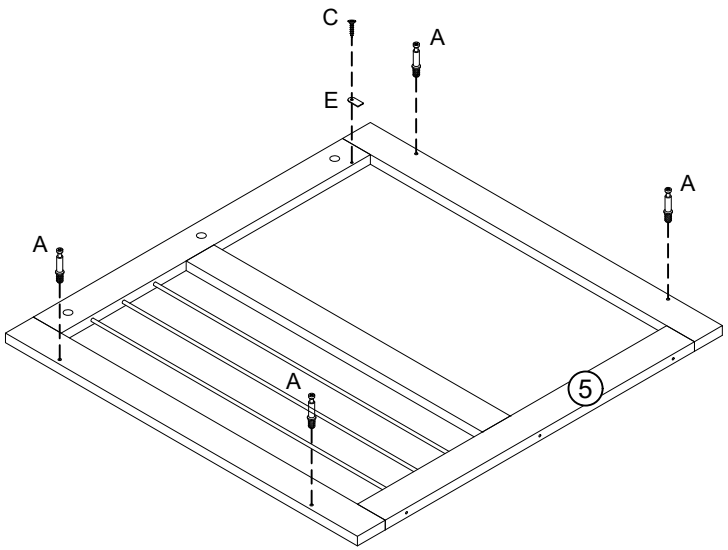

2

B	M15x10mm x4
F	M7x50mm x4
I	x1

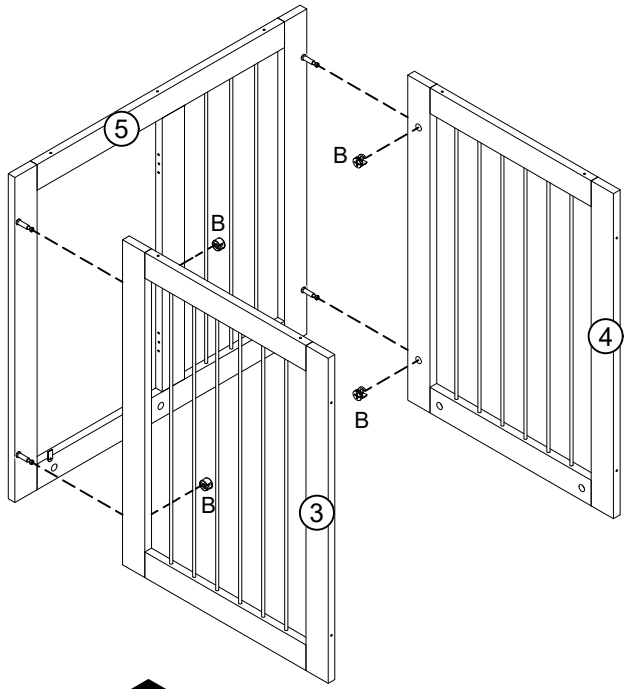

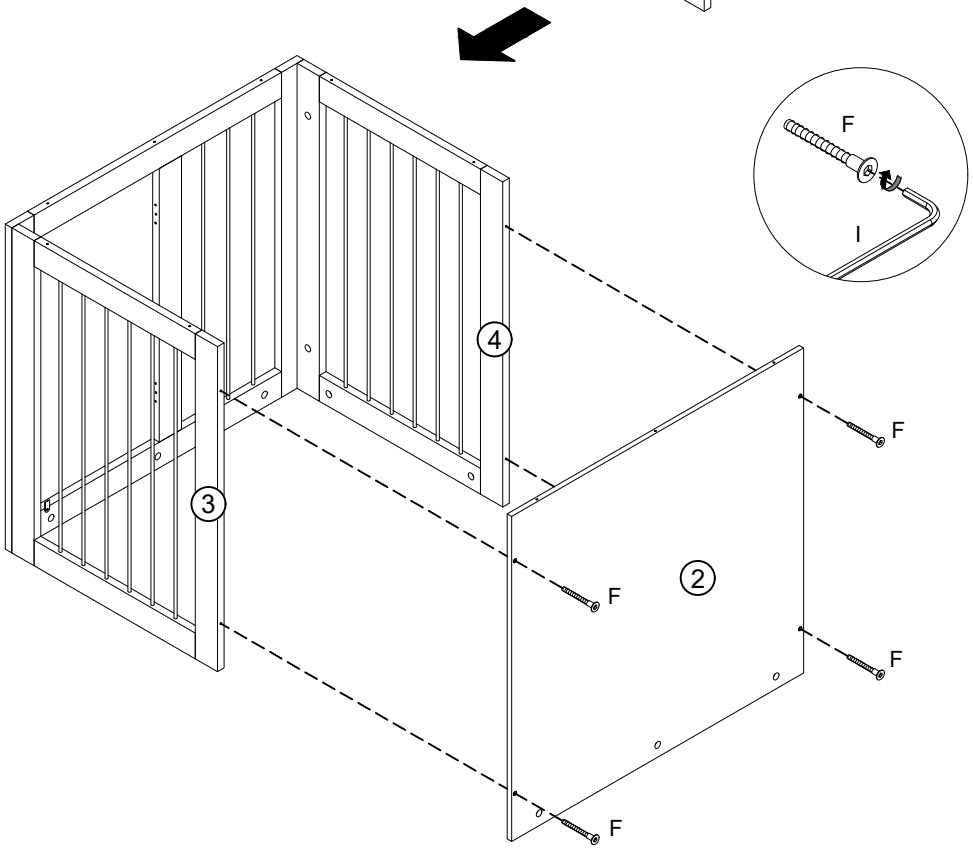

3

B	M15x10mm x10

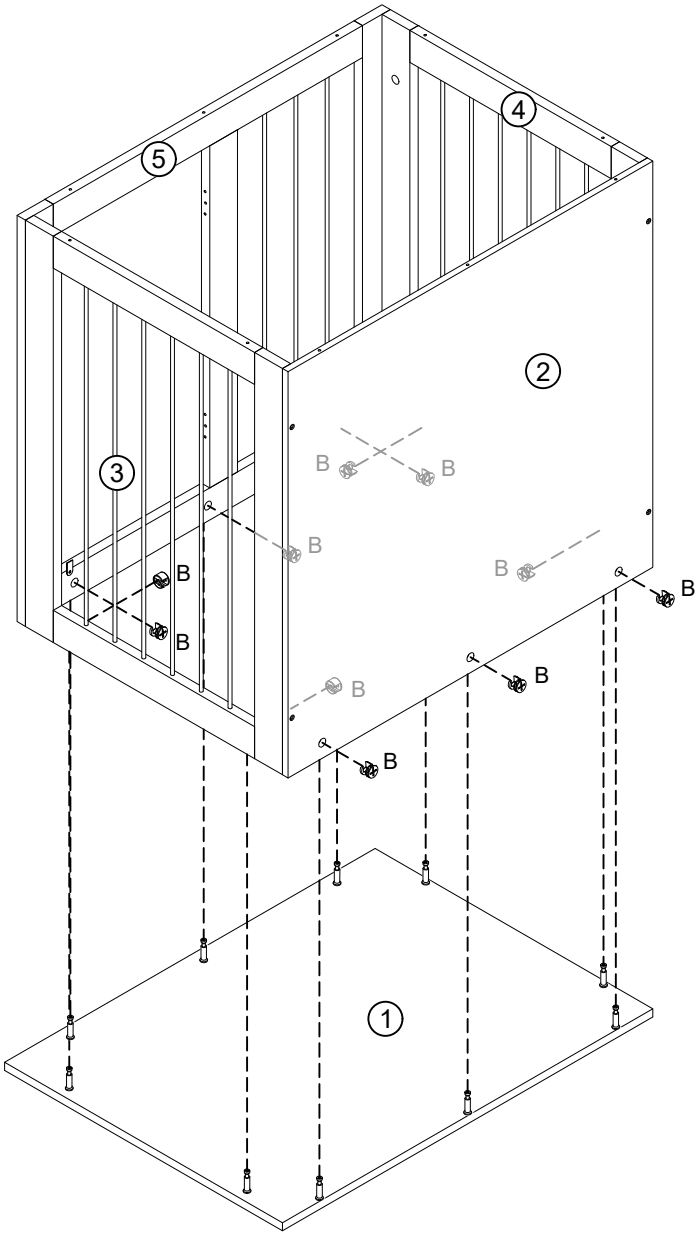

4

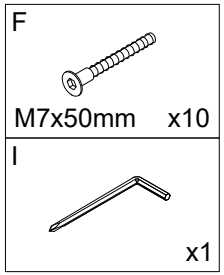

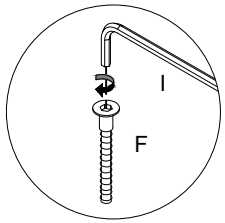

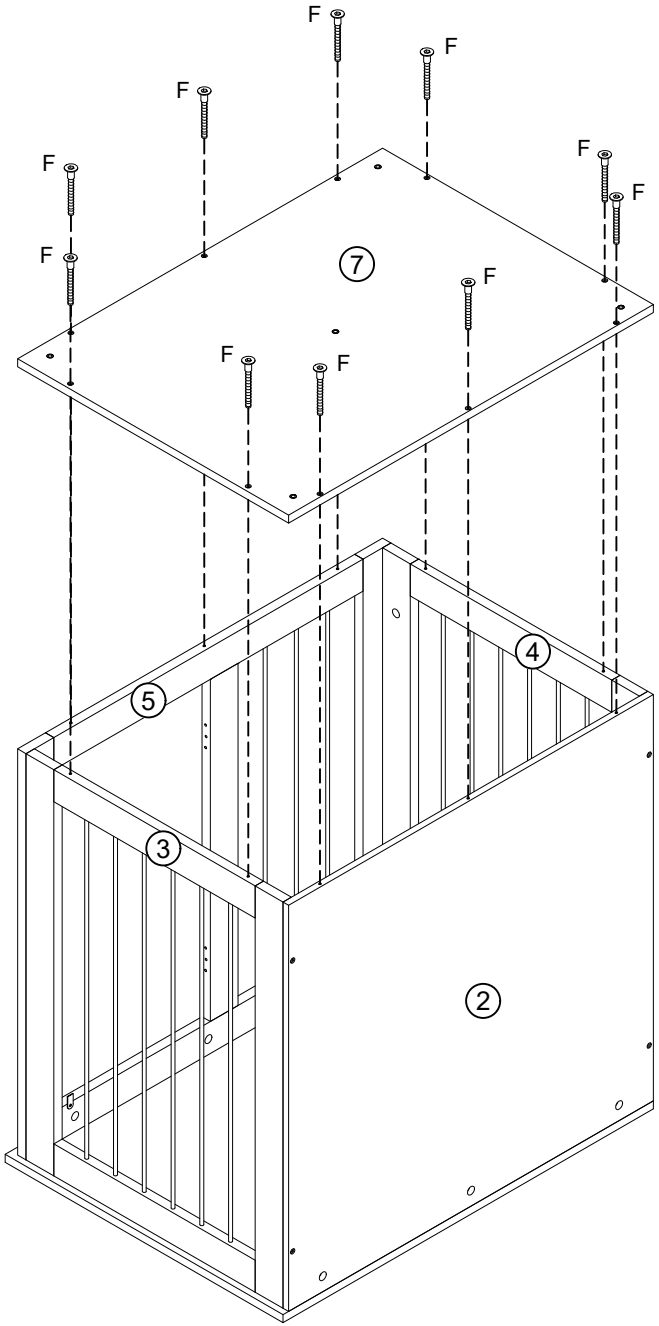

5

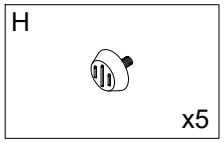

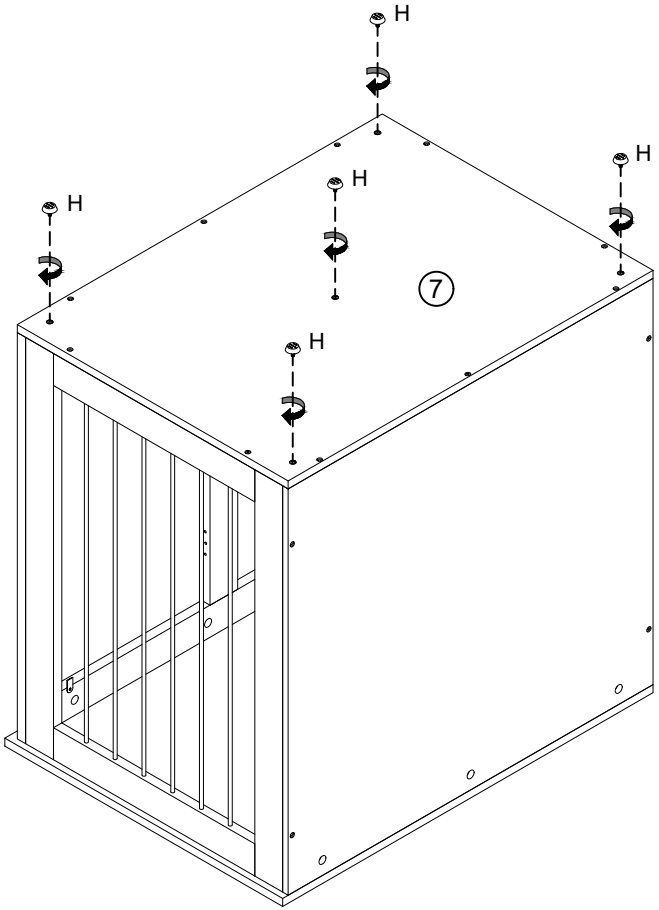

6

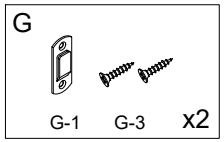
G
G-1
G-3
x2

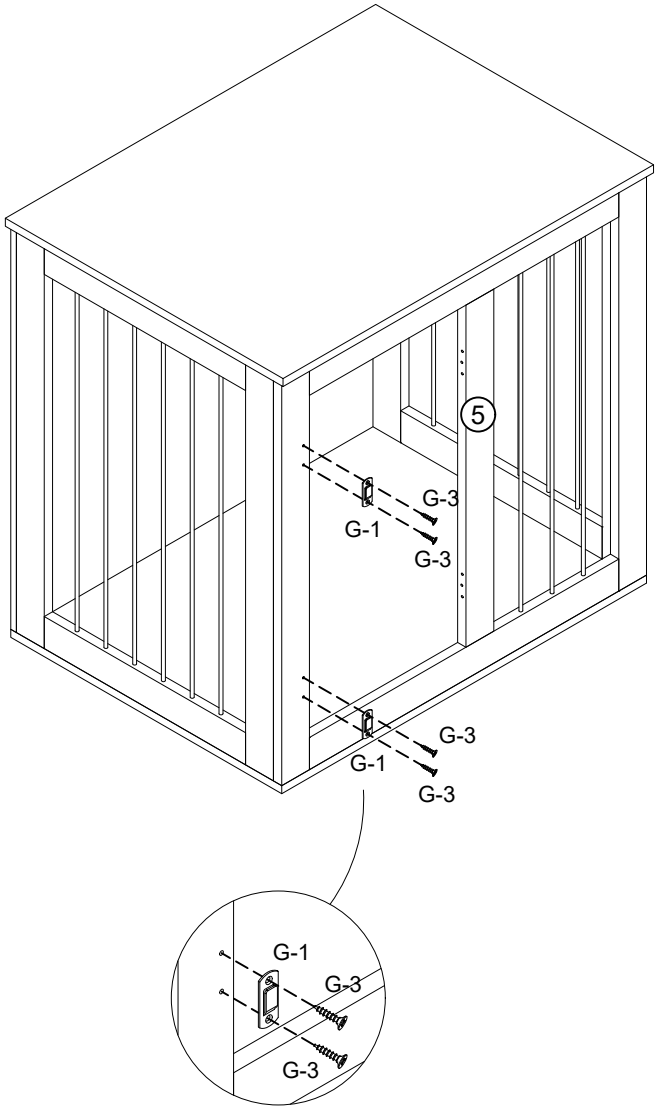
5
G-3
G-1
G-3
G-3
G-1
G-3
G-1
G-3
G-3

7

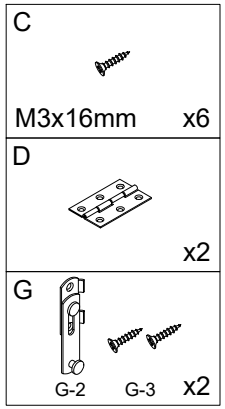
C
M3x16mm
x6
D
x2
G
G-2
G-3
x2

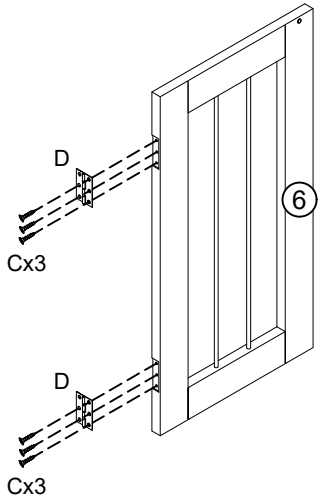
D
Cx3
6
D
Cx3

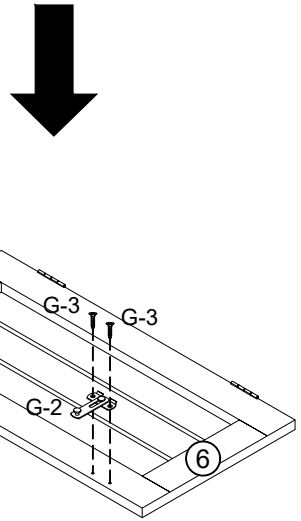
G-3
G-3
G-2
G-3
G-3
G-2
6

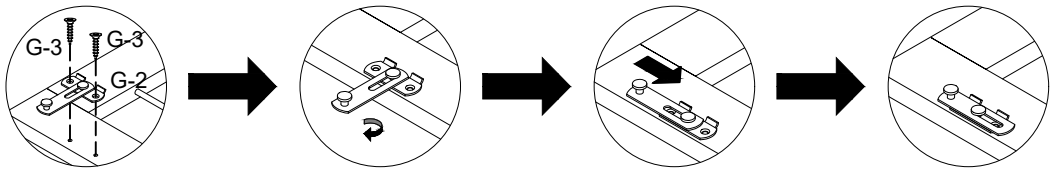
G-3
G-3
G-2

8

C	
M3x16mm	x6

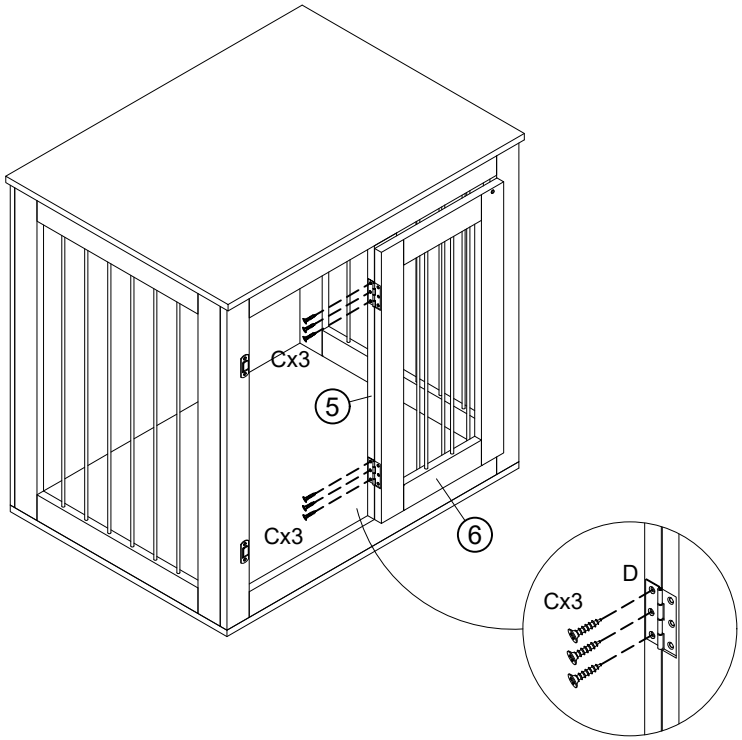

9

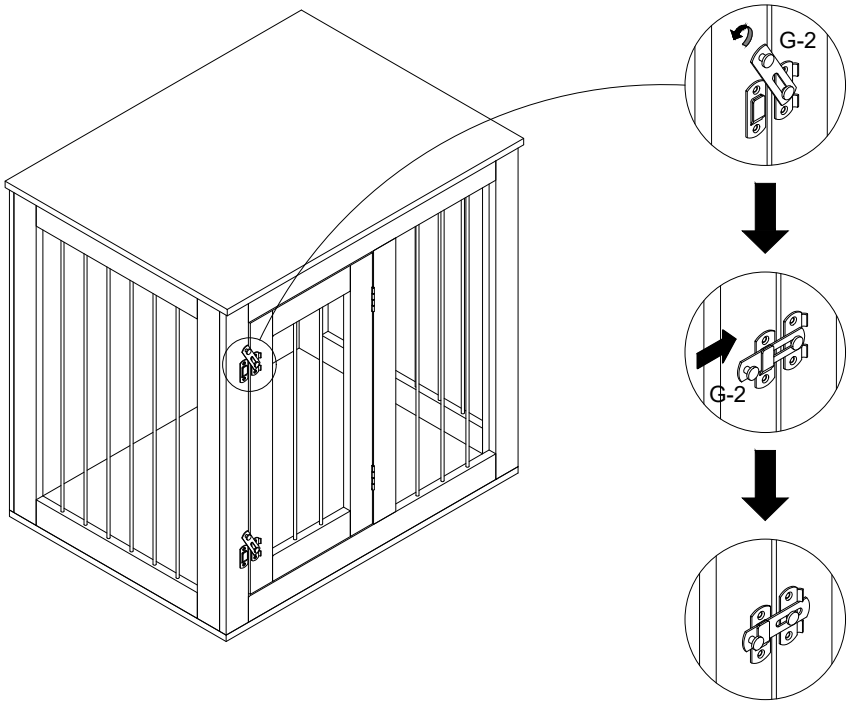

10

A	
M6x35mm	x14
C	
M3x16mm	x1
E	
M6x35mm	x1

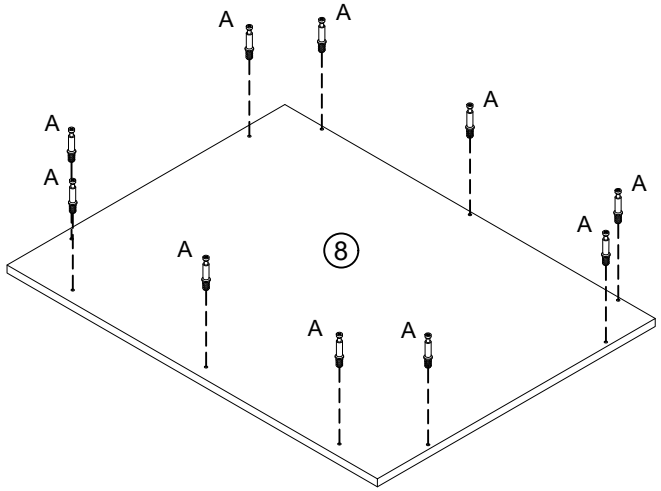

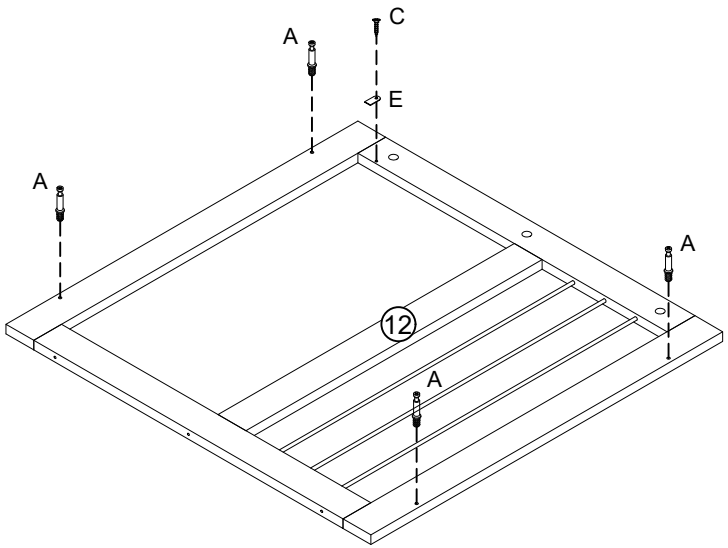

11

B	M15x10mm x4
F	M7x50mm x4
I	x1

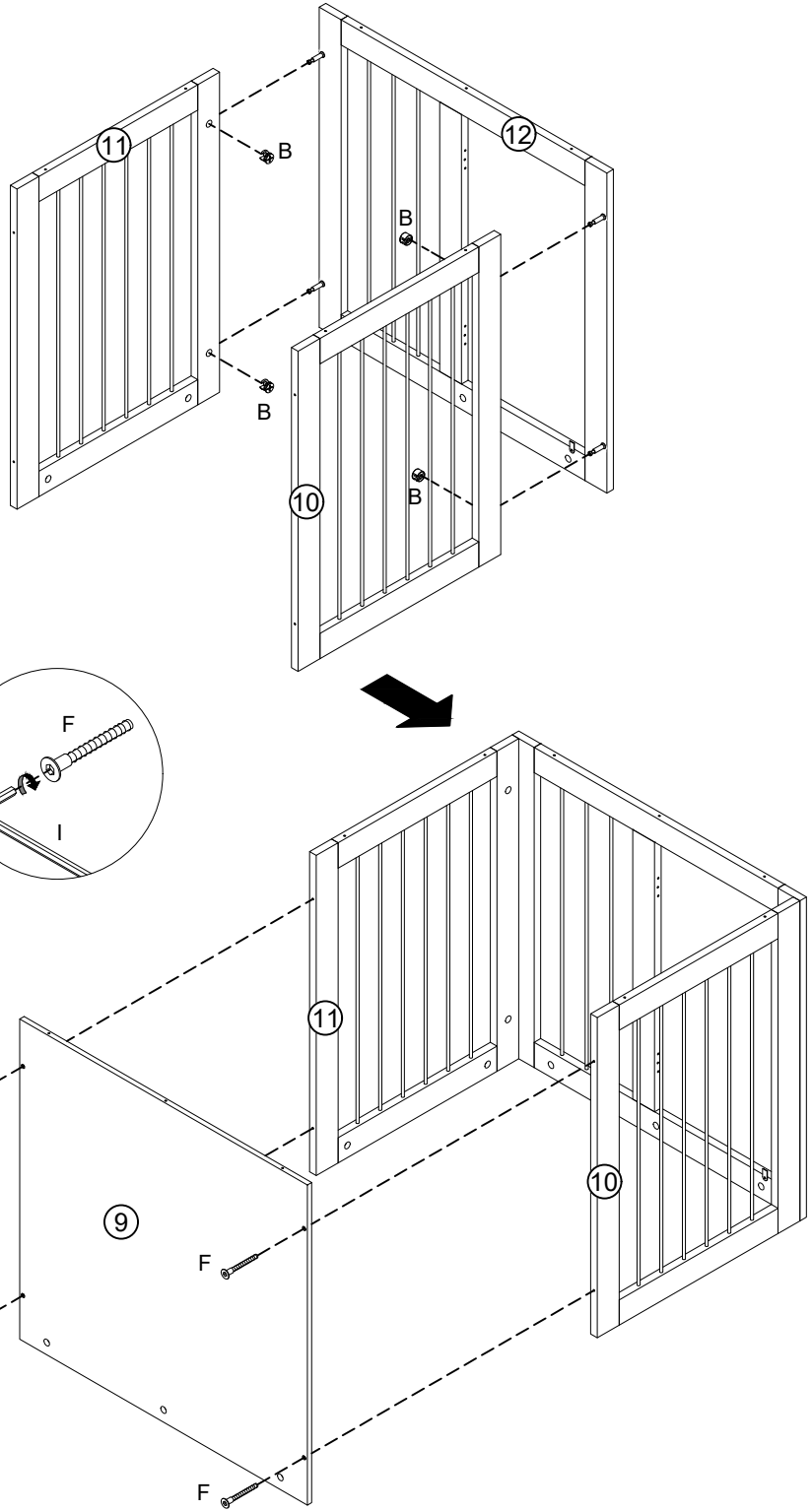

12

B	M15x10mm x10

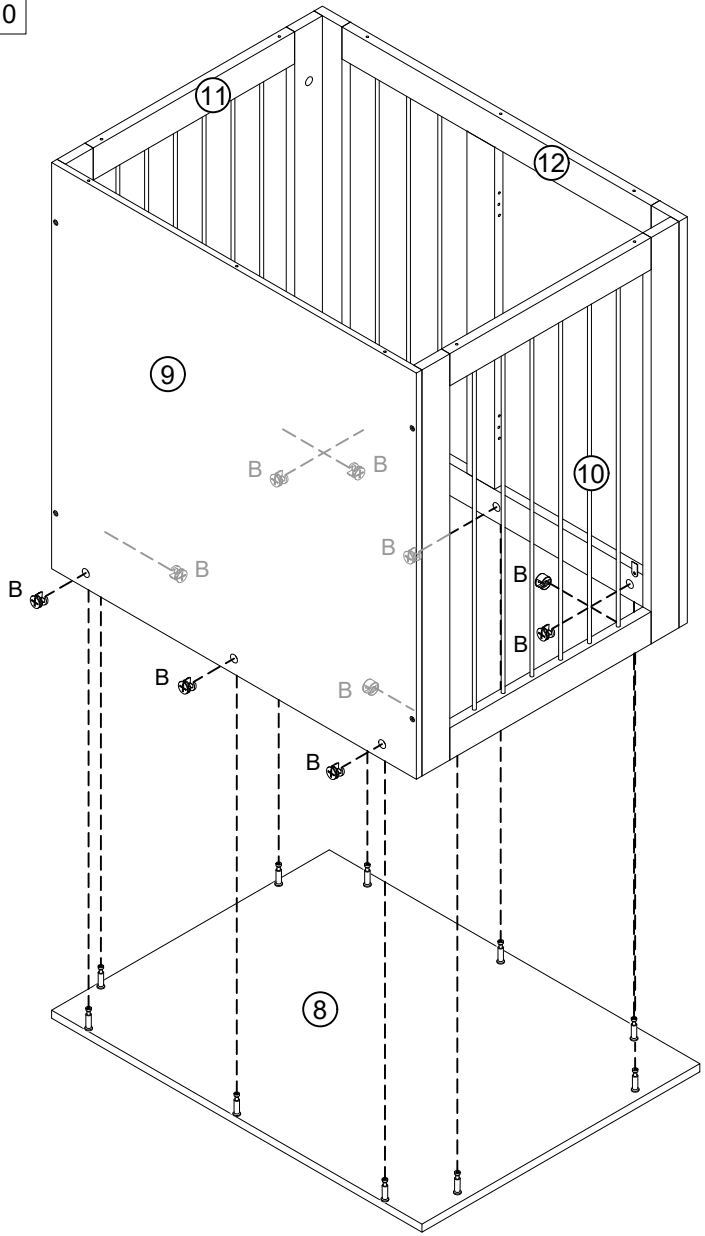

13

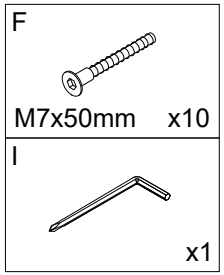

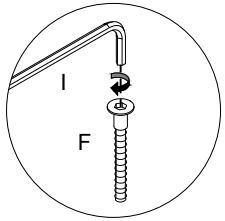

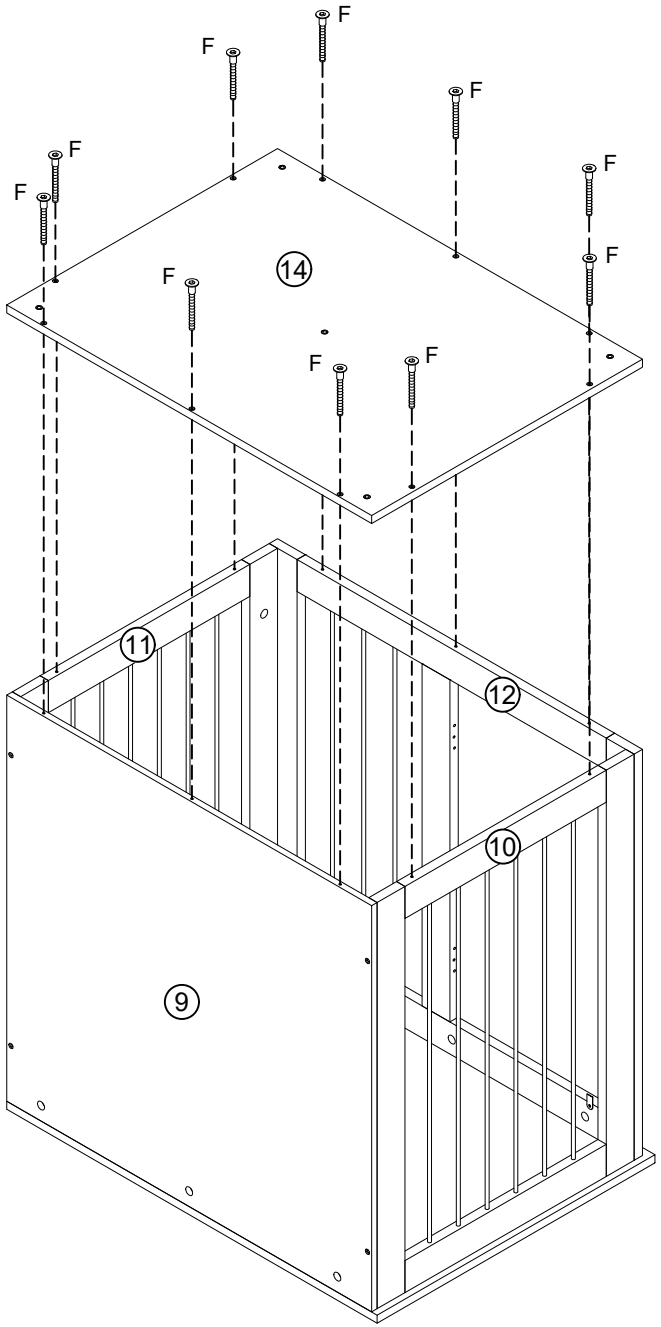

14

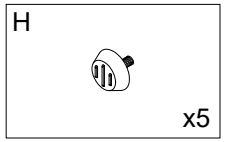

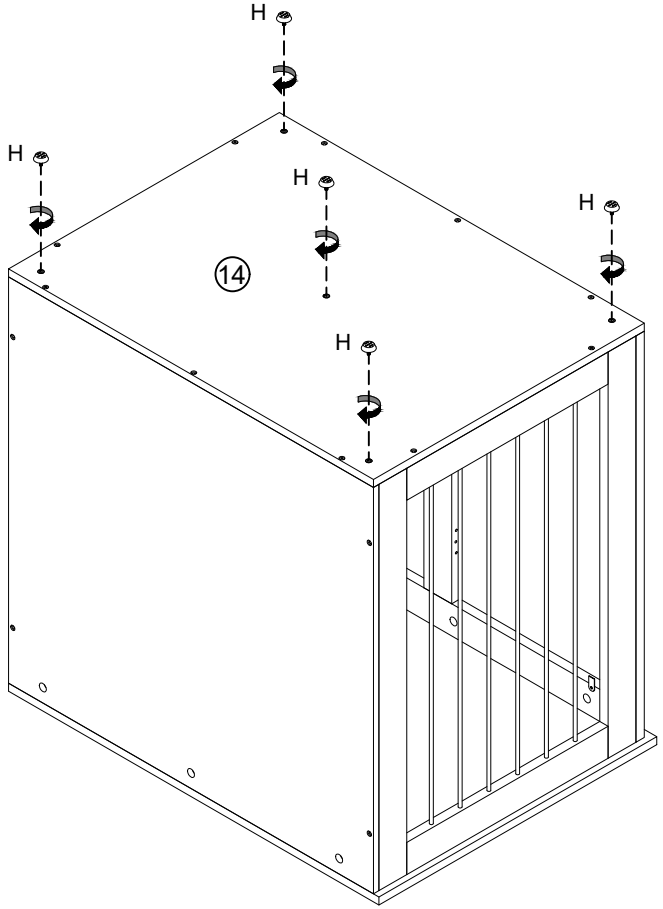

15

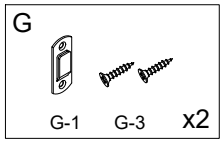
G
G-1
G-3
x2

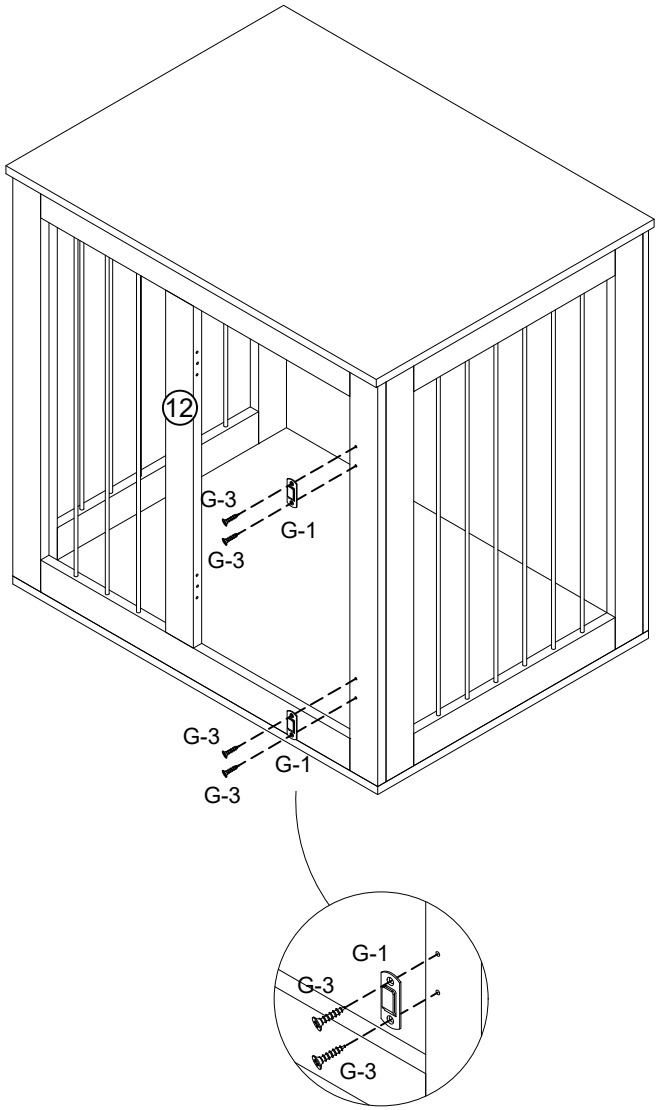
12
G-3
G-1
G-3
G-3
G-1
G-3
G-1
G-3
G-3

16

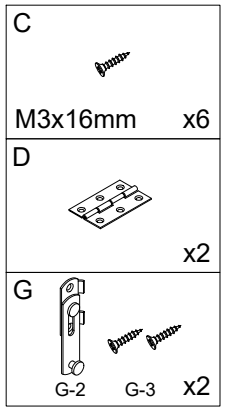
C
M3x16mm
x6
D
x2
G
G-2
G-3
x2

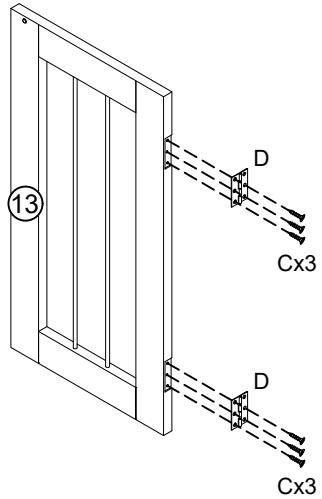
13
D
Cx3
D
Cx3

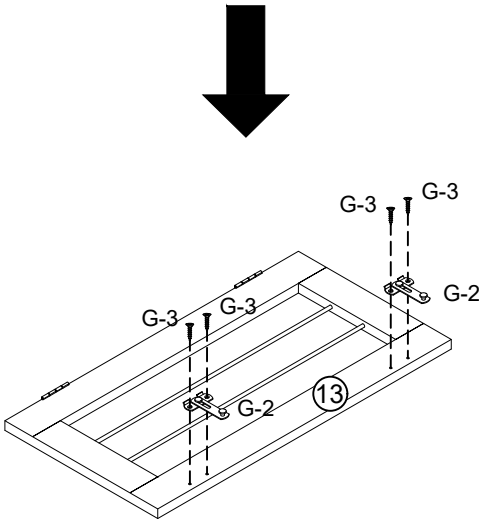
G-3
G-3
G-2
G-3
G-3
G-2
13

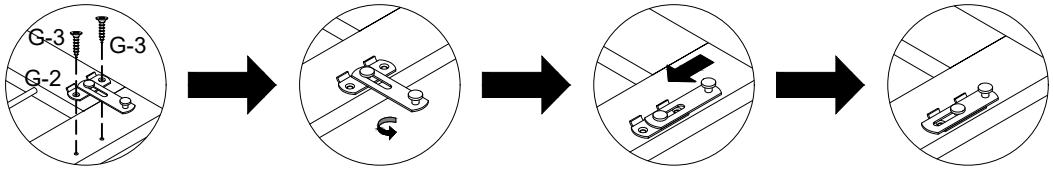
G-3
G-3
G-2

17

C

M3x16mm x6

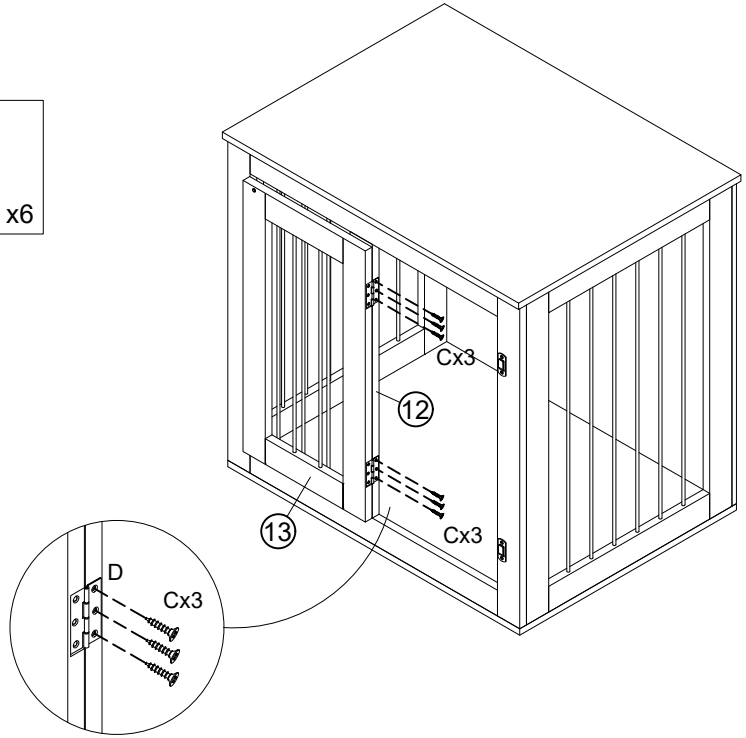

18

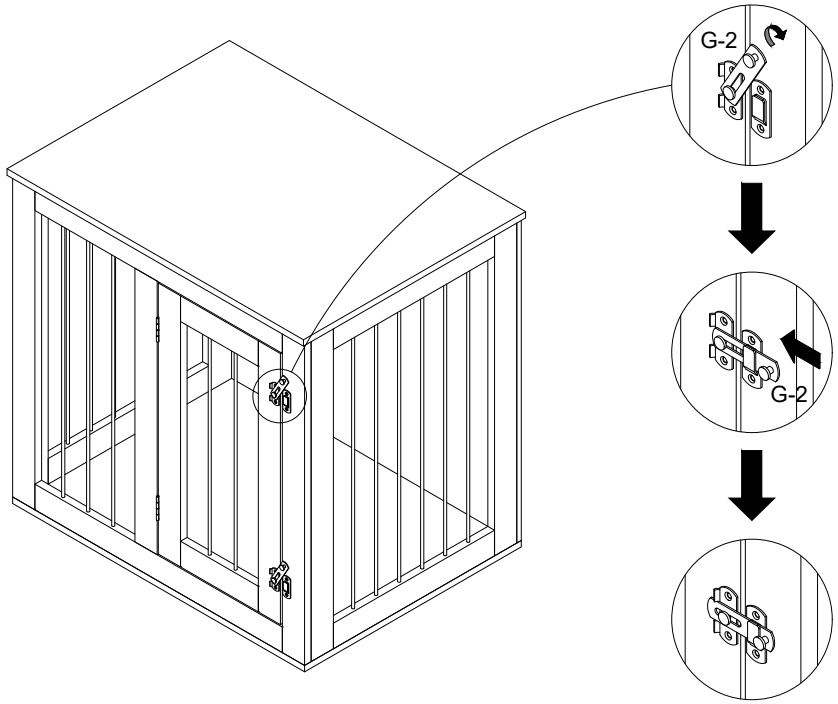

19

A

M6x35mm x11

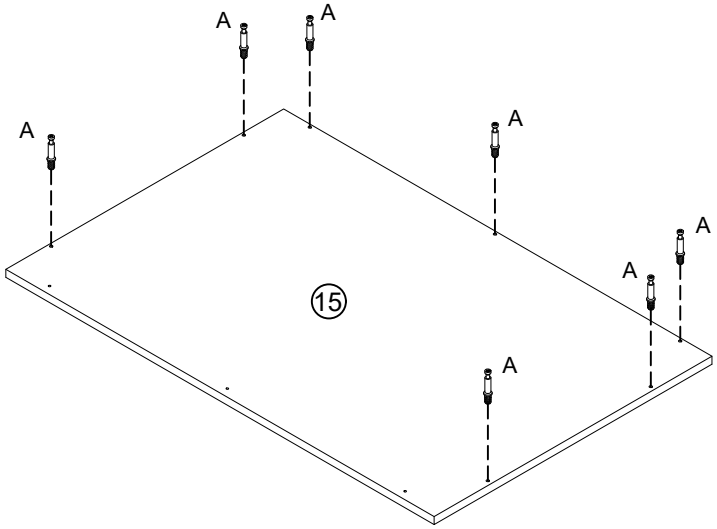

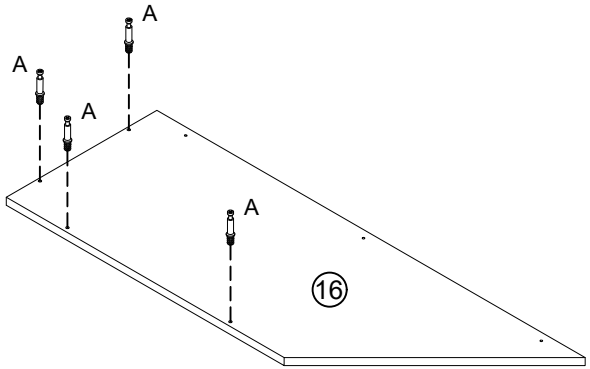

20

K	x3
L	M3.5x12mm x6

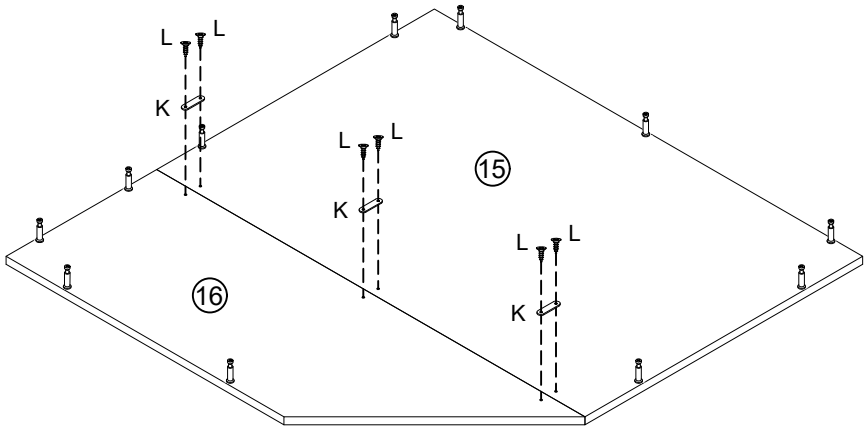

21

D	x4
J	M3x14mm x12

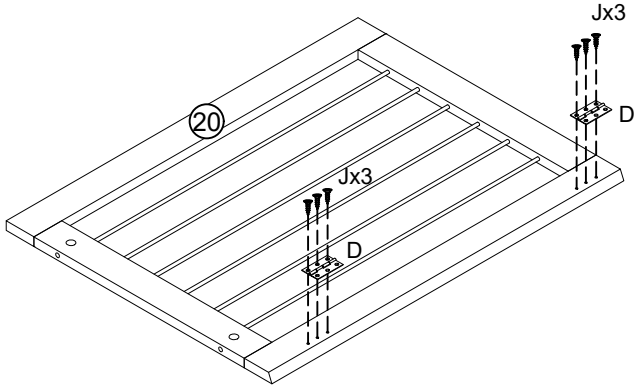

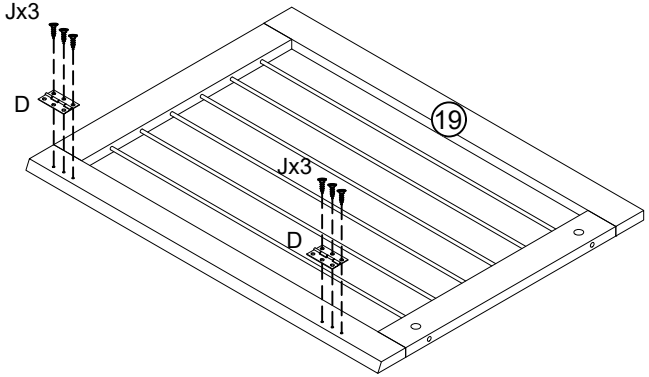

22

C	M3x16mm	x1
E	M6x35mm	x1
G	G-1 G-3	x2

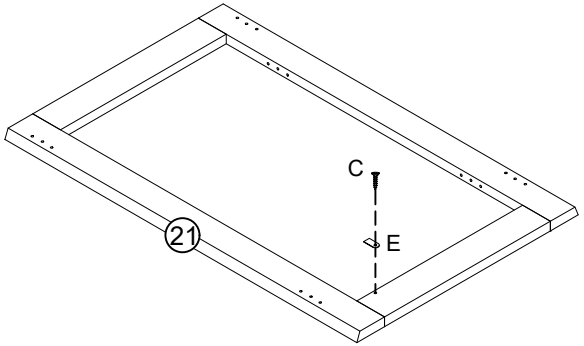

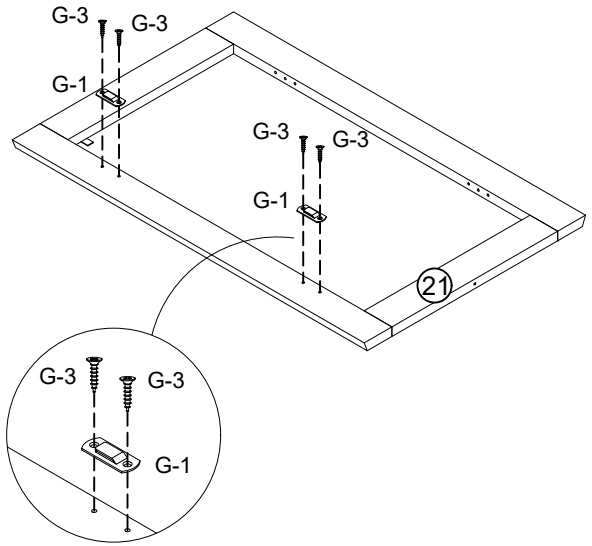

23

B	M15x10mm	x4

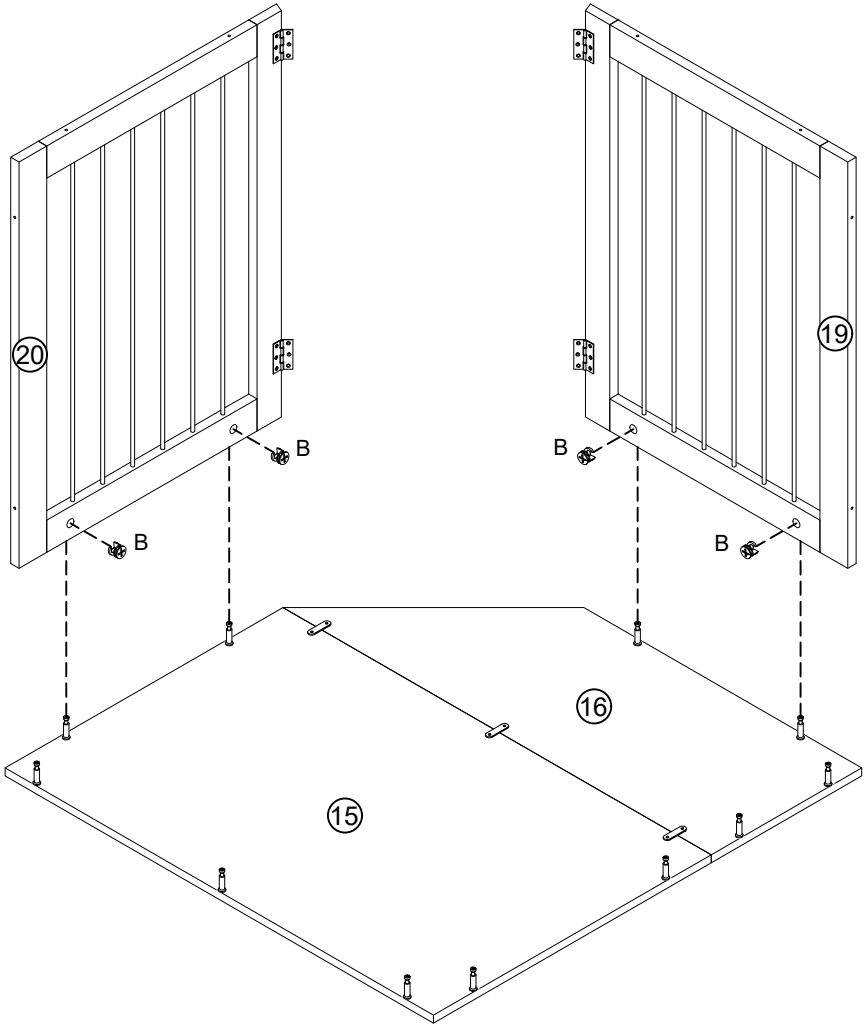

24

J

M3x14mm x12

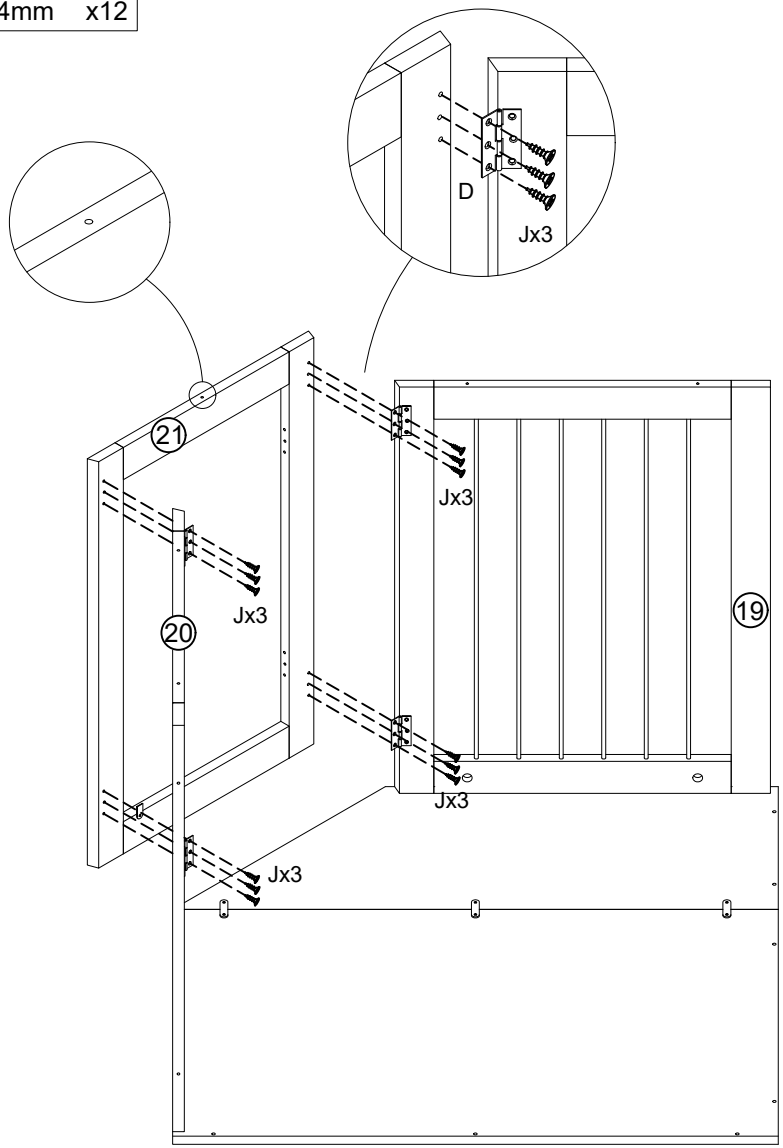

25

B

M15x10mm x7

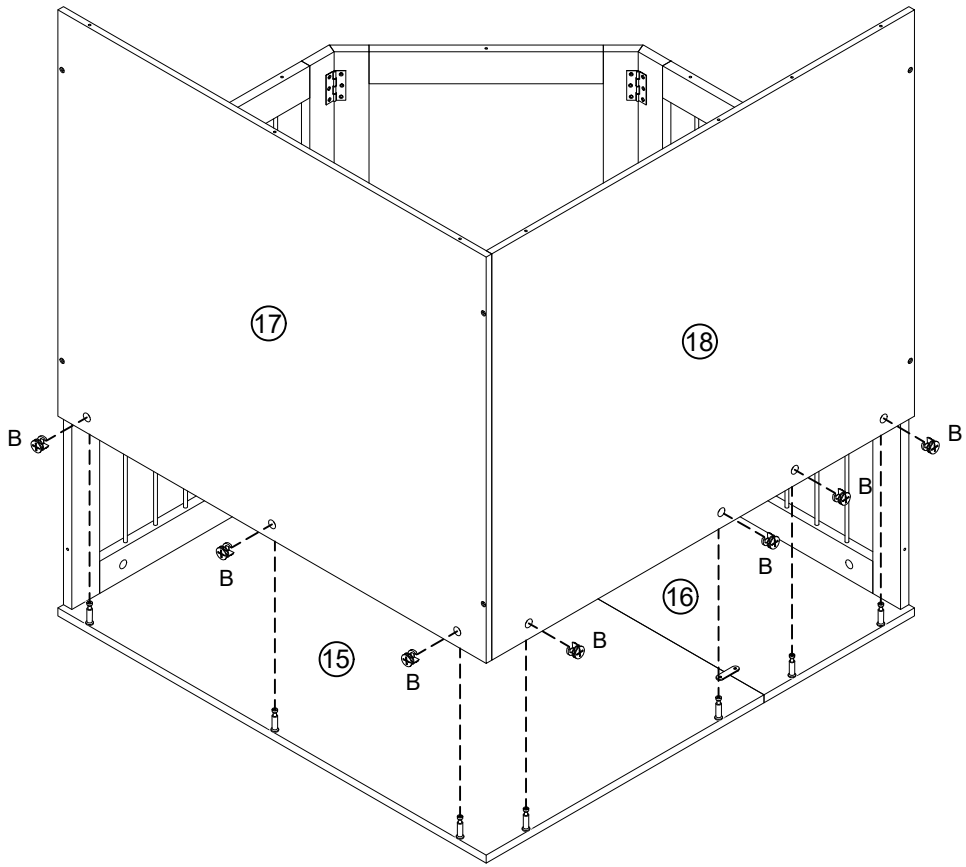

26

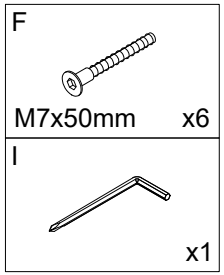
F
M7x50mm x6
I
x1

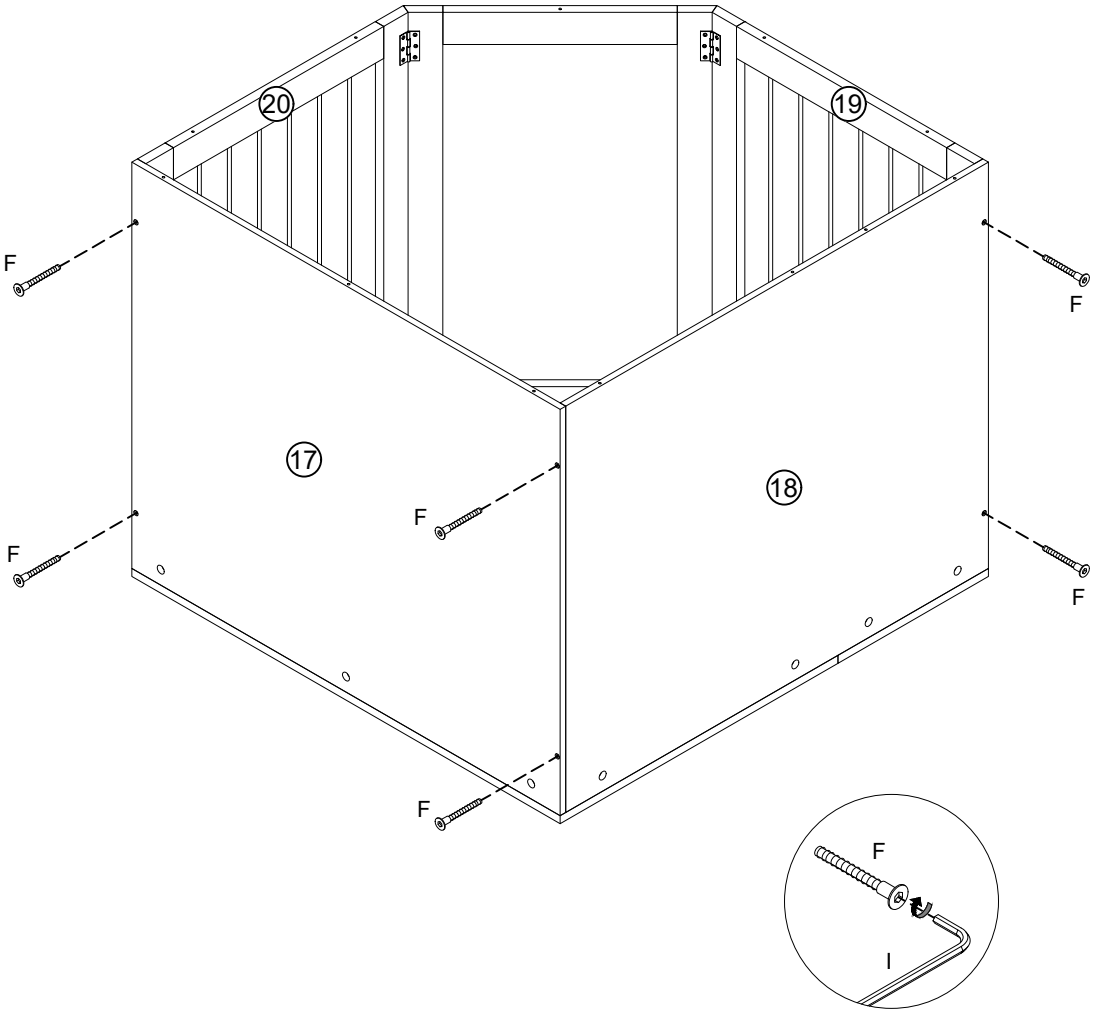
20
19
F
F
17
18
F
F
F
F
F
I

27

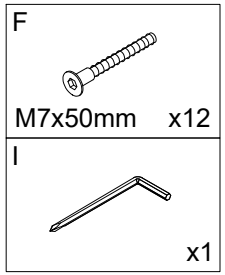
F
M7x50mm x12
I
x1

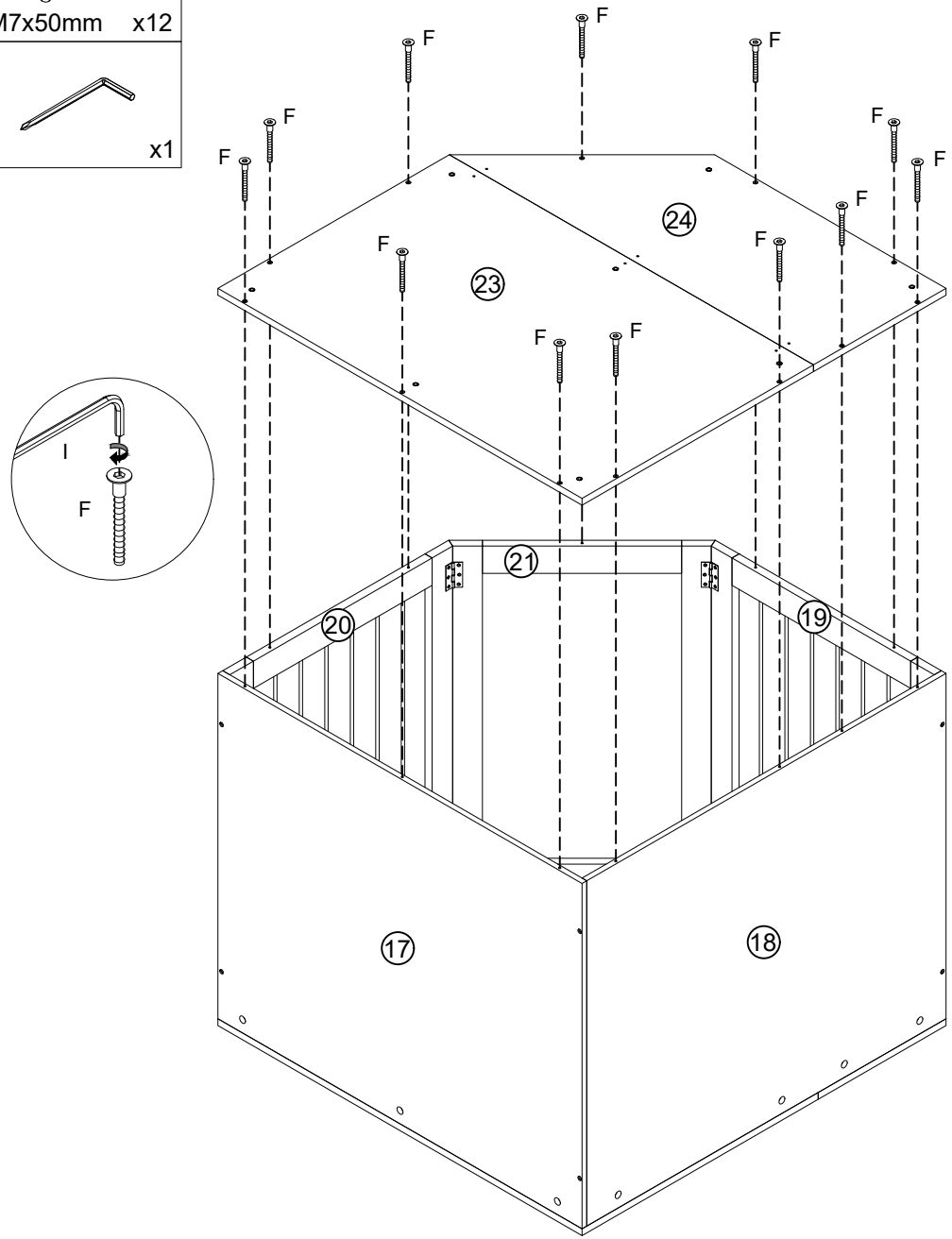
F
24
23
I
F
21
20
19
17
18

28

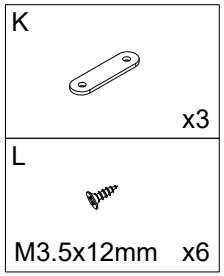

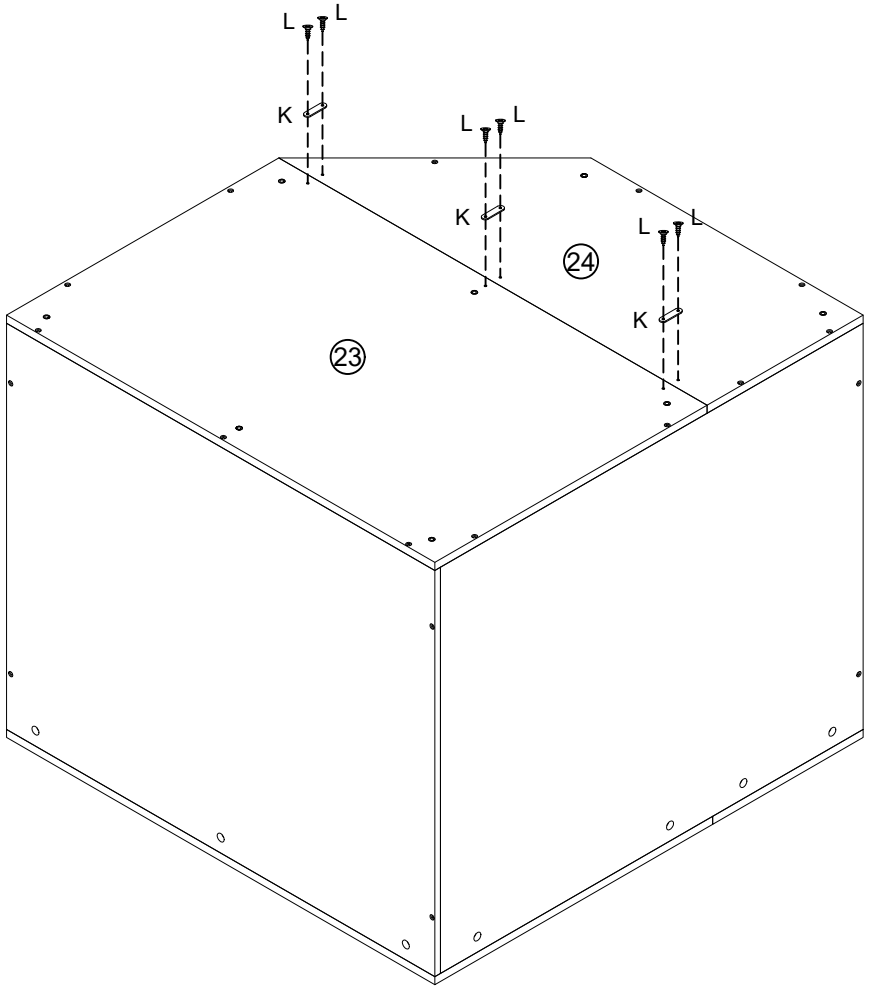

29

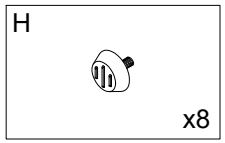

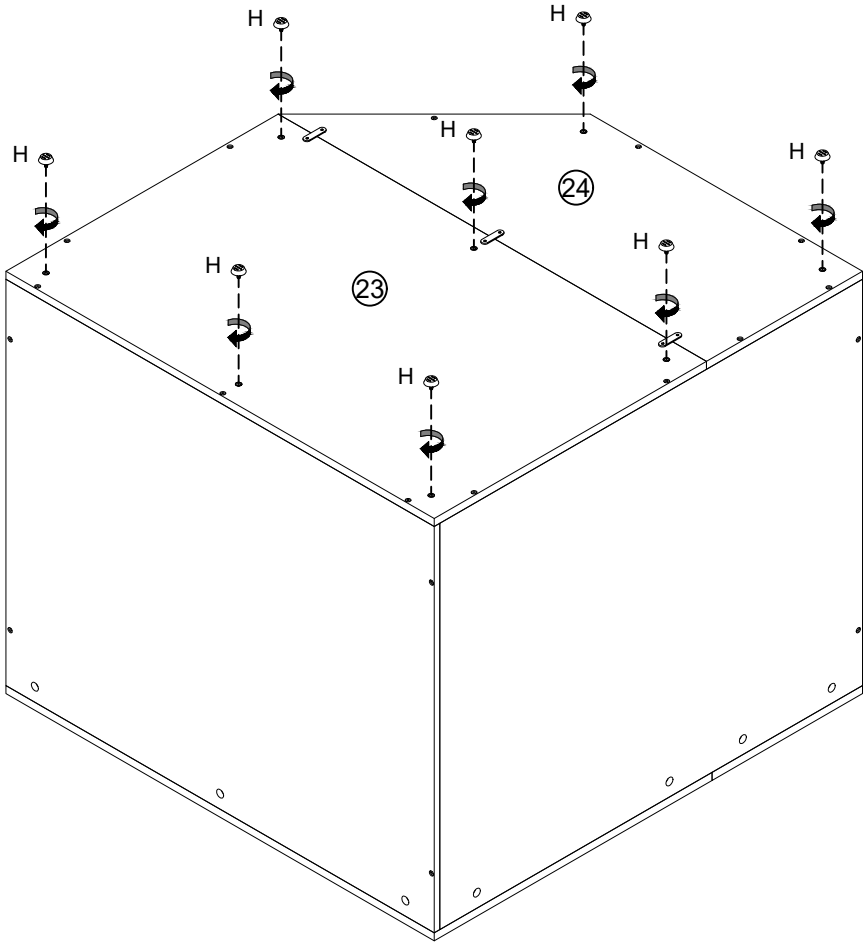

30

C	M3x16mm x6
D	x2
G	G-2 G-3 x2

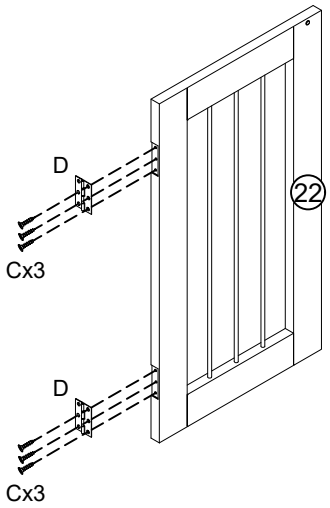

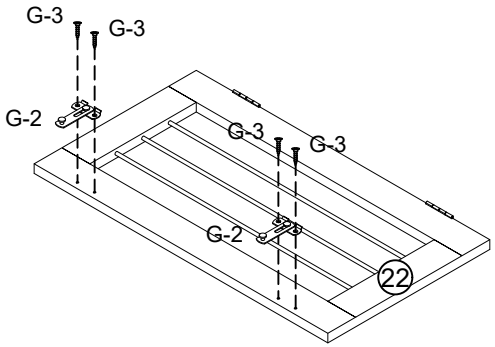

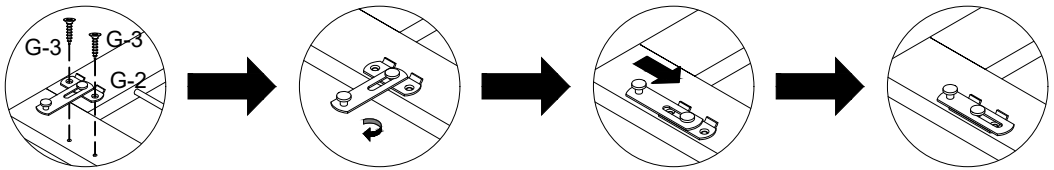

31

C	M3x16mm x6

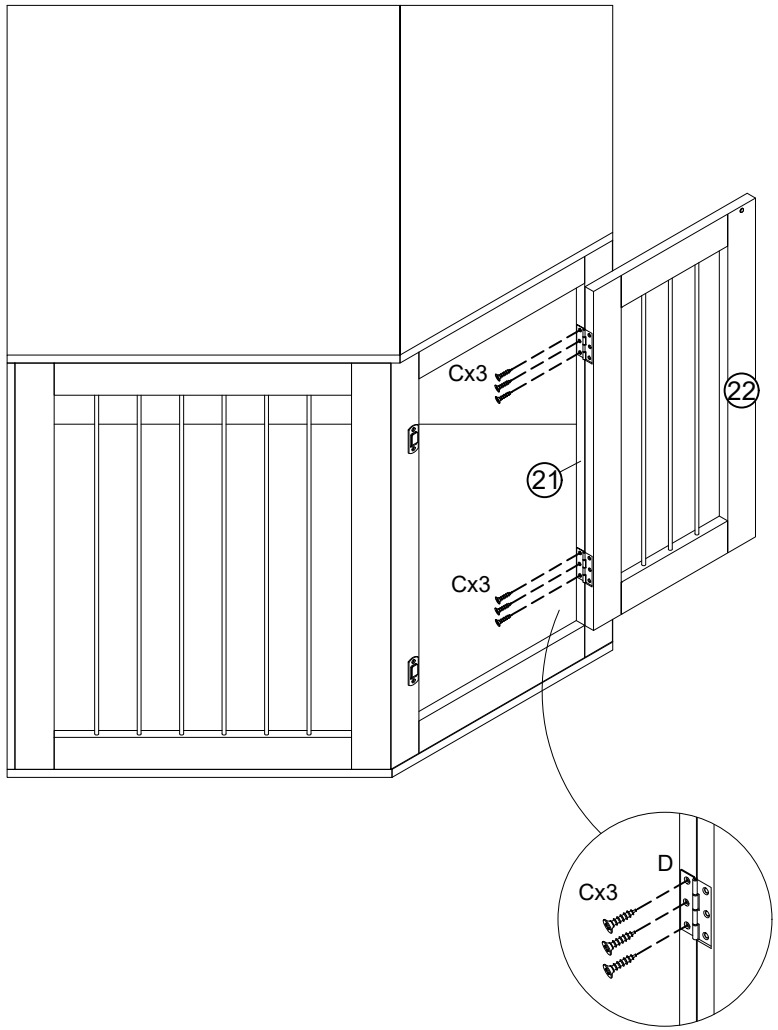

32

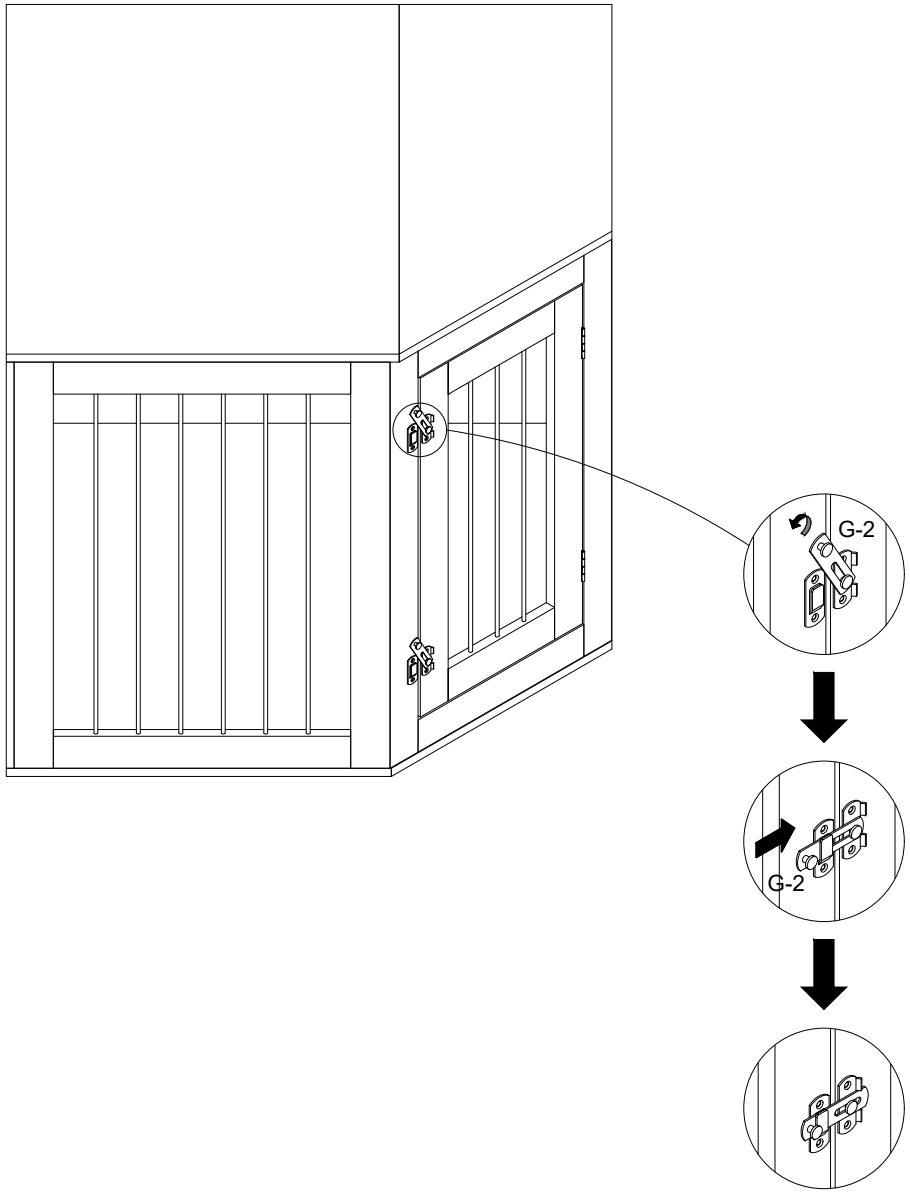
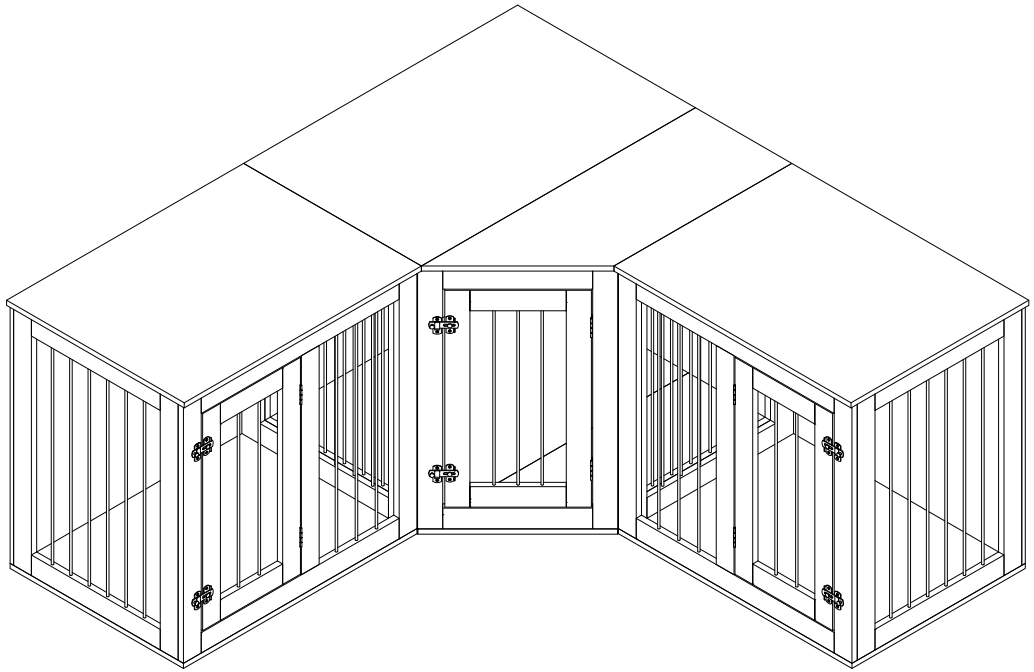
33