Alina

S47619



DESCRIPTION

With a striking sense of symmetry and light play, Alina captures the allure of sculptural precision. Cascading tiers of Optic Crystal bars are encircled by laser-cut metal bands with a signature square motif. Its pyramid form radiates contemporary elegance, while each crystal refracts light in dazzling layers of brilliance.

AVAILABLE TRIM

Optic Crystal (O)

AVAILABLE FINISHES

Heirloom Gold (-22)

French Gold (-26)

Antique Silver (-48)

Ferro Black (-59)

Heirloom Bronze (-76)

LINE DRAWING

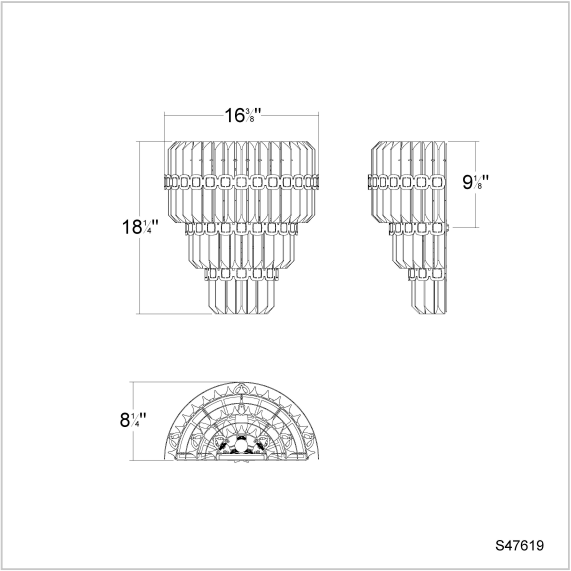

SPECIFICATIONS

Light Source	Incandescent
Standards	UL/cUL

Model	Finish	Crystal	# of Lights	Voltage	Height	Width	Length	Weight
S47619	- 22 - 26 - 48 - 59 - 76	O	6 Light	120V	18.5"	8.5"	16.5"	16lbs

Example: S47619-22O

schonbek.com
Phone (800) 836.1892 | Fax: (518) 563.4228

Headquarters/Eastern Distribution Center
61 Industrial Blvd, Plattsburgh, NY 12901