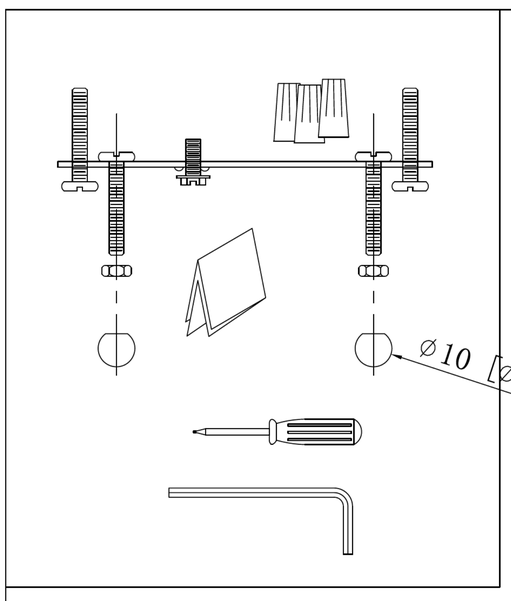
⌀10 [⌀3/8″]

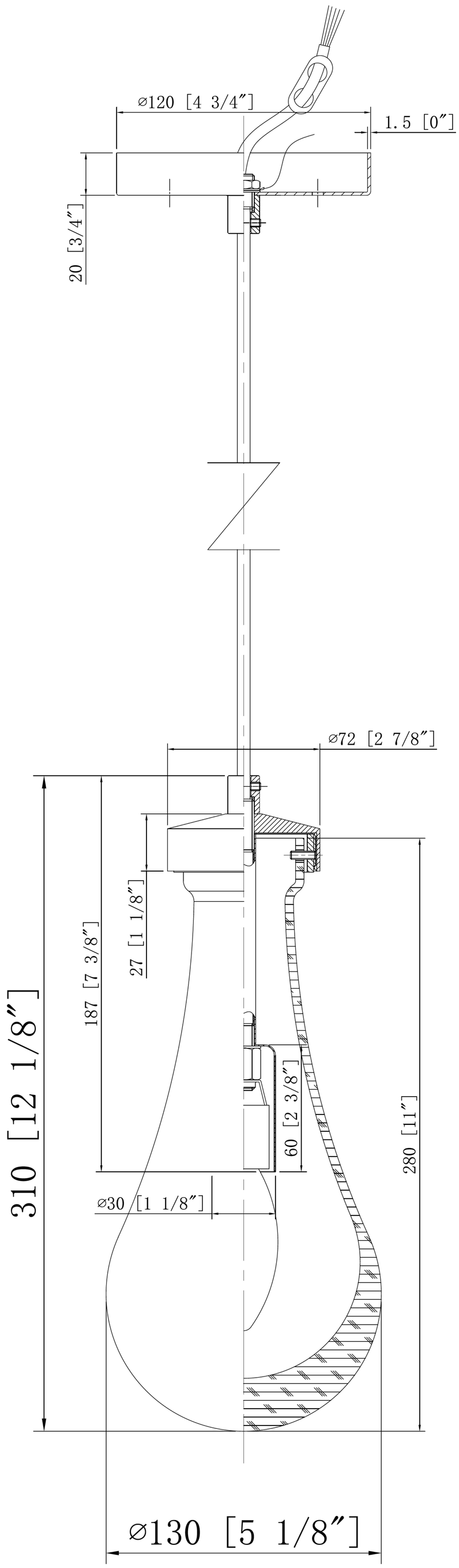
⌀120 [4 3/4″]
1.5 [0″]
20 [3/4″]
⌀72 [2 7/8″]
27 [1 1/8″]
187 [7 3/8″]
310 [12 1/8″]
60 [2 3/8″]
280 [11″]
⌀30 [1 1/8″]
⌀130 [5 1/8″]

ITEM: